BANGYE®

PNEUMATIC EQUIPMENTS

SHANGHAI BANGYE PNEUMATIC AND HYDRAULIC COMPONENTS CO., LTD.

WE SUPPLY SPECIALIZED PNEUMATIC AND HYDRAULIC COMPONENTS

上海邦业气动液压件有限公司

SHANGHAI BANGYE PNEUMATIC AND HYDRAULIC COMPONENTS CO., LTD

地址：中国·上海金山工业区揽工路389号

ADD：NO. 389 Langong Road,Jinshan Industrial Zone,Shanghai,China

电话(TEL)：0086-21-67276363

传真(FAX)：0086-21-67277272

网址(Website)：http://www.sh-bangye.com

E-mail: bangye@sh-bangye.com　　bangyechina@gmail.com

上海邦业气动液压件有限公司

2012版

产品目录

PRODUCT CATALOGS

3



SHANGHAI BANGYE PNEUMATIC AND HYDRAULIC COMPONENTS CO., LTD.

BANGYE®

PNEUMATIC EQUIPMENTS

邦业气动－品质取胜



上海邦业气动液压件有限公司

SHANGHAI BANGYE PNEUMATIC AND HYDRAULIC COMPONENTS CO., LTD.

BANGYE®

上海邦业气动液压件有限公司

SHANGHAI BANGYE PNEUMATIC AND HYDRAULIC COMPONENTS CO., LTD.

公司概况

上海邦业气动液压件有限公司位于国际化、现代化、生态化的高标准综合工业区---上海金山工业区，该园区地处上海市西南、杭州湾北岸、金山区东部、中国经济发展最为蓬勃的长三角经济圈中心位置，四周环绕亭枫高速公路（G1501）、嘉金高速公路（G15）、莘奉金高速（S4），距离上海浦东国际机场和上海虹桥机场分别为58公里和42公里，环境优美、交通便捷。

邦业是一家通过ISO9001：2008国际质量体系认证企业，原名福建省福鼎市亚邦气动液压有限公司，始创于1993年，于2002年从福建搬迁至上海，正式更名为上海邦业气动液压件有限公司。经过十几年来的不断努力、创新，邦业公司创造了“邦业速度”和“邦业奇迹”，已从原来家庭式小规模生产发展成一家集模具设计制造、金属材料压铸、数控攻钻设备精加工、金属表面处理、产品组装等为一体的多元化生产型企业。公司现有员工310人，其中专业技术人员60余人，占地面积30000平方米，建筑面积28000平方米，其中设有商贸大楼、技术研发楼、组装车间、精工车间等多座标准建筑，拥有进口CNC加工中心、电脉冲、线切割、数控车床、数控攻钻等各类数控设备80多台，160T、250T、280T、400T、630T、800T压铸机10余台，以及先进、精密、高效的三坐标测量机等检测设备，公司还引用国际先进的加工技术和管理模式。目前，公司产品已远销意大利、美国、德国、韩国、日本、台湾等国家和地区，并成为国内外各大厂商指定供货商。

邦业公司本着“打造世界一流气动元件生产基地”的奋斗目标；坚信“差异、专业、领先、长远”的生存理念；秉承“诚实守信、质量过硬、价格合理”的经营方针，正朝着现代化、集团化、国际化方向发展。

邦业公司真诚欢迎与社会各界合作互赢、和谐奋进、共同发展！

Company Profile

Located in Jinshan industrial zone, Shanghai, China, an international, modernization, ecological, high-end and integrated industrial zone which lies in the southwest of Shanghai municipality, northern bank of Hangzhou Bay and east of Jinshan District ---the center of the Yangtze River Delta Circle, one of the most vigorous region in China, Shanghai Bangye Pneumatic and Hydraulic Components Co., Ltd. are rounded with Tinglin-Fengjing Expressway (G1501), Jiading - Jinshan Expressway(G15) as well as Xinzhuang - Fenxian - Jinshan Expressway(S4). With beautiful environment and convenient traffic Shanghai Bangye is just 58 kilometer far from Shanghai Pudong International Airport and 42 kilometer far from Shanghai Hongqiao Airport.

Obtaining the ISO9001：2000 certification for quality management system now, Bangye was founded in Fuding City Fujian Province in 1993 named as Yabang Pneumatic and Hydraulic Components Co.,Ltd.and moved to Shanghai renamed as Shanghai Bangye Pneumatic and Hydraulic Components Co.,Ltd.After more than 10 years of continuous efforts and innovation,Bangye has created "Bangy rate" and "Bangye miracle",and changed from a family management workshop to a diversified production enterprise which is integrated with designing and producing the molds,die casting metal alloy material, drill and machining,metal surface treatment and even assembling the pneumatic products of "Bangye" Brand.With 310 employees,including more than 60 professional technicians,Bangye occupies 30,000 Squeal meters (28,000 Squeal meters for building) in new premises composing with many standard constructions, such as Commercial Center, Researching and Developing Building, Molds Producing Workshop, Die Casting and Precise Machining Workshop. Bangye adopts international advanced machining technology and the mode of management and owns more than 60 sets of CNC centers, EDMs,linear cutting machines, drill and cutting lathes and more than 10 sets of die casting machines with 160T、250T、280T、400T、630T、800T, as well as Advanced, sophisticated and efficient inspection equipment CMM.At present, the products are exported to Italy, the United States,Germany Korea, Japan, and Taiwan...Bangye also becomes an appointed supplier of many companies of the pneumatic and hydraulic field in china.

Toward to the Aim of "Creating the World-class Manufacturing Base for the Pneumatic Components", believing in the Company Philosophy of"Diversity, Professional, Keeping Ahead, Foresight", adhering to the Management Policy of "Honest and Trustworthy, Excellent Quality and Reasonable Price", Bangye has been forwarding the direction of modernization, collectivization and internationalization.

Bangye always sincerely welcome all lines of the society to get a harmony and double-win cooperation and development together.



❸ 执行元件
Execute Components



标准气缸DNC系列
STANDARD CYLINDER DNC SERIES
缸径 Cylinder Bore Φ32–125
页码/P1–7



标准气缸DNG系列
STANDARD CYLINDER DNC SERIES
缸径 Cylinder Bore Φ32–320
页码/P8–18



标准气缸SU系列
STANDARD CYLINDER SU SERIES
缸径 Cylinder Bore Φ32–100
页码/P19–25



标准气缸SC系列
STANDARD CYLINDER SC SERIES
缸径 Cylinder Bore Φ32–100
页码/P26–36



标准气缸MB系列
STANDARD CYLINDER MB SERIES
缸径 Cylinder Bore Φ32–200
页码/P37–46



不锈钢迷你气缸MI系列
STAINLESS STEEL MINI CYLINDER MI SERIES
缸径 Cylinder Bore Φ8–25
页码/P47–54



标不锈钢迷你气缸MF系列
STAINLESS STEEL MINI CYLINDER MF SERIES
缸径 Cylinder Bore Φ20–40
页码/P55–66



铝合金迷你气缸MAL系列
ALUMINIUM ALLOY MINI CYLINDER MAL SERIES
缸径 Cylinder Bore Φ16–63
页码/P67–81



紧凑型气缸ADN系列
COMPACT CYLINDER ADN SERIES
缸径 Cylinder Bore Φ12–125
页码/P82–97



超薄气缸SDA系列
COMPACT CYLINDER SDA SERIES
缸径 Cylinder Bore Φ12–100
页码/P98–113



超薄气缸CQ系列
COMPACT CYLINDER CQ SERIES
缸径 Cylinder Bore Φ12–100
页码/P114–128



双轴气缸TN系列
DOUBLE ROD CYLINDER TN SERIES
缸径 Cylinder Bore Φ10–32
页码/P129–136

❸ 执行元件
Execute Components



滑台气缸STM系列
SLIDE CYLINDER STM SERIES

缸径 Cylinder Bore Φ10–25

页码/P137–149



夹紧气缸CK系列
CLAMPING CYLINDER CK SERIES

缸径 Cylinder Bore Φ40–80

页码/P150–153



旋转夹紧缸SCR(L)系列
ROTARY CLAMPING CYLINDER SCR(L) SERIES

缸径 Cylinder Bore Φ20–63

页码/P154–157



气压转角下压缸HSR(L)系列
SWING CLAMP CYLINDER HSR(L) SERIES

缸径 Cylinder Bore Φ25–63

页码/P158–160

安装与使用/Install&use

- 工作中负载有变化，应选用输出力充裕的气缸，在高温条件下，应选用相应的耐高温气缸。
  The load would be changed during working process,so the cylinder with enough output force should be chosen ,on the case of high temperature, operator is suggested to choose the cylinder with high-temp seals!
- 气缸配管前，必须清除管道内的杂物，防止杂物进入气缸内。
  Before put in the air tube on the cylinder ,the inside surface of the pipe must be cleaned .In order to prevent sundries from entering into cylinder.
- 气缸使用介质应经过40μm以上滤芯过滤后方可使用。
  The medium used by cylinder can not be put into use until it has pass filtering by certain filtering element above 40um.
- 在低温环境下，应采取抗冻措施，防止系统的水分结冰。
  Under condition of low temperature ,the anti-freezing measure must be adopted ,so as to avoid freezing of engineering system.
- 气缸使用前经空载试运转，运转前将缓冲调至最小，逐步放松，以免产生过大冲击而损害气缸。
  The idling test should be done before operating of cylinder, before test the cushion screw must be adjusted to the minimum, then increased gradually ,so as to avoid super-large shock and break the cylinder!
- 气缸在工作过程中应尽可能避免受侧向负载，以维持气缸的正常工作和使用寿命。
  During the working process ,the cylinder should be avoid side-load,in order to maintain normal working and assure the lifetime of the cylinder.
- 气缸拆下长时间不使用，要注意表面防锈，进排气口应加防尘堵塞帽。
  If the cylinder has been out of work for a long time ,operator should take notice of surface rustproof,the dust proof cap is suggested to be added at air in and out hole .

气缸理论出力计算方法/Formula for cylinder output power

$$F = P \times A$$

- A：活塞受压面积/Piston pressed area (cm^2)
- P：工作压力/Working pressure (Kgf/cm^2)
- F：气缸理论出力/The output power of cylinder (Kgf)

气缸理论出力表/Table for theoretic power of a cylinder

气缸内径 Cylinder ID	活塞杆外径 Out diameter of piston rod	动作方式 Action type		受压面积 Pressure area (cm^2)	空气压力/Air pressure (Kgf/cm^2)								
					1	2	3	4	5	6	7	8	9
32	12	复动型 Double action	压侧 Push side	8.04	8.04	16.08	24.12	32.16	40.20	48.24	56.28	64.32	72.36
			拉侧 Pull side	6.90	6.90	13.80	20.70	27.60	34.50	41.40	48.30	55.20	62.10
40	16	复动型 Double action	压侧 Push side	12.56	12.56	25.12	37.68	50.24	62.80	75.36	87.92	100.24	113.04
			拉侧 Pull side	10.55	10.55	21.10	31.65	42.20	52.75	63.30	73.85	84.40	94.95
50	20	复动型 Double action	压侧 Push side	19.63	19.63	39.26	58.89	78.52	98.15	117.78	137.41	157.04	176.67
			拉侧 Pull side	16.49	16.49	32.98	49.47	65.96	82.45	98.94	115.43	139.92	148.41
63	20	复动型 Double action	压侧 Push side	31.17	31.17	62.34	93.51	124.68	155.85	187.02	218.19	249.36	280.53
			拉侧 Pull side	28.03	28.03	56.06	84.09	112.12	140.15	168.18	196.21	224.24	252.27
80	25	复动型 Double action	压侧 Push side	50.26	50.26	100.52	150.78	201.04	251.30	301.56	351.82	402.08	452.34
			拉侧 Pull side	45.36	45.36	90.72	136.08	181.44	226.80	272.16	317.52	362.88	408.24
100	25	复动型 Double action	压侧 Push side	78.53	78.53	157.06	235.59	314.12	392.65	471.18	428.82	628.24	706.77
			拉侧 Pull side	71.47	71.47	142.94	214.41	285.88	357.35	428.82	500.29	571.76	643.23
125	32	复动型 Double action	压侧 Push side	122.72	122.72	245.44	368.16	490.88	613.60	736.32	859.04	981.76	1104.48
			拉侧 Pull side	114.68	114.68	229.36	344.04	458.72	573.40	688.08	802.76	917.44	1032.12

BY-DNC系列/BY-DNC SERIES

产品特性/Product features

免润滑/Free of lubrication

采用含油轴承，使活塞杆无需加油润滑。
Oil bearing is adopted so the piston rod do not need to be lubricated.

缓冲性/Cushion

除带固定缓冲外，气缸终端还带可调缓冲，
使气缸换向时平稳无冲击。
Besides fixed buffer,the cylinder terminal has adjustable cushion screw,so that the cylinder enters into stably without impact during commute direction .

耐高温性/High temperature available

可采用耐高温密封材料，使气缸在150摄氏度
高温条件下正常工作(客户需向本公司订作)。
Adopted of special sealing material ,the cylinder can work normally at 150 degree (user should order it from us).

安装型式多样/Various mounting type

多种安装附件供客户选择。
Various mounting accessories are supplied.

附磁性/Magnetic property

气缸活塞上装有一个永久磁铁，它可触发安装
在气缸上的磁性开关来感测气缸的运动位置。
The cylinder piston is equipped with a permanent magnet that can trigger the magnetic switch of the cylinder to detect the moving position of cylinder.



符 号/Symbol

DNC



DNC-S



规 格/Specification

内径/Bore (mm)	32	40	50	63	80	100	125
动作型式/Action type	复动型/Double action						
工作介质/work medium	空 气/Filtered air						
使用压力范围/Operation pressure range(Kgf/cm²)	1～9.0						
保证耐压力/Proof pressure(Kgf/cm²)	13.5						
使用温度范围/Available temperature ℃	-5～70						
使用速度范围/Operation speed (mm/s)	50～800						
缓冲型式/Cushioning	可调缓冲/Adjustable cushioning						
缓冲行程/Cushioning travel (mm)	20		22		32		35
接管口径/Port size	G1/8"	G1/4"		G3/8"		G1/2"	

行 程/Travel

内径/Bore(mm)	标准行程/Standard travel	最大行程/Max travel	容许行程/Available travel
32	25 50 75 80 100 125 150 160 175 200 250 300 350 400 450 500	1000	2000
40	25 50 75 80 100 125 150 160 175 200 250 300 350 400 450 500	1200	2000
50	25 50 75 80 100 125 150 160 175 200 250 300 350 400 450 500	1200	2000
63	25 50 75 80 100 125 150 160 175 200 250 300 350 400 450 500	1500	2000
80	25 50 75 80 100 125 150 160 175 200 250 300 350 400 450 500	1500	2000
100	25 50 75 80 100 125 150 160 175 200 250 300 350 400 450 500	1500	2000
125	25 50 75 80 100 125 150 160 175 200 250 300 350 400 450 500	1500	2000

※ 特殊行程请与本公司联系/Special travel should checked with our factory.

BY-DNC系列/BY-DNC SERIES

内部结构及主要零件材质/Inner structure and material list for main parts

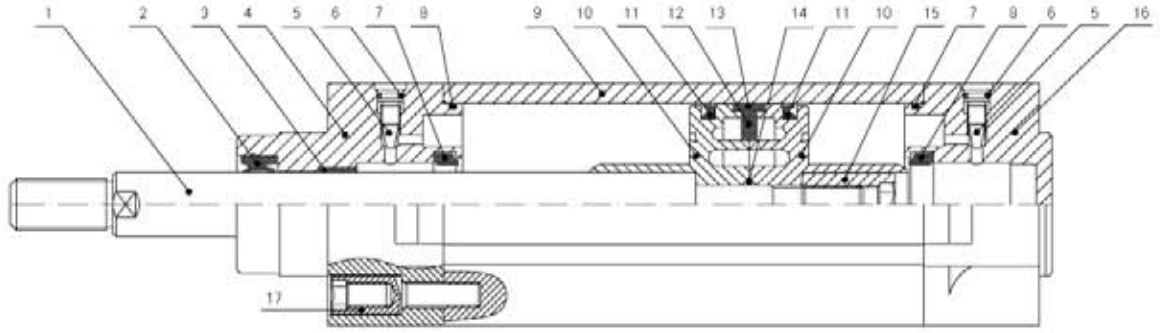

序号/No	名称/Name	材质/Carbon brass	序号/No	名称/Name	材质/Carbon brass
1	活塞杆/Piston rod	碳钢/Carbon steel	10	活塞/Piston	铝合金/Aluminium alloy
2	防尘圈/Anti dust seals	PU	11	活塞圈/Piston ring	NBR
3	含油轴承/Oil bearing	铜基粉末合金/Sintered bronze	12	磁环/Magnet	铁氧体/Ferrite
4	前端盖/Front cover	铝合金/Aluminium alloy	13	导向带/Wearing ring	POM
5	针阀/Air cushioning screw	黄铜/Brass	14	轴芯垫/O-ring for piston and piston rod	NBR
6	针阀O型圈/O-ring for air cushioning screw	NBR	15	活塞螺帽/Nut for piston	碳钢/Carbon steel
7	缓冲圈/Cushioning seals	NBR	16	后端盖/Back cover	铝合金/Aluminium alloy
8	管壁O型圈/O-ring for front cover	NBR	17	拉杆螺丝/Pull rod screw	碳钢/Carbon steel
9	缸筒/Tube	铝合金/Aluminium alloy			

订购码/Ordering code

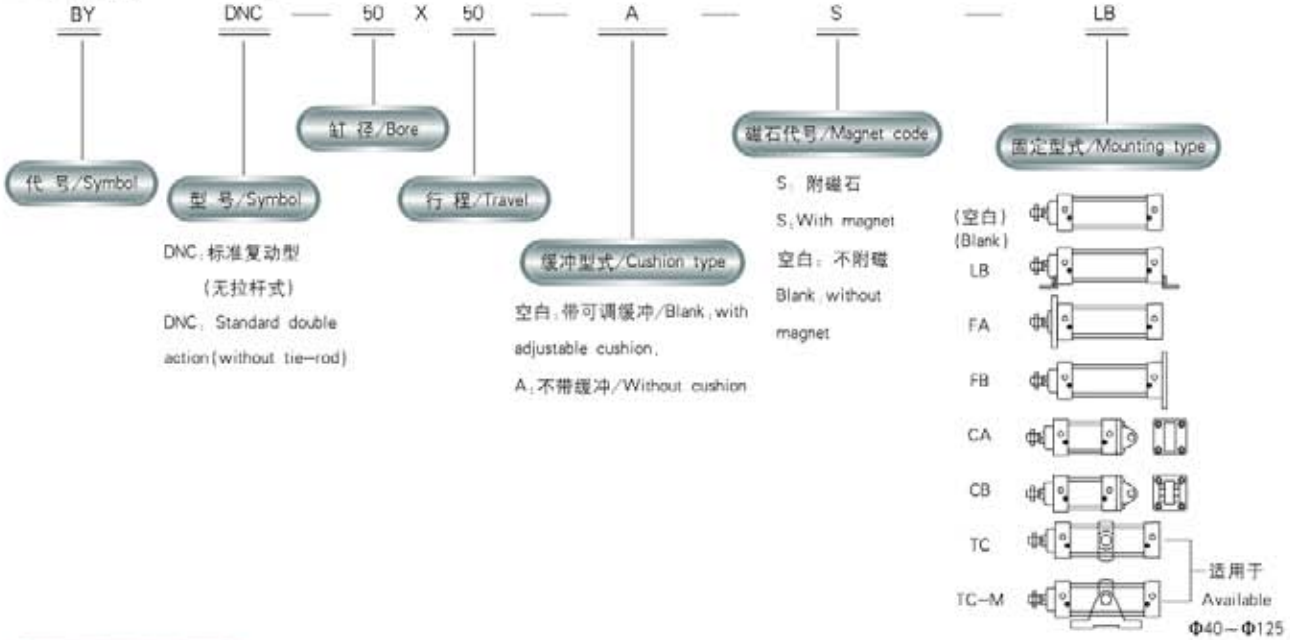

举例/Sample

1）欲订购缸径为50mm，行程为50mm，附磁，采用前后法兰固定型式带可调缓冲的ISO15552标准复动型气缸，其正确的订购代号为：BY-DNC-50X50-S-FA-FB

1）If user needs bore 50mm and 50mm travel with magnet,front and rear flange fixed type also include adjustable cushion ISO15552 standard double action cylinder, the correct order code is: BY-DNC-50X50-S-FA-FB

2）欲订购缸径为63mm，行程为80mm，不附磁，采用基本型固定型式不带缓冲的ISO15552标准复动型气缸，其正确的订购代号为：BY-DNC-63X80-A

2）If user needs bore 63mm and 80mm travel, without magnet, and basic fixed type, without cushion, ISO15552standard double action cylinder, the correct order code is: BY-DNC-63X80-A

BY–DNC系列/BY–DNC SERIES

基本尺寸/Basic specification

Φ32~Φ125

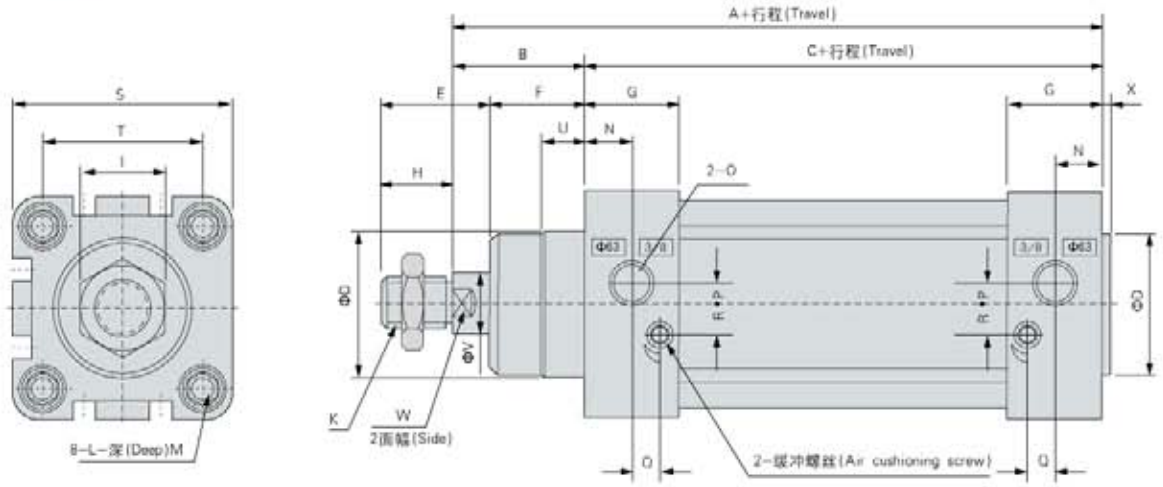

内径/符号(Bore/Symbol)	A	B	C	D	E	F	G	H	I	K	L
32	120	26	94	30	30	18	25.1	22	17	M10 x 1.25	M6
40	135	30	105	35	32.5	21.5	29.6	24	17	M12 x 1.25	M6
50	143	37	106	40	41	28	29.6	32	23	M16 x 1.5	M8
63	158	37	121	45	40.5	28.5	35.6	32	23	M16 x 1.5	M8
80	174	46	128	45	51.3	34.7	35.9	40	26	M20 x1.5	M10
100	189	51	138	55	52.8	38.2	38.8	40	26	M20 x1.5	M10
125	225	65	160	60	73	46	45	54	41	M27X2	M12

内径/符号(Bore/Symbol)	M	N	O	P	Q	R	S	T	U	V	W	X
32	9.5	12.6	G1/8	5.5	5.5	7.1	45	32.5	10	12	10	4
40	9.5	14.6	G1/4	6	7	7.5	54	38	10	16	13	4
50	9.5	14.6	G1/4	8.5	4.5	8.5	64	46.5	11.5	20	17	4
63	9.5	18.1	G3/8	10	2	12	75	56.5	15	20	17	4
80	11.5	17.9	G3/8	12.7	1	8	93	72	15.7	25	22	4
100	11.5	19.8	G1/2	11.8	4	10	110	89	19.2	25	22	4
125	11.5	18	G1/2	8	14	13	134	110	20.5	32	27	6

BY-DNCD双活塞杆系列/BY-DNCD DOUBLE PISTON ROD SERIES

订购码/Ordering code

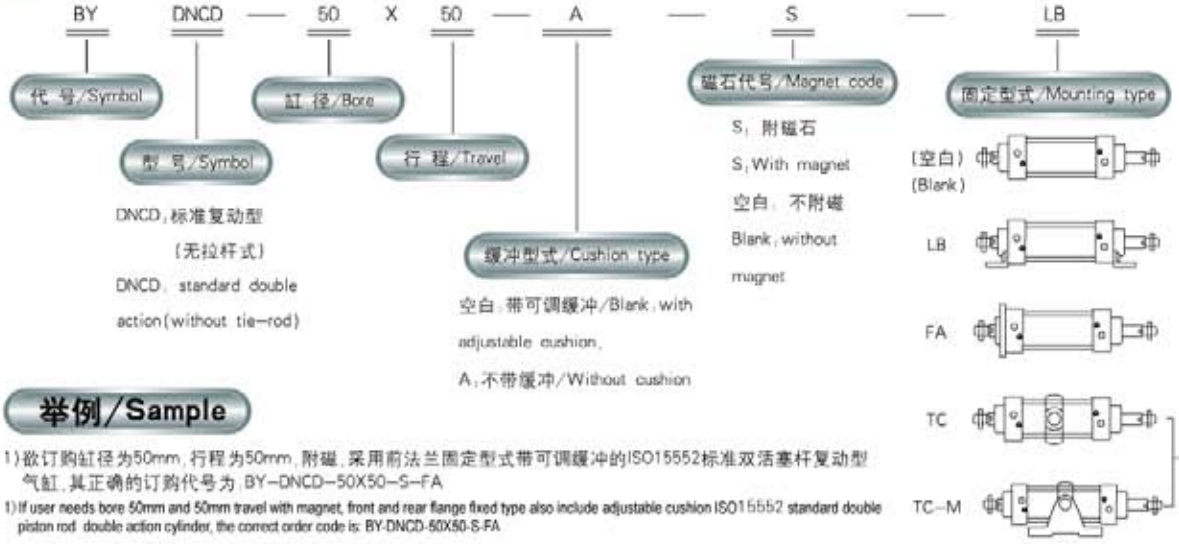

举例/Sample

1)欲订购缸径为50mm，行程为50mm，附磁，采用前法兰固定型式带可调缓冲的ISO15552标准双活塞杆复动型气缸，其正确的订购代号为：BY-DNCD-50X50-S-FA

1)If user needs bore 50mm and 50mm travel with magnet, front and rear flange fixed type also include adjustable cushion ISO15552 standard double piston rod double action cylinder, the correct order code is: BY-DNCD-50X50-S-FA

2)欲订购缸径为63mm，行程为80mm，不附磁，采用基本型固定型式不带缓冲的ISO15552标准双活塞杆复动型气缸，其正确的订购代号为：BY-DNCD-63X80-A

2)If user needs bore 63mm and 80mm travel, without magnet,and basic fixed type, without cushion, ISO15552 double piston rod double action cylinder, the correct order is: BY-DNCD-63X80-A

基本尺寸/Basic specification

Φ32－Φ125

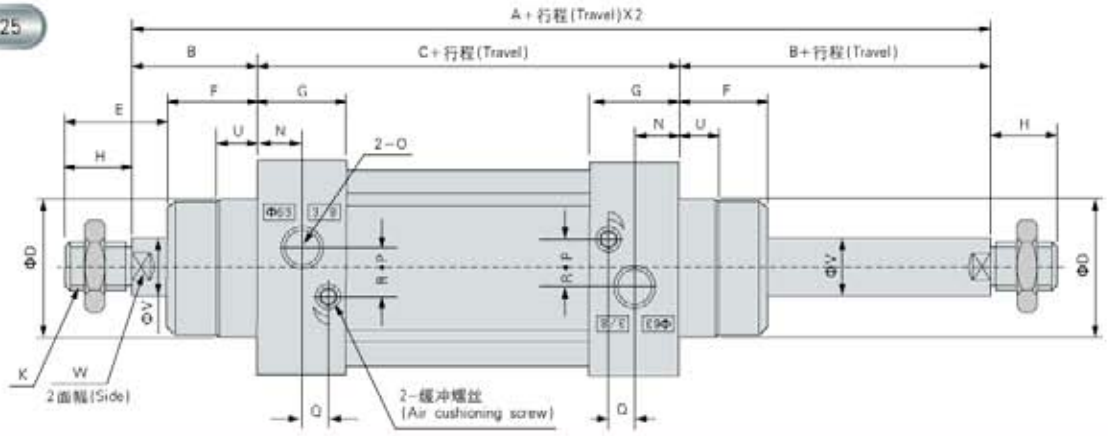

内径/符号(Bore/Symbol)	A	B	C	D	E	F	G	H	I	K	L
32	146	26	94	30	30	18	25.1	22	17	M10 x 1.25	M6
40	165	30	105	35	32.5	21.5	29.6	24	17	M12 x 1.25	M6
50	180	37	106	40	41	28	29.6	32	23	M16 x 1.5	M8
63	195	37	121	45	40.5	28.5	35.6	32	23	M16 x 1.5	M8
80	220	46	128	45	51.3	34.7	35.9	40	26	M20 x1.5	M10
100	240	51	138	55	52.8	38.2	38.8	40	26	M20 x1.5	M10
125	291	65	160	60	73	46	45	54	41	M27X2	M12

内径/符号(Bore/Symbol)	M	N	O	P	Q	R	S	T	U	V	W
32	9.5	12.6	G1/8	5.5	5.5	7.1	45	32.5	10	12	10
40	9.5	14.6	G1/4	6	7	7.5	54	38	10	16	13
50	9.5	14.6	G1/4	8.5	4.5	8.5	64	46.5	11.5	20	17
63	9.5	18.1	G3/8	10	2	12	75	56.5	15	20	17
80	11.5	17.9	G3/8	12.7	1	8	93	72	15.7	25	22
100	11.5	19.8	G1/2	11.8	4	10	110	89	19.2	25	22
125	11.5	18	G1/2	8	14	13	134	110	20.5	32	27

安装附件/Mounting kits

BY-DNC-LB

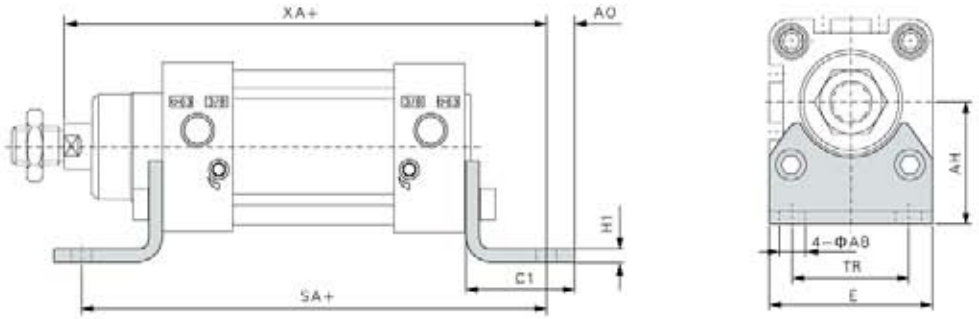

缸径/Bore(mm)	AB	AH	AO	CI	E	H1	SA	TR	XA
32	7	32	6.5	30.5	45	5	142	32	144
40	10	36	9	37	54	5	161	36	163
50	10	45	9.5	41.5	64	6	170	45	175
63	10	50	12.5	44.5	75	6	185	50	190
80	12	63	15	56	93	6	210	63	215
100	14.5	71	17.5	58.5	110	6	220	75	230
125	16.5	90	22	67	131	8	250	90	270

BY-DNC-FA、FB

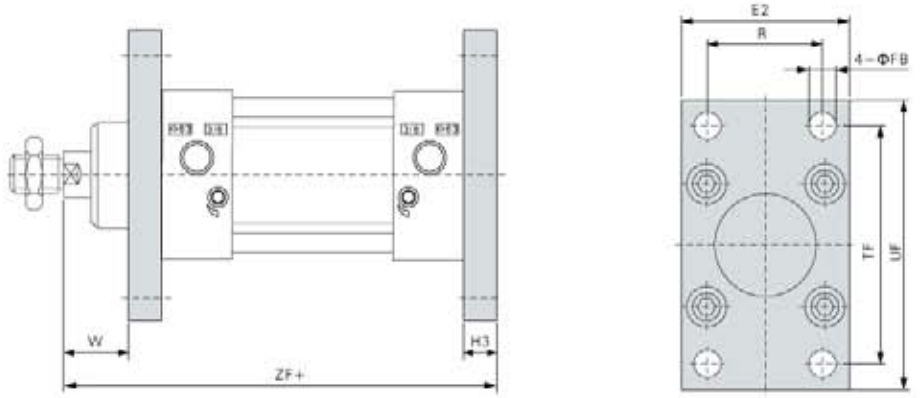

缸径/Bore(mm)	E2	FB H13	H3	R	TF	UF	W	ZF
32	50	7	10	32	64	80	16	130
40	55	9	10	36	72	90	20	145
50	65	9	12	45	90	110	25	155
63	75	9	12	50	100	125	25	170
80	100	12	16	63	126	154	30	190
100	120	14	16	75	150	186	35	205
125	140	16	20	90	180	220	45	245

安装附件/Mounting kits

BY DNC-CA

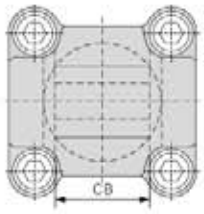

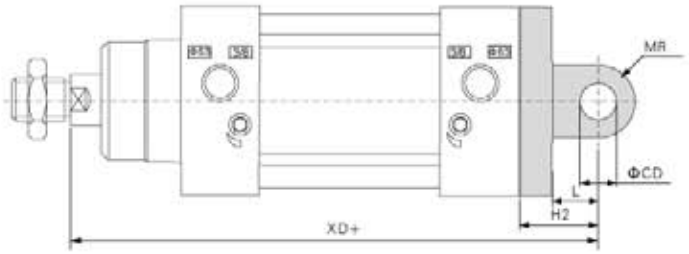

BY DNC-CB

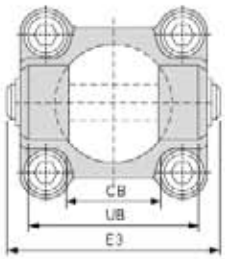

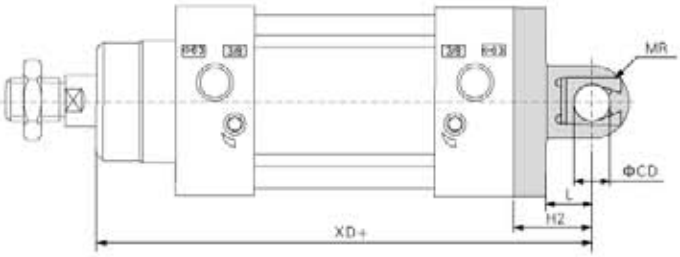

缸径/Bore(mm)	CB	CD	E3	H2	L	MR	UB	XD
32	26	10	55	22	13	10	45	142
40	28	12	63	25	16	12	52	160
50	32	12	71	27	16	12	60	170
63	40	16	83	32	21	16	70	190
80	50	16	103	36	22	16	90	210
100	60	20	127	41	27	20	110	230
125	70	25	148	50	30	25	130	275

BY DNC-TC

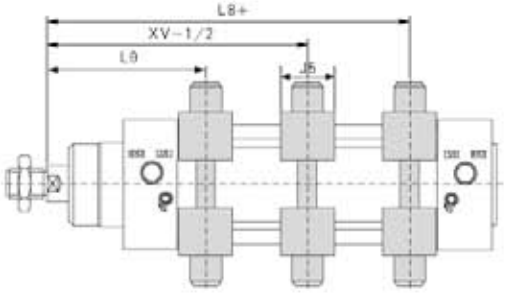

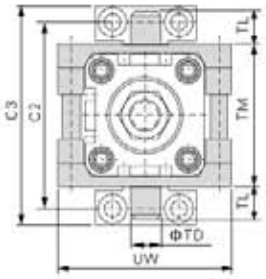

缸径/Bore(mm)	C2	C3	J5	L8	L9	TD	TL	TM	UW	XV
32	71	86	30	79.9	66.1	12	12	50	65	73
40	87	105	32	89.4	75.6	16	16	63	75	82.5
50	99	117	34	94.4	83.6	16	16	75	95	90
63	116	136	41	101.9	93.1	20	20	90	105	97.5
80	136	156	44	118.1	103.9	20	20	110	130	110
100	164	189	48	126.2	113.8	25	25	132	145	120
125	192	217	50	155.3	134.7	25	25	160	175	145

安装与使用/Install&use

- 工作中负载有变化，应选用输出力充裕的气缸，在高温条件下，应选用相应的耐高温气缸。
  The load would be changed during working process,so the cylinder with enough output force should be chosen ,on the case of high temperature , operator is suggested to choose the cylinder with high-temp seals!
- 气缸配管前，必须清除管道内的杂物，防止杂物进入气缸内。
  Before put in the air tube on the cylinder ,the inside surface of the pipe must be cleaned .In order to prevent sundries from entering into cylinder.
- 气缸使用介质应经过40μm以上滤芯过滤后方可使用。
  The medium used by cylinder can not be put into use until it has pass filtering by certain filtering element above 40um.
- 在低温环境下，应采取抗冻措施，防止系统的水分结冰。
  Under condition of low temperature ,the anti-freezing measure must be adopted ,so as to avoid freezing of engineering system.
- 气缸使用前经空载试运转，运转前将缓冲调至最小，逐步放松，以免产生过大冲击而损害气缸。
  The idling test should be done before operating of cylinder, before test the cushion screw must be adjusted to the minimum, then increased gradually ,so as to avoid super-large shock and break the cylinder!
- 气缸在工作过程中应尽可能避免受侧向负载，以维持气缸的正常工作和使用寿命。
  During the working process ,the cylinder should be avoid side-load,in order to maintain normal working and assure the lifetime of the cylinder.
- 气缸拆下长时间不使用，要注意表面防锈，进排气口应加防尘堵塞帽。
  If the cylinder has been out of work for a long time ,operator should take notice of surface rustproof,the dust proof cap is suggested to be added at air in and out hole .

气缸理论出力表/Table for theoretic power of a cylinder

气缸内径 Cylinder ID	活塞杆外径 Out diameter of piston rod	动作方式 Action type		受压面积 Pressure area (cm^2)	空气压力/Air pressure (kgf/cm^2)								
					1	2	3	4	5	6	7	8	9
32	12	复动型 (Double action)	压侧/Push side	8.04	8.04	16.08	24.12	32.16	40.20	48.24	56.28	64.32	72.36
			拉侧/Pull side	6.90	6.90	13.80	20.70	27.60	34.50	41.40	48.30	55.20	62.10
40	16		压侧/Push side	12.56	12.56	25.12	37.68	50.24	62.80	75.36	87.92	100.24	113.04
			拉侧/Pull side	10.55	10.55	21.10	31.65	42.20	52.75	63.30	73.85	84.40	94.95
50	20		压侧/Push side	19.63	19.63	39.26	58.89	78.52	98.15	117.78	137.41	157.04	176.67
			拉侧/Pull side	16.49	16.49	32.98	49.47	65.96	82.45	98.94	115.43	139.92	148.41
63	20		压侧/Push side	31.17	31.17	62.34	93.51	124.68	155.85	187.02	218.19	249.36	280.53
			拉侧/Pull side	28.03	28.03	55.06	84.09	112.12	140.15	168.18	196.21	224.24	252.27
80	25		压侧/Push side	50.26	50.26	100.52	150.78	201.04	251.30	301.56	351.82	402.08	452.34
			拉侧/Pull side	45.36	45.36	90.72	136.08	181.44	226.80	272.16	317.52	362.88	408.24
100	25		压侧/Push side	78.53	78.53	157.06	235.59	314.12	392.65	471.18	428.82	628.24	706.77
			拉侧/Pull side	73.62	73.62	147.24	220.86	294.86	368.10	441.72	515.34	588.96	662.58
125	32		压侧/Push side	122.72	122.72	245.44	368.16	490.88	613.60	736.32	859.04	981.76	1104.48
			拉侧/Pull side	114.68	114.68	229.36	344.04	458.72	573.40	688.08	802.76	917.44	1032.12
160	40		压侧/Push side	201.06	201.06	402.12	603.18	804.24	1005.30	1206.36	1407.42	1608.48	1809.54
			拉侧/Pull side	188.49	188.49	376.98	565.47	753.96	942.45	1130.94	1319.43	1507.92	1696.41
200	40		压侧/Push side	314.16	314.16	628.32	942.48	1256.64	1570.80	1884.96	2199.12	2513.28	2827.44
			拉侧/Pull side	301.57	301.57	60314	904.71	1206.28	1507.85	1809.42	2110.99	2412.56	2714.13
250	50		压侧/Push side	490.63	490.63	981.26	1471.89	1962.52	2453.15	2943.78	3434.41	3925.04	4415.67
			拉侧/Pull side	471.00	471.00	942.00	1413.00	1884.00	2355.00	2826.00	3297.00	3768.00	4239.00
320	63		压侧/Push side	803.84	803.84	1607.68	2411.52	3215.36	4019.2	4823.04	5626.88	6430.72	7234.56
			拉侧/Pull side	772.78	772.78	1545.56	2318.34	3091.12	3863.9	4636.68	5409.46	6182.24	6955.02

气缸理论出力计算方法／Formula for cylinder output power

$$F = P \times A$$

- A — 活塞受压面积/Piston pressed area (cm^2)
- P — 工作压力/Working pressure (Kgf/cm^2)
- F — 气缸理论出力/The output power of cylinder (Kgf)

产品特性/Product features

1、ISO15552(原ISO6431)标准气缸
ISO15552(ISO6431) standard cylinder

2、活塞密封采用两个Y型单向密封结构，有补偿功能，寿命长，启动压力低；
The piston ring is the Y type seals ,which have more longer lifetime and the request air pressure is more lower .

3、气缸缓冲调节平稳；
Air cushioning adjust smoothly .

4、多种规格的气缸及气缸安装附件可供客户选择使用。
Various mounting accessories are supplied.



符 号/Symbol

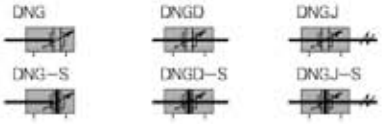

规 格/Specification

内径/Bore (mm)		32	40	50	63	80	100	125	160	200	250	320
作动方式/Action type		复动型/Double action										
工作介质/Work medium		空 气/Filtered air										
固定型式/Mounting type	DNG	基本型/Basic type FA FB CA CB LNG LB TC FTC TF TM										
	DNGD	基本型/Basic type FA LB TC FTC TF TM										
	DNGJ											
使用压力范围/Operation pressure range		0.1～1.0MPa(14～145Psi)										
保证耐压力/Proof pressure		1.5MPa(215Psi)										
工作温度/Working temperature ℃		−20～80										
使用速度范围/Operation speed (mm/s)		30～800						30～500			20～300	
行程公差范围/Tolerance of travel		$0\sim250\ ^{+1.0}_{0}$			$251\sim1000\ ^{+1.4}_{0}$			$1001\sim1500\ ^{+1.8}_{0}$			$1750\sim2500\ ^{+1.8}_{0}$	
缓冲型式/Cushioning		可调缓冲/Adjustable cushioning										
缓冲行程/Cushioning travel (mm)		27		30		36		40	50			
接管口径/Port size ①		PT1/8	PT1/4		PT3/8		PT1/2		PT3/4		PT1"	

①接管牙型有NPT、G牙可供选择/Port size,NPT and G thread also available

标准气缸DNG系列 符合ISO 15552标准
STANDARD CYLINDER DNG SERIES ISO 15552 STANDARD

BANGYE®

行 程/Travel

单位/unit:mm

内径/Bore (mm)	标准行程 / Standard travel	最大行程 Max travel	容许行程 Available travel
32	25 50 75 80 100 125 150 160 175 200 250 300 350 400 450 500	1000	1800
40	25 50 75 80 100 125 150 160 175 200 250 300 350 400 450 500 600 700 800	1200	1800
50	25 50 75 80 100 125 150 160 175 200 250 300 350 400 450 500 600 700 800 900 1000	1200	1800
63	25 50 75 80 100 125 150 160 175 200 250 300 350 400 450 500 600 700 800 900 1000	1500	1800
80	25 50 75 80 100 125 150 160 175 200 250 300 350 400 450 500 600 700 800 900 1000	1500	1800
100	25 50 75 80 100 125 150 160 175 200 250 300 350 400 450 500 600 700 800 900 1000	1500	1800
125	25 50 75 80 100 125 150 160 175 200 250 300 350 400 450 500 600 700 800 900 1000	1500	1800
160	25 50 75 80 100 125 150 160 175 200 250 300 350 400 450 500 600 700 800 900 1000	1500	2000
200	25 50 75 80 100 125 150 160 175 200 250 300 350 400 450 500 600 700 800 900 1000	1500	2000
250	25 50 75 80 100 125 150 160 175 200 250 300 350 400 450 500 600 700 800 900 1000	1500	2000
320	25 50 75 80 100 125 150 160 175 200 250 300 350 400 450 500 600 700 800 900 1000	1600	2000

订购码/Ordering code

DNG — 160 □ X 50 — 20 — S — □ — □ — □

型 号/Symbol

DNG:标准复动型(拉杆式)
DNG:Standard double action cylinder(cylinder with tie rod)
DNGD:双轴复动型(拉杆式)
DNGD:Two rod double action(cylinder with tie rod)
DNGJ:双轴复动行程可调型(拉杆式)
DNGJ:Two rod double action with adjustable travel(cylinder with tie rod)
DNGU:标准复动型(无拉杆式)
DNGU:Standard double action cylinder(cylinder without tie rod)
DNGUD:双轴复动型(无拉杆式)
DNGUD:Two rod double action(cylinder without tie rod)
DNGUJ:双轴复动行程可调型(无拉杆式)
DNGUJ:Two rod double action with adjustable travel(cylinder without tie rod)

注：无拉杆式只适用于缸径 Φ32-Φ200
Remark:cylinder without tie rod just available from bore 32 to 200mm

缸 径/Bore

活塞杆材质/Piston rod material

空白：中碳钢
Blank:medium carbon steel
A:SUS420J2
B:SUS304

行程/Travel

调整行程 Adjustable travel

10:10mm
20:20mm
30:30mm
40:40mm
50:50mm
75:75mm
100:100mm

磁石代号/Magnet code

S：附磁石
S:With magnet
空白：不附磁
blank:Without magnet

密封件材质/Seals material

空白：TPU/Blank:TPU
N：NBR
H：氟橡胶/VITON

固定型式/Mounting type ①

	固定型式 Install type	适用系列 Available series	备注/Remark
空白 Black		DNG	
LB			
FA			
FB		DNG	
CA			
CB			
LNG			与CB配合使用 Working with CB
TC		DNG	与TF、FM配合使用 Working with TF、FM
FTC			

牙型代码 Thread code

空白:PT牙
Blank:PT thread
T:NPT牙/thread
G:G牙/thread

内部结构及主要零件材质/Inner structure and material list for main parts

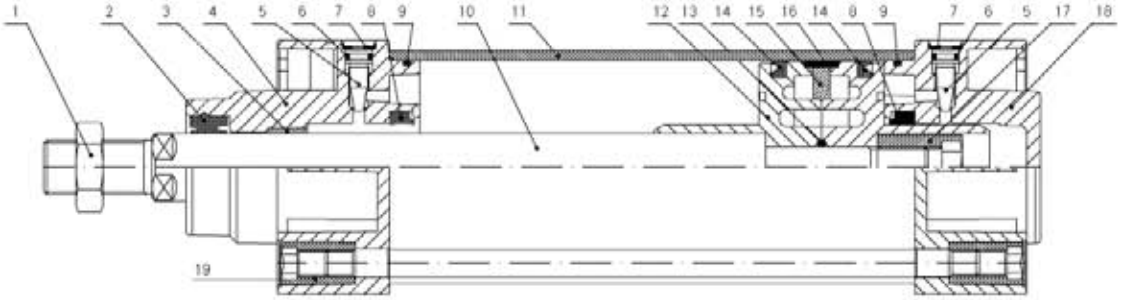

序号/No	名称/Name	材质/Material	序号/No	名称/Name	材质/Material
1	活塞杆螺帽/Nut for piston rod	碳钢/Carbon steel	11	缸筒/Tube	铝合金/Aluminium alloy
2	防尘圈/Anti dust seals	PU	12	活塞/Piston	铝合金/Aluminium alloy
3	含油轴承/Oil bearing	铜基粉法合金/Sinterized bronze	13	轴芯垫/O-ring for piston and piston rod	NBR
4	前端盖/Front cover	铝合金/Aluminium alloy	14	活塞圈/Piston ring	NBR
5	针阀/Air cushioning screw	59铜/H59 brass	15	磁环/Magnet	铁氧体/Ferrite
6	针阀O型圈/O-ring for air cushioning screw	NBR	16	导向带/Wearing ring	POM
7	针阀卡环/Anti for air cushion hole screw	弹簧钢/Spring steel	17	活塞固定螺帽/Nut for piston and piston rod fixed	碳钢/Carbon steel
8	缓冲圈/Cushioning seals	NBR	18	后端盖/Back cover	铝合金/Aluminium alloy
9	管壁O型圈/O-ring for front cover	NBR	19	支柱螺帽/Tie-rod screw nut	碳钢/Carbon steel
10	活塞杆/Piston rod	碳钢/Carbon steel			

外部规格/Overall dimension

DNG

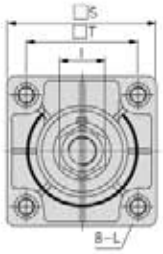

注：附磁型与不附磁型之尺寸相同
Remark: the cylinder with magnet and the cylinder without magnet have the same dimension.

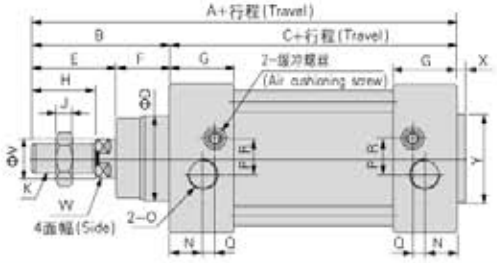

内径/符号(Bore/Symbol)	A	B	C	D	E	F	G	H	I	J	K	L	N
32	142	48	94	30	29	19	27.5	22	17	6	M10X1.25	M6	13
40	159	54	105	35	33	21	32	24	17	7	M12X1.25	M6	17
50	175	69	106	40	42	27	31	32	23	8	M16X1.5	M8	15.5
63	190	69	121	45	42	27	33	32	23	8	M16X1.5	M8	16.5
80	214	86	128	45	53	33	33	40	26	10	M20X1.5	M10	16.5
100	229	91	138	55	55	36	37	40	26	10	M20X1.5	M10	18.5
125	274	119	160	60	74	45	46	54	41	13.5	M27X2	M12	23
160	332	152	180	65	94	58	50	72	55	18	M36X2	M16	25
200	347	167	180	75	100	67	50	72	55	18	M36X2	M16	25
250	389	189	200	90	114	75	60	84	64	20	M42X2	M20	30
320	436	216	220	110	126	90	65	96	72	20	M48X2	M24	30

内径/符号(Bore/Symbol)	O	P	Q	R	S	T	V	W	X	Y
32	PT1/8	5.5	6	6	47	32.5	12	10	3	30
40	PT1/4	6	7.5	8.5	53	38	16	13	3.5	35
50	PT1/4	7.5	6.5	9.5	65	46.5	20	17	3.5	40
63	PT3/8	7.5	7.5	11.5	75	56.5	20	17	4	45
80	PT3/8	9	7.5	13.5	95	72	25	22	4	45
100	PT1/2	9.5	8.5	13.5	115	89	25	22	4	55
125	PT1/2	14	12	14	140	110	32	27	4	60
160	PT3/4	15	12	20	180	140	40	36	4	65
200	PT3/4	15	12	20	220	175	40	36	5	75
250	PT1	25	10	25	270	220	50	46	8	90
320	PT1	30	15	30	350	270	63	55	10	110

DNGD

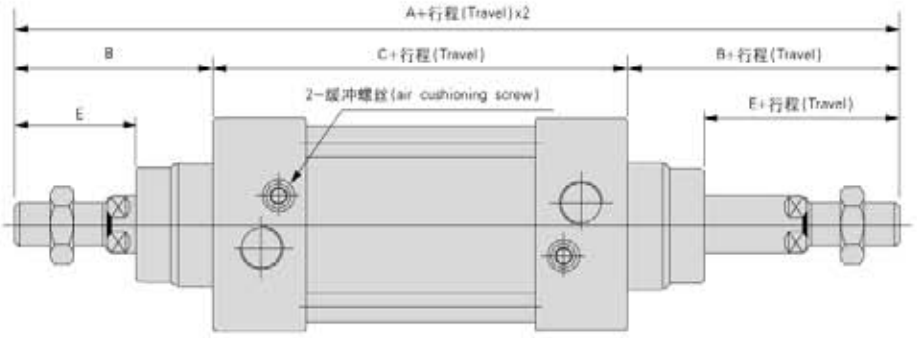

DNGJ

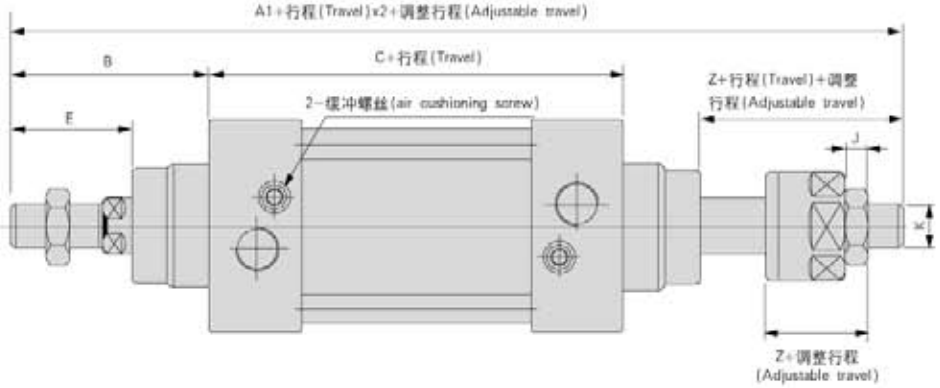

内径/符号(Bore/Symbol)	A	A1	B	C	E	Z	J	K
32	190	188	48	94	29	27	6	M10X1.25
40	213	208	54	105	33	28	7	M12X1.25
50	244	231	69	106	42	29	8	M16X1.5
63	259	246	69	121	42	29	8	M16X1.5
80	300	282.5	86	128	53	35.5	10	M20X1.5
100	320	300.5	91	138	55	35.5	10	M20X1.5
125	398	366.5	119	160	74	42.5	13.5	M27X2
160	484	458	152	180	94	68	18	M36X2
200	514	482	167	180	100	68	18	M36X2
250	578	544	189	200	122	80	20	M42X2
320	652	616	216	220	134	90	17	M48X2

注. 1. 耐磁型与不耐磁型之尺寸相同/Remark. the cylinder with magnet and the cylinder without magnet have the same dimension.
2. 未标注之尺寸与DNG标准型相同/Unmarked dimension is the same as DNG series

附 件/Mounting kits

附件订购码/Mounting kits ordering code

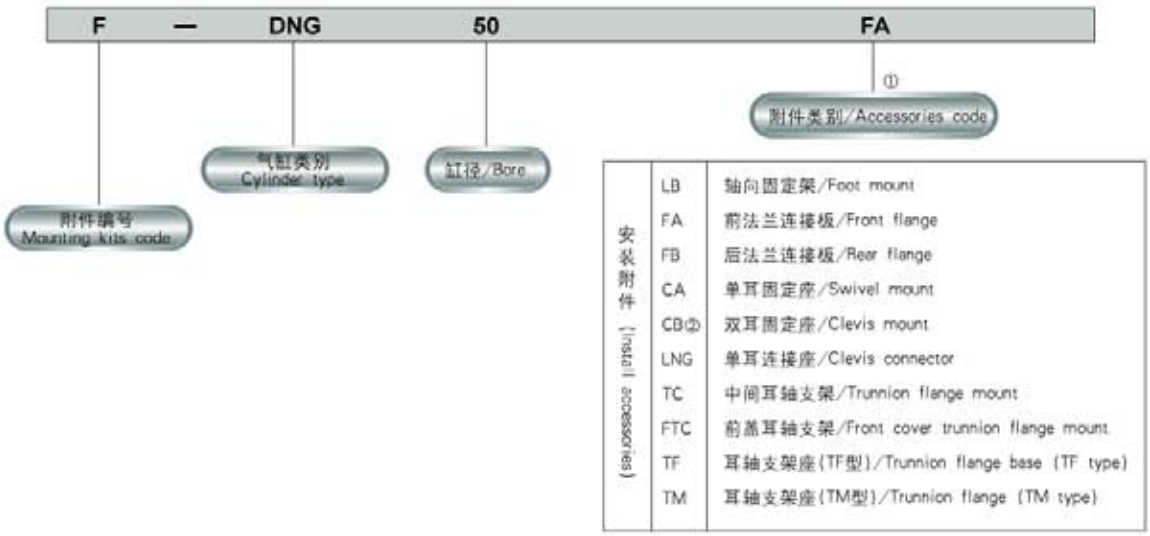

附件选配/Mounting kits choose

气缸型号/Cylinder code / 附件/Mounting kits		DNG		DNGD		DNGJ	
		标准型 Standard type	附磁型 Magnet	标准型 Standard type	附磁型 Magnet	标准型 Standard type	附磁型 Magnet
安装附件 (Install accessories)	LB	●	●	●	●	●	●
	FA	●	●	●	●	●	●
	FB	●	●	X	X	X	X
	CA	●	●	X	X	X	X
	CB	●	●	X	X	X	X
	LNG	●	●	X	X	X	X
	TC	●	●	●	●	●	●
	FTC	●	●	●	●	●	●
	TF	●	●	●	●	●	●
	TM	●	●	●	●	●	●
①连接附件 Connector kits	I	●	●	●	●	●	●
	Y	●	●	●	●	●	●
	U	●	●	●	●	●	●
	F	●	●	●	●	●	●
②感应开关 Sensor Switch	CS1-B	X	●	X	●	X	●
	CS1-BX	X	●	X	●	X	●
	CS1-BN	X	●	X	●	X	●
	CS1-BP	X	●	X	●	X	●

附 件/Mounting kits

外部规格/Outside dimension

FA

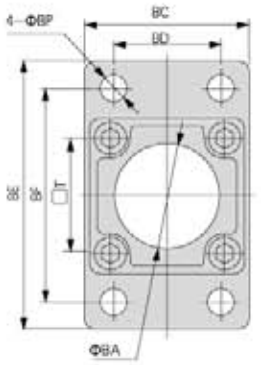

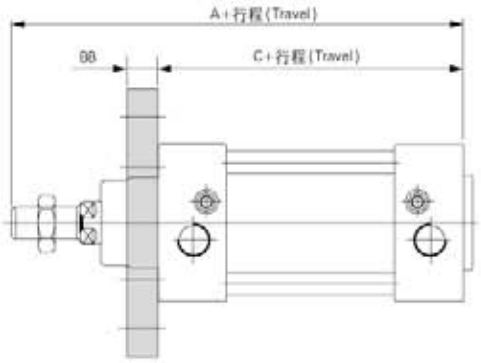

FB

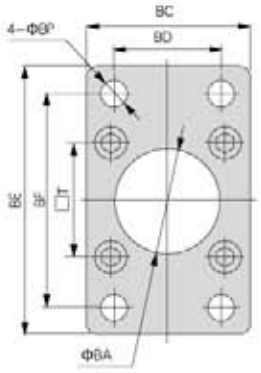

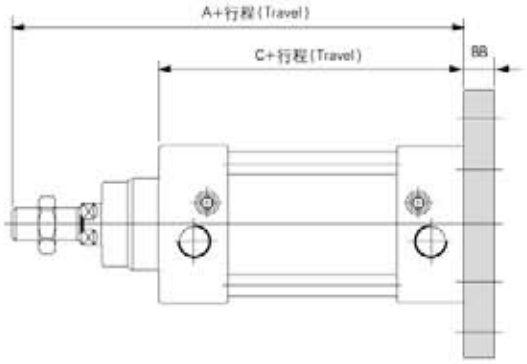

符号/内径(Symbol/Bore)	32	40	50	63	80	100	125	160	200	250	320
A	142	159	175	190	214	229	274	332	347	389	436
C	94	105	106	121	128	138	160	180	180	200	220
BA	30	35	40	45.5	45	55	61	66	76	91	110
BB	10	10	12	12	16	16	20	20	25	25	30
BC	45	52	65	75	95	115	139	180	220	270	349
BD	32	36	45	50	63	75	90	115	135	165	200
BE	80	90	110	120	150	175	220	280	320	390	470
BF	64	72	90	100	126	150	180	230	270	330	400
BP	7	9	9	9	12	14	16	18	22	26	33
T	32.5	38	46.5	56.5	72	89	110	140	175	220	270

附 件/Mounting kits

附件材质/Accessories material

附件 Mounting kits / 缸 径/Bore	安装附件/Install accessories										连接附件/Connector kits	
	LB	FA	FB	CR	CA	CB	TC	FTC	TF	TM	I、Y	F、U
32～100	低碳钢 Low carbon steel	铝合金 Aluminium alloy					铸钢 Cast steel			铝合金 Aluminium alloy	碳钢/Carbon steel	
125～320	碳钢/Carbon steel											

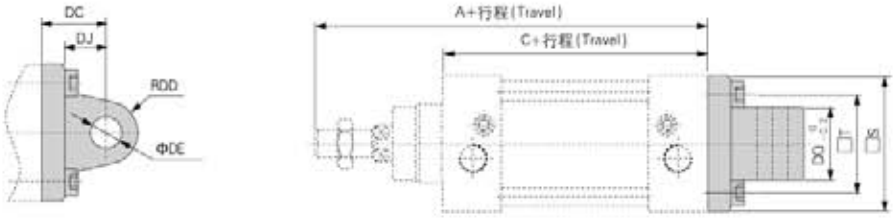

符号/内径(Symbol/Bore)	32	40	50	63	80	100	125	160	200	250	320
A	142	159	175	190	214	229	274	332	347	389	436
C	94	105	106	121	128	138	160	180	180	200	220
S	47	52	64	74	94	113	139	180	220	210	350
T	32.5	38	46.5	56.5	72	89	110	140	175	220	270
DC	22	25	27	32	36	41	50	55	60	70	80
DD	9	10.5	11	13.5	14.5	17	22	25	25	40	45
DE	10	12	12	16	16	20	25	30	30	40	45
DJ	13	16	17	22	22	27	33	35	35	47	52
DO	25.8	27.5	31.7	39.7	49.7	59.7	69.7	90	90	110	120

外部规格/Overall dimension

CB



符号/内径(Symbol/Bore)	32	40	50	63	80	100	125	160	200	250	320
A	142	159	175	190	214	229	274	332	347	389	436
C	94	105	106	121	128	138	160	180	180	200	220
CC	22	25	27	32	36	41	50	55	60	70	80
CD	9	10.5	11	13	14	17.5	21.5	30	30	40	45
CE	10	12	12	16	16	20	25	30	30	40	45
CJ	13	16	17	22	22	27	31	35	35	47	52
CP	26	25	32	40	50	60	70	90	90	110	120
CT	45	52	60	70	90	110	130	170	170	200	220
PA1	51	59	67	77	97	119	139	181	181	220	240
PB1	45.5	52.5	60.5	70.5	90.5	10.5	130.5	70.5	170.5	202	222
S	47	52	64	74	94	113	139	180	220	270	350
T	32.5	38	46.5	56.5	72	89	110	140	175	220	270

附 件/Mounting kits

LB

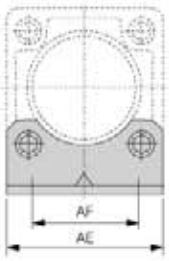

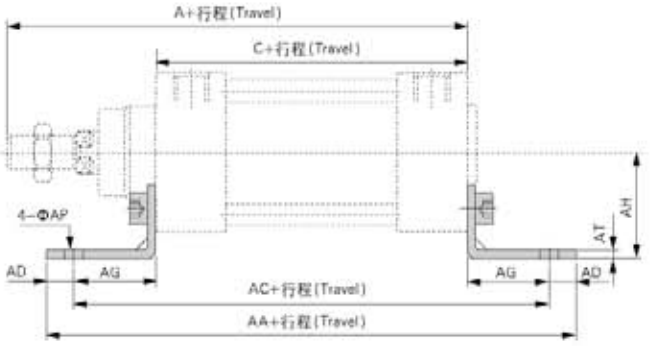

符号/内径(Symbol/Bore)	32	40	50	63	80	100	125	160	200	250	320
A	142	159	175	190	214	229	274	332	347	388	436
C	94	105	106	121	128	138	160	180	180	200	220
AA	158	179	190	209	248	266	290	340	380	420	470
AC	142	161	170	185	210	228	250	300	320	350	390
AD	8	9	10	12	19	19	20	20	30	35	40
AE	47	53	65	75	95	115	140	180	220	270	350
AF	32	36	45	50	63	75	90	115	135	165	200
AG	24	28	32	32	41	45	45	60	70	75	85
AH	32	36	45	50	63	71	90	115	135	165	185
AP	7	9	9	9	12.5	14.5	16.5	18	22	28	35
AT	3	3	3	3	4	4	8	8	9	20	23

TC

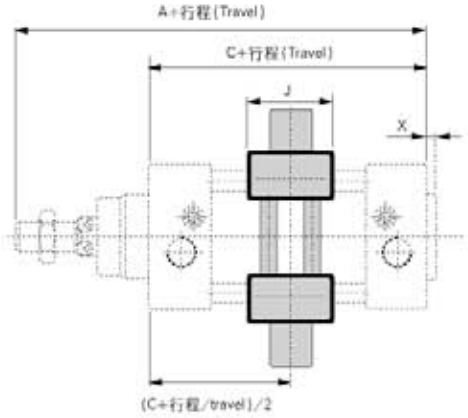

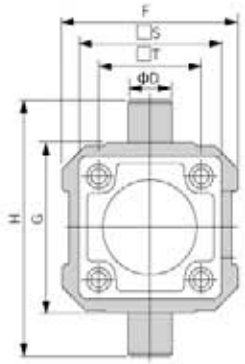

注：附件安装位置不可任意调整/Remark, install position can not be changed

内径/符号(Bore/Symbol)	A	C	D	F	G	H	J	S	X	T
32	142	94	12	52	50	74	22	47	3	32.5
40	159	105	16	65	63	95	28	53	3.5	38
50	175	106	16	75	75	107	28	65	3.5	46.5
63	190	121	20	90	90	130	30	75	4	56.5
80	214	128	20	112	110	150	32	95	4	72
100	229	138	25	135	132	182	38	115	4	89
125	279	160	25	170	160	210	40	140	4	110
160	332	180	32	210	200	264	50	180	4	140
200	347	180	32	255	250	314	50	220	5	175

附 件/Mounting kits

TF

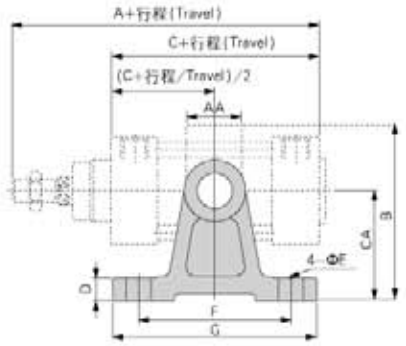

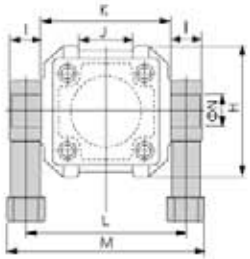

注：附件安装位置不可任意调整/Remark: install position can not be changed

符号/内径(Symbol/Bore)	32	40	50	63	80	100	125	160	200
A	142	159	175	190	214	229	279	332	347
AA	22	28	28	30	32	38	40	50	50
B	66	86.5	91.5	115	126	157.5	175	215	262.5
C	94	105	106	121	128	138	160	180	180
CA	40	54	54	70	70	90	90	110	135
D	11	11	11	11	11	19	19	24	27
E	9	12	12	12	12	18	18	22	22
F	60	75	75	85	85	115	115	140	150
G	80	100	100	110	110	155	155	190	200
H	52	65	75	90	112	135	170	210	255
I	12	16	16	20	20	25	25	32	32
J	20	27	31	42	54	68	80	100	125
K	50	63	75	90	110	132	160	200	250
L	62	79	91	110	130	157	185	232	282
M	77	98	110	133	153	185	213	267	317
N	12	16	16	20	20	25	25	32	32

FTC

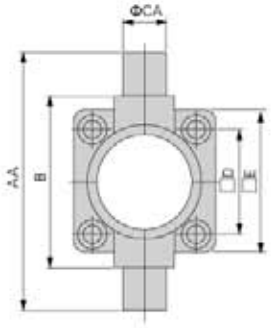

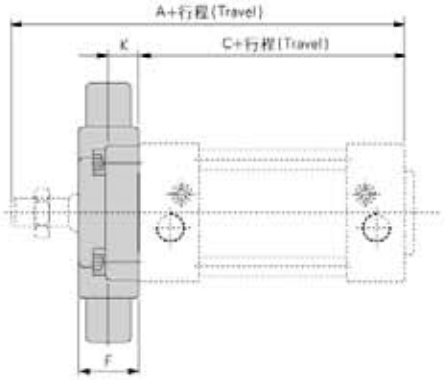

符号/内径(Symbol/Bore)	32	40	50	63	80	100	125	160	200
A	142	159	175	190	214	229	279	332	347
AA	74	95	107	130	150	182	210	264	314
B	50	63	75	90	110	132	160	200	250
C	94	105	106	121	128	138	160	180	180
CA	12	16	16	20	20	25	25	32	32
D	32.5	38	46.5	56.5	72	89	110	140	175
E	46	52	64	74	94	114	139	179	218
F	19	21	26	28	31	35	43	56	64
K	10	10	12	12	16	16	20	20	20

附 件/Mounting kits

SNCS

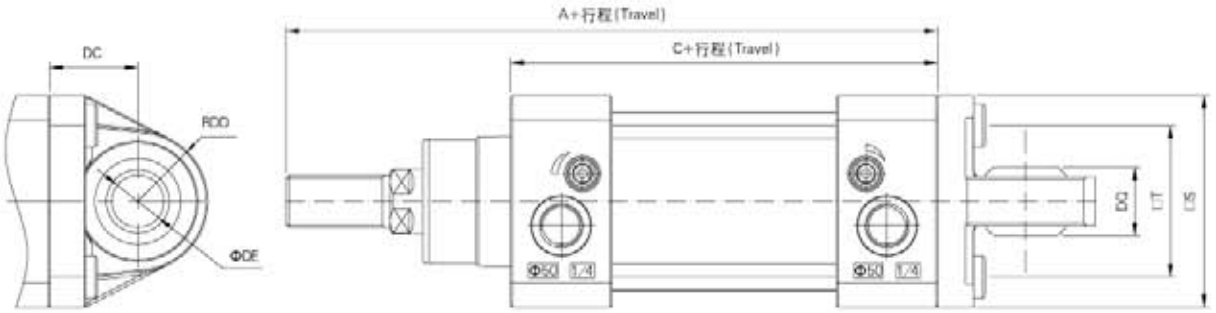

符号/内径(Symbol/Bore)	32	40	50	63	80	100
A	142	159	175	190	214	229
C	94	105	106	121	128	138
S	47	53	65	75	95	115
T	32.5	38	46.5	56.5	72	89
DC	22	25	27	32	36	41
DD	15	17	20	22	27	29
DE	10	12	16	16	20	20
DQ	14	16	21	21	25	25

LNG与CB配合用/LNG Working with CB

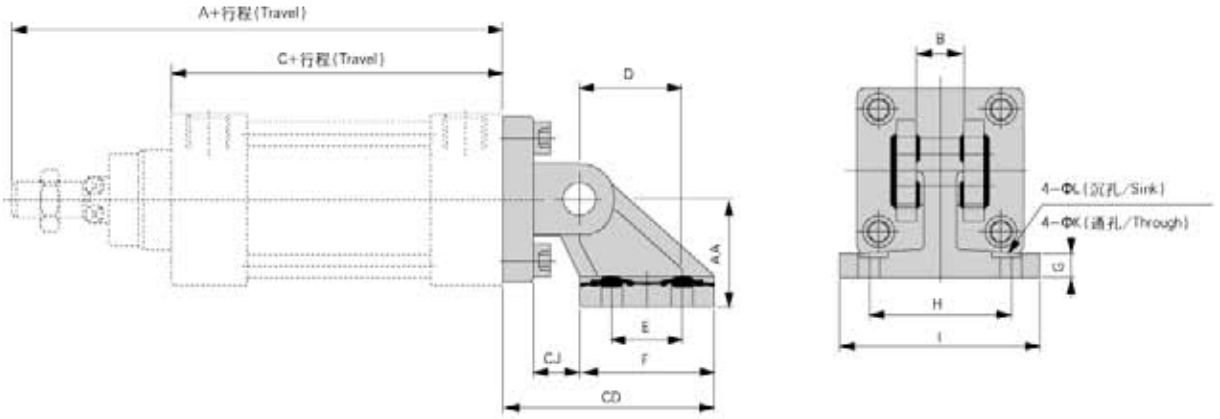

符号/内径(Symbol/Bore)	32	40	50	63	80	100	125	160	200
A	142	159	175	190	214	229	274	332	347
AA	32	36	45	50	63	71	90	115	135
B	26	28	32	40	50	60	70	90	90
C	94	105	106	121	128	138	160	180	180
CD	50	56	68	77	93	106	135	172	185
CJ	10	12	13	17	19	22	26	25	31
D	21	24	33	37	47	55	70	97	105
E	18	22	30	35	40	50	60	88	90
F	31	35	45	50	60	70	90	126	130
G	8	10	12	14	14	17	20	25	30
H	38	41	50	52	66	76	94	118	122
I	51	54	65	67	86	96	124	156	162
K	6.6	6.6	9	9	11	11	14	14	18
L	–	–	–	–	18	18	21	21	26

安装与使用/Install&use

- 工作中负载有变化，应选用输出力充裕的气缸，在高温条件下，应选用相应的耐高温气缸。
  The load would be changed during working process,so the cylinder with enough output force should be chosen,on the case of high temperature , operator is suggested to choose the cylinder with high-temp seals!

- 气缸配管前，必须清除管道内的杂物，防止杂物进入气缸内。
  Before put in the air tube on the cylinder, the inside surface of the pipe must be cleaned. In order to prevent sundries from entering into cylinder.

- 气缸使用介质应经过40μm以上滤芯过滤后方可使用。
  The medium used by cylinder can not be put into use until it has pass filtering by certain filtering element above 40um.

- 在低温环境下，应采取抗冻措施，防止系统的水分结冰。
  Under condition of low temperature, the anti-freezing measure must be adopted,so as to avoid freezing of engineering system.

- 气缸使用前经空载试运转，运转前将缓冲调至最小，逐步放松，以免产生过大冲击而损害气缸。
  The idling test should be done before operating of cylinder, before test the cushion screw must be adjusted to the minimum, then increased gradually ,so as to avoid super-large shock and break the cylinder!

- 气缸在工作过程中应尽可能避免受侧向负载，以维持气缸的正常工作和使用寿命。
  During the working process, the cylinder should be avoid side-load,in order to maintain normal working and assure the lifetime of the cylinder.

- 气缸拆下长时间不使用，要注意表面防锈，进排气口应加防尘堵塞帽。
  If the cylinder has been out of work for a long time, operator should take notice of surface rustproof,the dust proof cap is suggested to be added at air in and out hole.

气缸理论出力计算方法/Formula for cylinder output power

$$F = P \times A$$

- A：活塞受压面积/Piston pressed area (cm^2)
- P：工作压力/Working pressure (Kgf/cm^2)
- F：气缸理论出力/The output power of cylinder (Kgf)

技术资料/Technical data

气缸理论出力表/Table for theoretic power of a cylinder

气缸内径 Cylinder ID	活塞杆外径 Out diameter of piston rod	动作方式 Action type		受压面积 Pressure area (cm^2)	空气压力/Air pressure (kgf/cm^2)								
					1	2	3	4	5	6	7	8	9
32	12	复动型 (Double action)	压侧/Push side	8.04	8.04	16.08	24.12	32.16	40.20	48.24	56.28	64.32	72.36
			拉侧/Pull side	6.90	6.90	13.80	20.70	27.60	34.50	41.40	48.30	55.20	62.10
40	16		压侧/Push side	12.56	12.56	25.12	37.68	50.24	62.80	75.36	87.92	100.24	113.04
			拉侧/Pull side	10.55	10.55	21.10	31.65	42.20	52.75	63.30	73.85	84.40	94.95
50	20		压侧/Push side	19.63	19.63	39.26	58.89	78.52	98.15	117.78	137.41	157.04	176.67
			拉侧/Pull side	16.49	16.49	32.98	49.47	65.96	82.45	98.94	115.43	139.92	148.41
63	20		压侧/Push side	31.17	31.17	62.34	93.51	124.68	155.85	187.02	218.19	249.36	280.53
			拉侧/Pull side	28.03	28.03	55.06	84.09	112.12	140.15	168.18	196.21	224.24	252.27
80	25		压侧/Push side	50.26	50.26	100.52	150.78	201.04	251.30	301.56	351.82	402.08	452.34
			拉侧/Pull side	45.36	45.36	90.72	136.08	181.44	226.80	272.16	317.52	362.88	408.24
100	25		压侧/Push side	78.53	78.53	157.06	235.59	314.12	392.65	471.18	549.71	628.24	706.77
			拉侧/Pull side	73.62	73.62	147.24	220.86	294.48	368.10	441.72	515.34	589.96	662.58

规 格/Specification

内径/Bore (mm)	32	40	50	63	80	100
动作型式/Action type	复动型/Double action					
工作介质/Work medium	空 气/Filtered air					
固定型式/Mounting type	基本型/Basic type FA型/Type FB型/Type CA型/Type CB型/Type LB型/Type TC型/Type TC-M型/Type					
使用压力范围/Operation pressure range(Kgf/cm^2)	1～9.0					
保证耐压力/Proof pressure(Kgf/cm^2)	13.5					
使用温度范围/Available temperature ℃	-5～70					
使用速度范围/Operation speed (mm/s)	50～800					
缓冲型式/Cushioning	可调缓冲/Adjustable cushioning					
缓冲行程/Cushioning travel (mm)	24					
接管口径/Port size	PT1/8	PT1/4		PT3/8		PT1/2

行 程/Travel

内径/Bore(mm)	标准行程 / Standard travel	最大行程 Max travel	容许行程 Available travel
32	25 50 75 100 125 150 175 200 250 300 350 400 450 500	1000	2000
40	25 50 75 100 125 150 175 200 250 300 350 400 450 500 600 700 800	1200	2000
50	25 50 75 100 125 150 175 200 250 300 350 400 450 500 600 700 800 900 1000	1200	2000
63	25 50 75 100 125 150 175 200 250 300 350 400 450 500 600 700 800 900 1000	1500	2000
80	25 50 75 100 125 150 175 200 250 300 350 400 450 500 600 700 800 900 1000	1500	2000
100	25 50 75 100 125 150 175 200 250 300 350 400 450 500 600 700 800 900 1000	1500	2000

※ 特殊行程请与本公司联系/Special travel should checked with our factory.

标准气缸SU系列
STANDARD CYLINDER SU SERIES

BANGYE®

产品特性/Product features

免润滑/Free of lubrication

采用含油轴承，使活塞杆无需加油润滑。
Oil bearing is adopted so the piston rod do not need to be lubricated.

缓冲性/Cushion

除带固定缓冲外，气缸终端还带可调缓冲，
使气缸换向时平稳无冲击。
Besides fixed buffer,the cylinder terminal has adjustable cushion screw,so that the cylinder enters into stably without impact during commute direction .

耐高温性/High temperature available

可采用耐高温密封材料，使气缸在150摄氏度
高温条件下正常工作(客户需向本公司订作)。
Adopted of special sealing material ,the cylinder can work normally at 150 degree (user should order it from us).

安装型式多样/Various mounting type

多种安装附件供客户选择。
Various mounting accessories are supplied.

附磁性/Magnetic property

气缸活塞上装有一个永久磁铁，它可触发安装
在气缸上的磁性开关来感测气缸的运动位置。
The cylinder piston is equipped with a permanent magnet that can trigger the magnetic switch of the cylinder to detect the moving position of cylinder.



符 号/Symbol



内部结构及主要零件材质/Inner structure and material list for main parts

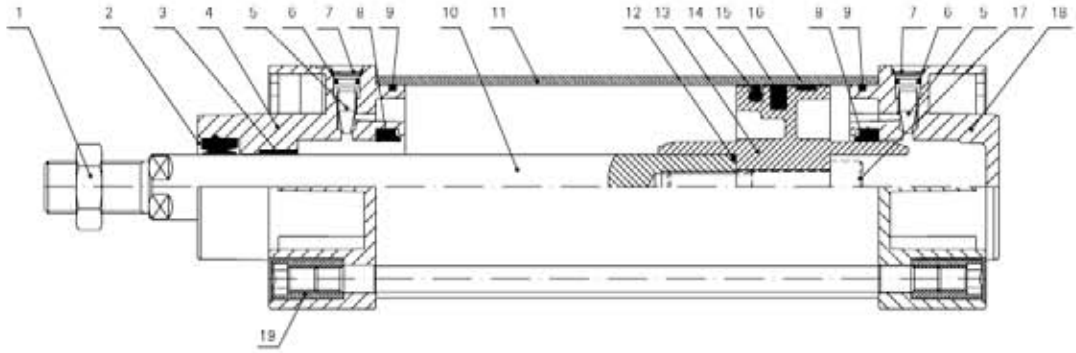

序号/No	名称/Name	材质/Carbon brass	序号/No	名称/Name	材质/carbon brass
1	活塞杆螺帽/Nut for piston rod	碳钢/Carbon steel	11	缸筒/Tube	铝合金/Aluminium alloy
2	防尘圈/Anti dust seals	PU	12	活塞杆O型圈/O-ring for piston rod	NBR
3	含油轴承/Oil bearing	铜基粉沫合金/Sinterized bronze	13	活塞/Piston	铝合金/Aluminium alloy
4	前端盖/Front cover	铝合金/Aluminium alloy	14	活塞圈/Piston ring	NBR
5	针阀/Air cushioning screw	黄铜/Brass	15	磁环/Magner	铁氧体/Ferrite
6	针阀O型圈/O-ring for air cushioning screw	NBR	16	导向带/Wearing ring	POM
7	针阀卡环/Anti for air cushion hole screw	弹簧钢/Spring steel	17	活塞固定螺丝/Piston fixing screw	碳钢/Carbon steel
8	缓冲圈/Cushioning seals	NBR	18	后端盖/Back cover	铝合金/Aluminium alloy
9	管壁O型圈/O-ring for front cover	NBR	19	支柱螺帽/Strut nuts	碳钢/Carbon steel
10	活塞杆/Piston rod	碳钢/Carbon steel			

订购码/Ordering code

BA-SU —— 50 X 50 —— S —— LB

型 号/Symbol

BA-SU:标准复动型(黑色标准端盖，无拉杆式)
BA-SU:standard double action cylinder(black end cap,cylinder without tie rod)
BY-SU:标准复动型(端盖带塑料盖，无拉杆式)
BY-SU:standard double action cylinder(end cap with plastic cover,cylinder without tie rod)
SUE:标准复动型(使用EU防尘圈，无拉杆式)
SUE:standard double action cylinder(adopted EU type rod tightness seals,cylinder without tie rod)

缸 径/Bore

行 程/Travel

磁石代号/Magnet code

S：附磁石
S:With magnet
空白：不附磁
Blank:without magnet

固定型式/Mounting type

(空白)(Blank)
LB
FA
FB
CA
CB
TC
TC-M

适用于 Available Φ40—Φ100

举例/Sample

1)欲订购缸径为50mm，行程为50mm，使用黑色端盖，附磁，采用TC固定型式的标准复动型(无拉杆式)气缸，其正确的订购代号为：BA-SU-50x50-S-TC
1)If user needs bore 50 mm and 50 mm travel with magnet,TC fixed type, black end cap,standard double action cylinder without tie rod, the correct order code is:BA-SU-50x50-S-TC.
2)欲订购缸径为63mm，行程为80mm，使用EU防尘盖，附磁，采用LB固定型式的标准复动型(无拉杆式)气缸，其正确的订购代号为：SEU-63x80-S-LB
2)If user needs bore 63 mm and 80 mm travel with magnet,EU anti-dust wiper LB fixed type,standard double action cylinder without tie rod,the correct order code is:SEU-63x80-S-LB

基本尺寸/Basic specification

Φ32～Φ100

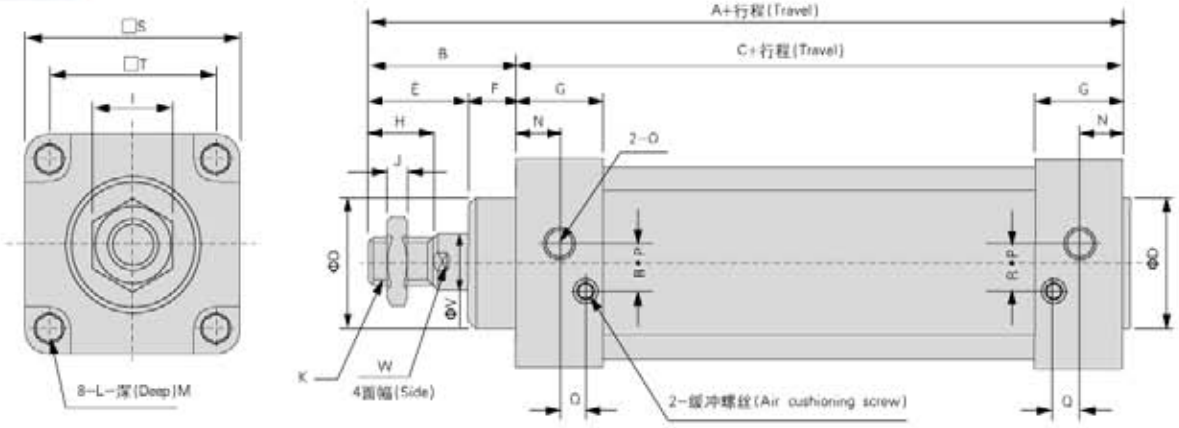

内径/符号(Bore/Symbol)	A	B	C	D	E	F	G	H	I	J	K	L
32	140	47	93	28	32	15	27.5	22	17	6	M10 x 1.25	M6x1
40	142	49	93	32	34	15	27.5	24	17	7	M12 x 1.25	M6x1
50	150	57	93	38	42	15	27.5	32	23	8	M16 x 1.5	M6x1
63	153	57	96	38	42	15	27.5	32	23	8	M16 x 1.5	M8x1.25
80	183	75	108	47	54	21	33	40	26	10	M20 x1.5	M10x1.5
100	189	75	114	47	54	21	33	40	26	10	M20 x1.5	M10x1.5

内径/符号(Bore/Symbol)	M	N	O	P	Q	R	S	T	V	W
32	9.5	13.7	PT1/8	3.5	7.5	7	45	33	12	10
40	9.5	13.5	PT1/4	6	8.2	9	50	37	16	14
50	9.5	13.5	PT1/4	8.5	8.2	9	62	47	20	17
63	9.5	13.5	PT3/8	7	8.2	8.5	75	56	20	17
80	11.5	16.5	PT3/8	10	9.5	14	94	70	25	22
100	11.5	16.5	PT1/2	11	9.5	14	112	84	25	22

SUD:双轴系列/SUD:DOUBLE PISTON ROD SERIES

订购码/Ordering code

BA-SUD ——— 50 X 50 ——— S ——— LB

型 号/Symbol

BA-SUD:标准复动型(黑色标准端盖，无拉杆式)
BA-SUD,standard double action cylinder(black end cap,cylinder without tie rod)
BY-SUD:标准复动型(端盖带塑料盖，无拉杆式)
BY-SUD,standard double action cylinder(end cap with plastic cover,cylinder without tie rod)
SUED:标准复动型(使用EU防尘圈，无拉杆式)
SUED,standard double action cylinder(adopted EU type rod tightness seals,cylinder without tie rod)

缸 径/Bore

行 程/Travel

磁石代号/Magnet code

S：附磁石
S;With magnet
空白：不附磁
Blank;without magnet

固定型式/Mounting type

(空白) (Blank)



LB



FA

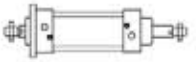

TC

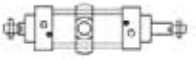

TC-M

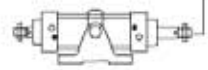

适用于
Available
Φ40～Φ100

举例/Sample

1)欲订购缸径为80mm，行程为250mm，使用黑色端盖，附磁，采用LB固定型式的双轴复动型(无拉杆式)气缸，其正确的订购代号为：BA-SUD-80x250-S-LB

1)If user needs bore 80 mm and 250 mm travel with magnet,LB fixed type,black end cap,standard double action cylinder without tie rod,the correct order code is:BA-SUD-80x250-S-LB

2)欲订购缸径为40mm，行程为100mm，使用EU防尘盖，不附磁，采用FA固定型式的双轴复动型(无拉杆式)气缸，其正确的订购代号为：SUED-40x100-FA

2)If user needs bore 40 mm and 100 mm travel without magnet,EU anti-dust wiper,FA fixed type, standard double action cylinder without tie rod,the correct order code is:SUED-40x100-FA

基本尺寸/Basic specification

Φ32～Φ100

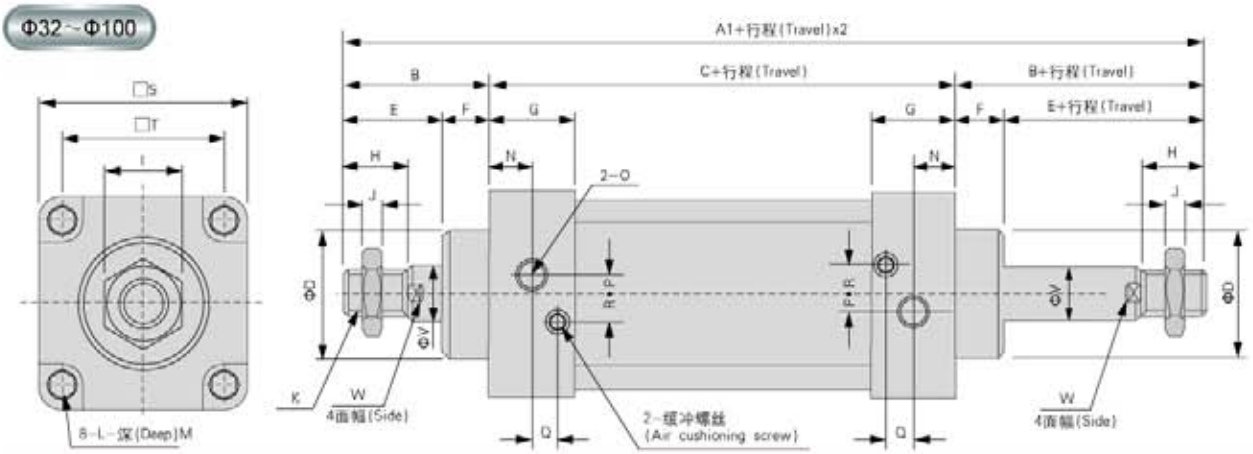

内径/符号(Bore/Symbol)	A1	B	C	D	E	F	G	H	I	J	K	L
32	187	47	93	28	32	15	27.5	22	17	6	M10 x 1.25	M6x1
40	191	49	93	32	34	15	27.5	24	17	7	M12 x 1.25	M6x1
50	207	57	93	38	42	15	27.5	32	23	8	M16 x 1.5	M6x1
63	210	57	96	38	42	15	27.5	32	23	8	M16 x 1.5	M8x1.25
80	258	75	108	47	54	21	33	40	26	10	M20 x1.5	M10x1.5
100	264	75	114	47	54	21	33	40	26	10	M20 x1.5	M10x1.5

内径/符号(Bore/Symbol)	M	N	O	P	Q	R	S	T	V	W
32	9.5	13.7	PT1/8	3.5	7.5	7	45	33	12	10
40	9.5	13.5	PT1/4	6	8.2	9	50	37	16	13
50	9.5	13.5	PT1/4	8.5	8.2	9	62	47	20	17
63	9.5	13.5	PT3/8	7	8.2	8.5	75	56	20	17
80	11.5	16.5	PT3/8	10	9.5	14	94	70	25	22
100	11.5	16.5	PT1/2	11	9.5	14	112	84	25	22

SUJ:双轴可调系列/SUJ:DOUBLE PISTON ROD WITH ADJUSTABLE TRAVEL SERIES

订购码/Ordering code

BA-SUJ —— 50 X 50 —— 25 —— S —— LB

型 号/Symbol

BA-SUJ:标准复动型(黑色标准端盖，无拉杆式)
BA-SUJ:standard double action cylinder(black end cap,cylinder without tie rod)
BY-SUJ:标准复动型(端盖带塑料盖，无拉杆式)
BY-SUJ:standard double action cylinder(end cap with plastic cover,cylinder without tie rod)
SUEJ:标准复动型(使用EU防尘圈，无拉杆式)
SUEJ:standard double action cylinder(adopted EU type rod tightness seals,cylinder without tie rod)

缸 径/Bore

行 程/Travel

调整行程 Adjustable Travel

25：25mm
50：50mm
75：75mm

磁石代号 Magnet code

S：附磁石
S:With magnet
空白：不附磁
Blank:Without magnet

固定型式/Mounting type

(空白) (Blank)

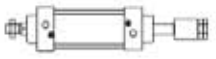

LB

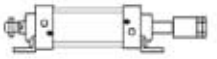

FA

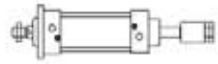

TC

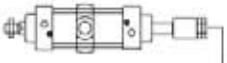

TC-M

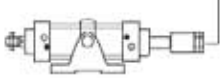

适用于 Available Φ40～Φ100

举例/Sample

1)欲订购缸径为80mm，行程为250mm，调整行程为25mm，使用黑色端盖，附磁，采用LB固定型式的双轴复动可调型(无拉杆式)气缸，其正确的订购代号为：BA-SUJ-80x250-25-S-LB

1)If user needs bore 80 mm and 250 mm travel with magnet,adjustable travel 25 mm,LB fixed type,double shafts,double action,adjustable cylinder(internal-mounted)without tie rod,the correct order code is：BA-SUJ-80x250-25-S-LB

2)欲订购缸径为40mm，行程为100mm，调整行程为25mm，使用EU防尘盖，不附磁，采用FA固定型式的双轴复动可调型(无拉杆式)气缸，其正确的订购代号为：SUEJ-40x100-25-FA

2)If user needs bore 40 mm and 1000 mm travel without magnet，adjustable travel 25 mm，EU anti-dust wiper,FA fixed type,double shafts,double action,adjustable cylinder(internal-mounted) without tie rod,the correct order code is：SUEJ-40x100-25-FA

基本尺寸/Basic specification

Φ32～Φ100

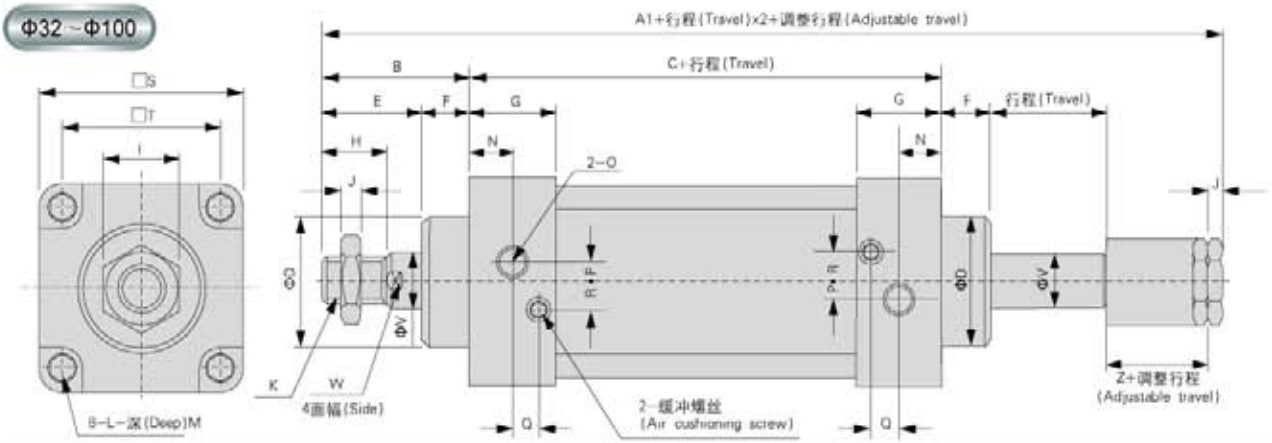

内径/符号(Bore/Symbol)	A1	B	C	D	E	F	G	H	I	J	K	L
32	182	47	93	28	32	15	27.5	22	17	6	M10 x 1.25	M6x1
40	185	49	93	32	34	15	27.5	24	17	7	M12 x 1.25	M6x1
50	196	57	93	38	42	15	27.5	32	23	8	M16 x 1.5	M6x1
63	199	57	96	38	42	15	27.5	32	23	8	M16 x 1.5	M8x1.25
80	243	75	108	47	54	21	33	40	26	10	M20 x1.5	M10x1.5
100	249	75	114	47	54	21	33	40	26	10	M20 x1.5	M10x1.5

内径/符号(Bore/Symbol)	M	N	O	P	Q	R	S	T	V	W	Z
32	9.5	13.7	PT1/8	3.5	7.5	7	45	33	12	10	21
40	9.5	13.5	PT1/4	6	8.2	9	50	37	16	14	21
50	9.5	13.5	PT1/4	8.5	8.2	9	62	47	20	17	23
63	9.5	13.5	PT3/8	7	8.2	8.5	75	56	20	17	23
80	11.5	16.5	PT3/8	10	9.5	14	94	70	25	22	29
100	11.5	16.5	PT1/2	11	9.5	14	112	84	25	22	29

感应开关/Sensor switch

订购码/Ordering code



相关尺寸/Specification

CS1-F

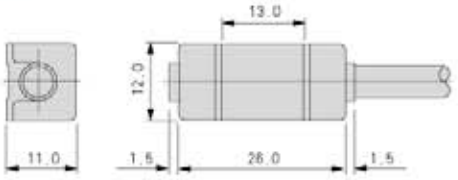

CS1-U

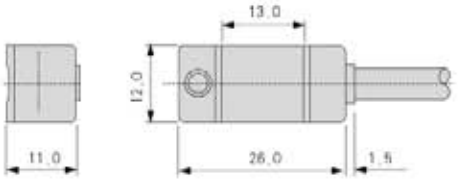

接线图/Wiring diagram

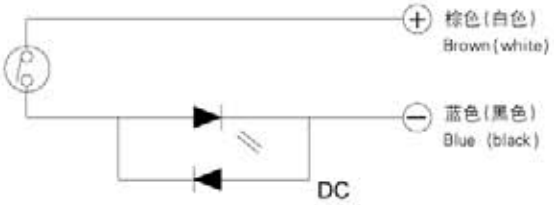

规　格/Specification

感应开关型式 Model	使用电压范围 Available voltage	使用电流范围 Available current	反应时间 Reflect time	抗冲击性 Anti concussion	耐震程度 Seismic degree	使用温度范围 Available temperature	保护等级 Protect rate	指示灯 Light	电线长度 Wire length	寿命 Life time
CS1-F CS1-U	DC:5V-240V AC:5V~380V	DC:5-60mA AC:5~50mA	最大1ms MAX 1ms	300m/S² (30G)	10~55Hz	0~60°C	IP-67	LED	2M	至少500万次 At least 5 million times

订购码/Ordering code

CS1 —— U

CS1 型号/Model

CS1 气缸用磁性开关
CS1 Sensor switch

U 型式/Type

F:向前型/Front type
U:向上型/Up type

UH 型号/Model

UH:标准气缸(无拉杆式)
感应开关固定座
Standard cylinder(without
tie-rod)sensor install bracket

40 气缸内径/Bore

32:32mm
40:40mm
50:50mm
63:63mm
80:80mm
100:100mm

举例/Sample

1) 欲订购与标准气缸(无拉杆式)配套，型式为向上型的磁感应开关。其正确的订购码代号为：CS1-U。
1) If user need upside magnet sensor switch which used for standard cylinder (without tie-rod) the correct ordering code is CS1-U.

2) 欲订购与缸径为63mm的标准气缸(无拉杆式)配套的磁感应开关固定座。其正确的订购码代号为：UH-63。
2) If user need magnet sensor switch install bracket which used for bore 63mm standard cylinder(without tie-rod) the correct code is UH-63.

安装与使用/Install&use

- 工作中负载有变化，应选用输出力充裕的气缸，在高温条件下，应选用相应的耐高温气缸。
  The load would be changed during working process,so the cylinder with enough output force should be chosen ,on the case of high temperature , operator is suggested to choose the cylinder with high-temp seals!

- 气缸配管前，必须清除管道内的杂物，防止杂物进入气缸内。
  Before put in the air tube on the cylinder ,the inside surface of the pipe must be cleaned .In order to prevent sundries from entering into cylinder.

- 气缸使用介质应经过40μm以上滤芯过滤后方可使用。
  The medium used by cylinder can not be put into use until it has pass filtering by certain filtering element above 40um.

- 在低温环境下，应采取抗冻措施，防止系统的水分结冰。
  Under condition of low temperature ,the anti-freezing measure must be adopted ,so as to avoid freezing of engineering system.

- 气缸使用前经空载试运转，运转前将缓冲调至最小，逐步放松，以免产生过大冲击而损害气缸。
  The idling test should be done before operating of cylinder, before test the cushion screw must be adjusted to the minimum, then increased gradually ,so as to avoid super-large shock and break the cylinder!

- 气缸在工作过程中应尽可能避免受侧向负载，以维持气缸的正常工作和使用寿命。
  During the working process ,the cylinder should be avoid side-load,in order to maintain normal working and assure the lifetime of the cylinder.

- 气缸拆下长时间不使用，要注意表面防锈，进排气口应加防尘堵塞帽。
  If the cylinder has been out of work for a long time ,operator should take notice of surface rustproof,the dust proof cap is suggested to be added at air in and out hole .

气缸理论出力计算方法/Formula for cylinder output power

$$F = P \times A$$

- A：活塞受压面积/Piston pressed area (cm^2)
- P：工作压力/Working pressure (Kgf/cm^2)
- F：气缸理论出力/The output power of cylinder (Kgf)

技术资料/Technical data

气缸理论出力表/Table for theoretic power of a cylinder

气缸内径 Cylinder ID	活塞杆外径 Out diameter of piston rod	动作方式 Action type		受压面积 Pressure area (cm^2)	空气压力/Air pressure (kgf/cm^2)								
					1	2	3	4	5	6	7	8	9
32	12	复动型(Double acting)	压侧/Push side	8.04	8.04	16.08	24.12	32.16	40.20	48.24	56.28	64.32	72.36
			拉侧/Pull side	6.90	6.90	13.80	20.70	27.60	34.50	41.40	48.30	55.20	62.10
40	16		压侧/Push side	12.56	12.56	25.12	37.68	50.24	62.80	75.36	87.92	100.48	113.04
			拉侧/Pull side	10.55	10.55	21.10	31.65	42.20	52.75	63.30	73.85	84.40	94.95
50	20		压侧/Push side	19.63	19.63	39.26	58.89	78.52	98.15	117.78	137.41	157.04	176.67
			拉侧/Pull side	16.49	16.49	32.98	49.47	65.96	82.45	98.94	115.43	131.92	148.41
63	20		压侧/Push side	31.17	31.17	62.34	93.51	124.68	155.85	187.02	218.19	249.36	280.53
			拉侧/Pull side	28.03	28.03	56.06	84.09	112.12	140.15	168.18	196.21	224.24	252.27
80	25		压侧/Push side	50.26	50.26	100.52	150.78	201.04	251.30	301.56	351.82	402.08	452.34
			拉侧/Pull side	45.36	45.36	90.72	136.08	181.44	226.80	272.16	317.52	362.88	408.24
100	25		压侧/Push side	78.53	78.53	157.06	235.59	314.12	392.65	471.18	549.71	628.24	706.77
			拉侧/Pull side	73.62	73.62	147.24	220.86	294.48	368.10	441.72	515.34	588.96	662.58

规 格/Specification

内径/Bore (mm)	32	40	50	63	80	100
动作型式/Action type	复动型/Double action					
工作介质/Work medium	空 气/Filtered air					
固定型式/Mounting type	基本型/Basic type FA型/Type FB型/Type CA型/Type CB型/Type LB型/Type TC型/Type TC-M型/Type					
使用压力范围/Operation pressure range(Kgf/cm^2)	1～9.0					
保证耐压力/Proof pressure(Kgf/cm^2)	13.5					
使用温度范围/Available temperature ℃	-5～70					
使用速度范围/Operation speed (mm/s)	50～800					
缓冲型式/Cushioning	可调缓冲/Adjustable cushioning					
缓冲行程/Cushioning travel (mm)	24					
接管口径/Port size	PT1/8	PT1/4		PT3/8		PT1/2

行 程/Travel

内径/Bore(mm)	标准行程 / Standard travel	最大行程 Max travel	容许行程 Available travel
32	25 50 75 100 125 150 175 200 250 300 350 400 450 500	1000	2000
40	25 50 75 100 125 150 175 200 250 300 350 400 450 500 600 700 800	1200	2000
50	25 50 75 100 125 150 175 200 250 300 350 400 450 500 600 700 800 900 1000	1200	2000
63	25 50 75 100 125 150 175 200 250 300 350 400 450 500 600 700 800 900 1000	1500	2000
80	25 50 75 100 125 150 175 200 250 300 350 400 450 500 600 700 800 900 1000	1500	2000
100	25 50 75 100 125 150 175 200 250 300 350 400 450 500 600 700 800 900 1000	1500	2000

※ 特殊行程请与本公司联系/Special travel should checked with our factory

标准气缸SC系列
STANDARD CYLINDER SC SERIES

BANGYE®

产品特性/Product features

免润滑/Free of lubrication

采用含油轴承，使活塞杆无需加油润滑/Oil bearing is adopted so the piston rod do not need to be lubricated.

缓冲性/Cushion

除带固定缓冲外，气缸终端还带可调缓冲，使气缸换向时平稳无冲击
Besides fixed buffer, the cylinder terminal has adjustable cushion screw, so that the cylinder enters into stably without impact during commute direction .

耐高温性/High temperature available

可采用耐高温密封材料，使气缸在150摄氏度高温条件下正常工作(客户需向本公司订作)/Adopted of special sealing material, the cylinder can work normally at 150 degree(user should order it from us).

安装型式多样/Various mounting type

多种安装附件供客户选择/Various mounting accessories are supplied.

附磁性/Magnetic property

气缸活塞上装有一个永久磁铁，它可触发安装在气缸上的磁性开关来感测气缸的运动位置/The cylinder piston is equipped with a permanent magnet that can trigger the magnetic switch of the cylinder to detect the moving position of cylinder.



符 号/Symbol

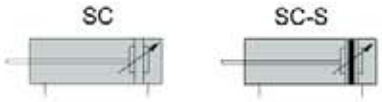

内部结构及主要零件材质/Inner structure and material list for main parts

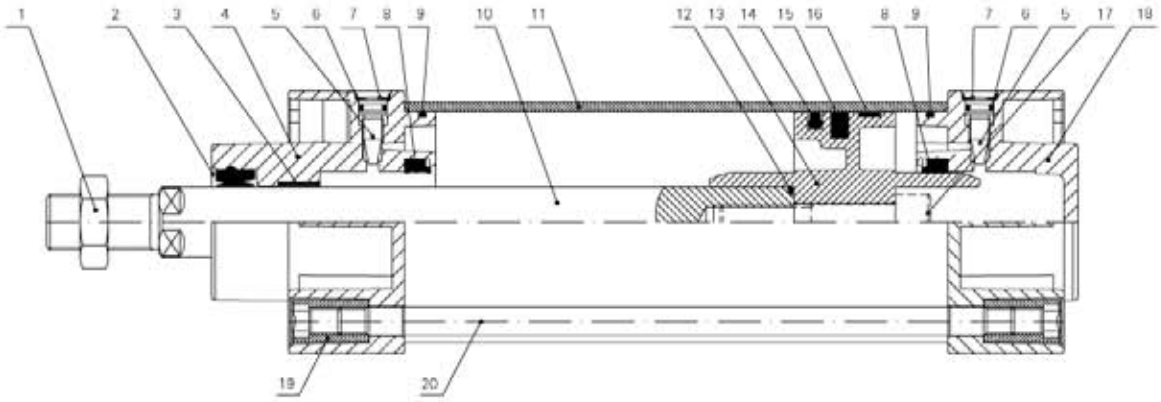

序号/No	名称/Name	材质/Material	序号/No	名称/Name	材质/Material
1	活塞杆螺帽/Nut for piston rod	碳钢/Carbon steel	11	缸筒/Tube	铝合金/Aluminium alloy
2	防尘圈/Anti dust seals	PU	12	活塞杆O型圈/O-ring for piston rod	NBR
3	含油轴承/Oil bearing	铜基粉法合金/Sinterized bronze	13	活塞/Piston	铝合金/Aluminium alloy
4	前端盖/Front cover	铝合金/Aluminium alloy	14	活塞圈/Piston ring	NBR
5	针阀/Air cushioning screw	黄铜/Brass	15	磁环/Magnet	铁氧体/Ferrite
6	针阀O型圈/O-ring for air cushioning screw	NBR	16	导向带/Wearing ring	POM
7	针阀卡环/Anti for air cushion hole screw	弹簧钢/Spring steel	17	活塞固定螺丝/Piston fixing screw	碳钢/Carbon steel
8	缓冲圈/Cushioning seals	NBR	18	后端盖/Back cover	铝合金/Aluminium alloy
9	管壁O型圈/O-ring for front cover	NBR	19	支柱螺帽/Tie rod nut	碳钢/Carbon steel
10	活塞杆/Piston rod	碳钢/Carbon steel	20	支柱/Tie rod	碳钢/Carbon steel

订购码/Ordering code

BA-SC —— 50 X 50 —— S —— LB

- BA-SC：型 号/Symbol
- 50：缸 径/Bore
- 50：行 程/Travel
- S：磁石代号/Magnet code
- LB：固定型式/Mounting type

BA-SC:标准复动型（黑色标准端盖，拉杆式）
BA-SC:standard double action cylinder (black end cap, cylinder with tie rod)
BY-SC:标准复动型（端盖带塑料盖，拉杆式）
BY-SC:standard double action cylinder(end cap with plastic cover and cylinder with tie rod)
SCE:标准复动型（使用EU防尘圈，拉杆式）
SCE:standard double action cylinder(adoped EU type rod tightness seals, cylinder with tie rod)

S：附磁石
S:With magnet
空白：不附磁
Blank:without magnet

固定型式/Mounting type

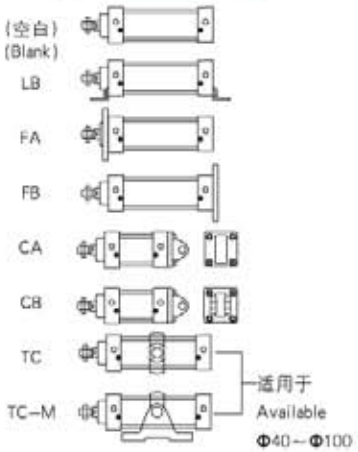

举例/Sample

1)欲订购缸径为50mm，行程为50mm，使用黑色端盖，附磁，采用TC固定型式的标准复动型(拉杆式）气缸，其正确的订购代号为：BA-SC-50x50-S-TC

1)If user needs bore 50 mm and 50 mm travel with magnet, TC fixed type, standard double action cylinder(tie rod type),the correct order code is:BA-SC-50x50-S-TC

2)欲订购缸径为63mm，行程为80mm，使用EU防尘盖，附磁，采用LB固定型式的标准复动型（拉杆式）气缸，其正确的订购代号为：SCE-63x80-S-LB

2)If user needs bore 63 mm and 80 mm travel with magnet,EU anti-dust wiper,LB fixed type,standard double action cylinder(tie rod type),the correct order code is:SCE-63x80-S-LB

基本尺寸/Basic specification

Φ32～Φ100

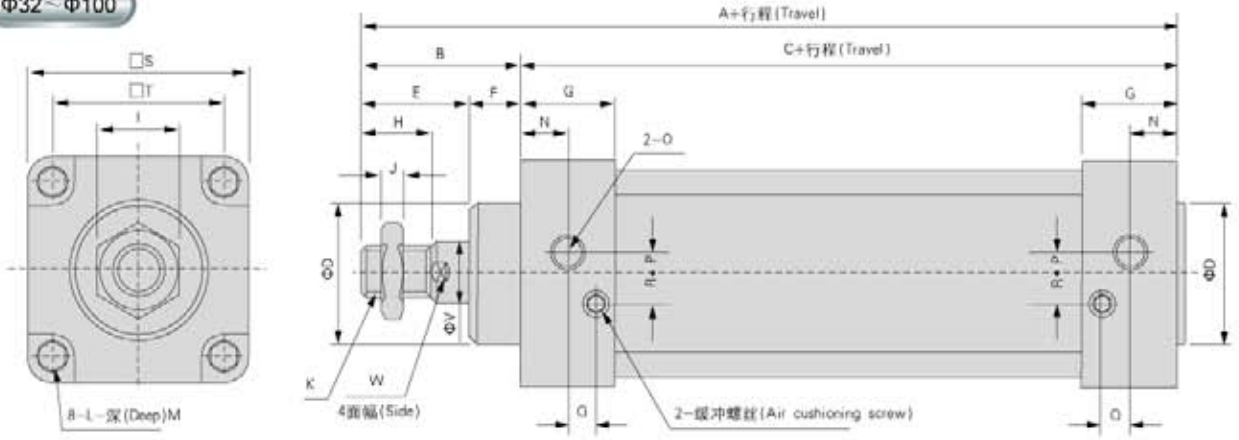

内径/符号(Bore/Symbol)	A	B	C	D	E	F	G	H	I	J	K	L
32	140	47	93	28	32	15	27.5	22	17	6	M10 x 1.25	M6x1
40	142	49	93	32	34	15	27.5	24	17	7	M12 x 1.25	M6x1
50	150	57	93	38	42	15	27.5	32	23	8	M16 x 1.5	M6x1
63	153	57	96	38	42	15	27.5	32	23	8	M16 x 1.5	M8x1.25
80	183	75	108	47	54	21	33	40	26	10	M20 x1.5	M10x1.5
100	189	75	114	47	54	21	33	40	26	10	M20 x1.5	M10x1.5

内径/符号(Bore/Symbol)	M	N	O	P	Q	R	S	T	V	W
32	9.5	13.7	PT1/8	3.5	7.5	7	45	33	12	10
40	9.5	13.5	PT1/4	6	8.2	9	50	37	16	14
50	9.5	13.5	PT1/4	8.5	8.2	9	62	47	20	17
63	9.5	13.5	PT3/8	7	8.2	8.5	75	56	20	17
80	11.5	16.5	PT3/8	10	9.5	14	94	70	25	22
100	11.5	16.5	PT1/2	11	9.5	14	112	84	25	22

SCD：双轴系列/SCD：DOUBLE PISTON ROD SERIES

订购码/Ordering code

BA-SCD —— 50 X 50 —— S —— LB

型 号/Symbol

BA-SCD:标准复动型（黑色标准端盖，拉杆式）
BA-SCD:standard double action cylinder (black end cap, cylinder with tie rod)
BY-SCD:标准复动型（端盖带塑料盖，拉杆式）
BY-SCD:standard double action cylinder(end cap with plastic cover and cylinder with tie rod)
SCED:标准复动型（使用EU防尘圈，拉杆式）
SCED:standard double action cylinder(adoped EU type rod tightness seals, cylinder with tie rod)

缸 径/Bore

行 程/Travel

磁石代号/Magnet code

S：附磁石
S:With magnet
空白：不附磁
Blank:without magnet

固定型式/Mounting type

（空白）(Blank)
LB
FA
TC
TC-M

适用于 Available Φ40－Φ100

举例/Sample

1)欲订购缸径为80mm，行程为250mm，使用黑色端盖，附磁，采用LB固定型式的双轴复动型(拉杆式)气缸，其正确的订购代号为：BA-SCD-80x250-S-LB

1)If user needs bore 80 mm and 250 mm travel with magnet,black end cap, LB fixed type,double piston rod standard double action cylinder (tie-rod type), the correct order code is: BA-SCD-80x250-S-LB

2)欲订购缸径为40mm，行程为100mm，使用EU防尘圈，不附磁，采用FA固定型式的双轴复动型(拉杆式)气缸，其正确的订购代号为：SCED-40x100-FA

2)If user needs bore 40 mm and 100 mm travel without magnet,adopted EU type rod tightness seals,FA fixed type double piston rod standard double action cylinder(tie-rod type),the correct order code is:SCED-40x100-FA

基本尺寸/Basic specification

Φ32～Φ100

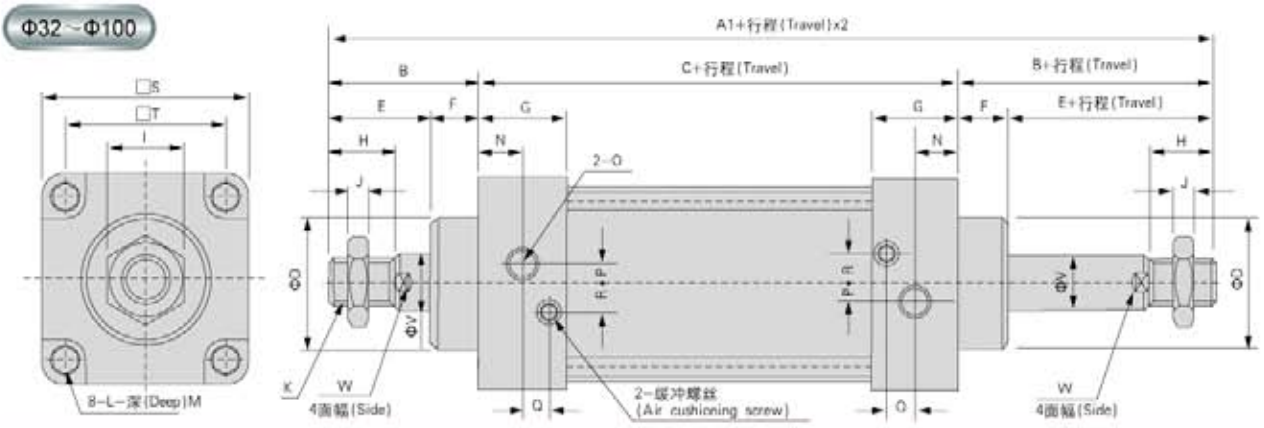

内径/符号(Bore/Symbol)	A1	B	C	D	E	F	G	H	I	J	K	L
32	187	47	93	28	32	15	27.5	22	17	6	M10 x 1.25	M6x1
40	191	49	93	32	34	15	27.5	24	17	7	M12 x 1.25	M6x1
50	207	57	93	38	42	15	27.5	32	23	8	M16 x 1.5	M6x1
63	210	57	96	38	42	15	27.5	32	23	8	M16 x 1.5	M8x1.25
80	258	75	108	47	54	21	33	40	26	10	M20 x1.5	M10x1.5
100	264	75	114	47	54	21	33	40	26	10	M20 x1.5	M10x1.5

内径/符号(Bore/Symbol)	M	N	O	P	Q	R	S	T	V	W
32	9.5	13.7	PT1/8	3.5	7.5	7	45	33	12	10
40	9.5	13.5	PT1/4	6	8.2	9	50	37	16	14
50	9.5	13.5	PT1/4	8.5	8.2	9	62	47	20	17
63	9.5	13.5	PT3/8	7	8.2	8.5	75	56	20	17
80	11.5	16.5	PT3/8	10	9.5	14	94	70	25	22
100	11.5	16.5	PT1/2	11	9.5	14	112	84	25	22

SCJ:双轴可调系列/SCJ:DOUBLE PISTON ROD WITH ADJUSTABLE TRAVEL SERIES

订购码/Ordering code

BA-SCJ —— 50 X 50 —— 25 —— S —— LB

型 号/Symbol

BA-SCJ:标准复动型（黑色标准端盖，拉杆式）
BA-SCJ,standard double action cylinder (black end cap，cylinder with tie rod)
BY-SCJ:标准复动型（端盖带塑料盖，拉杆式）
BY-SCJ,standard double action cylinder(end cap with plastic cover and cylinder with tie rod)
SCEJ:标准复动型（使用EU防尘圈，拉杆式）
SCEJ,standard double action cylinder(adopted EU type rod tightness seals，cylinder with tie rod)

缸 径/Bore

行 程/Travel

调整行程 Adjustable travel

25：25mm
50：50mm
75：75mm

磁石代号 Magnet code

S：附磁石
S:With magnet
空白：不附磁
Blank:without magnet

固定型式/Mounting type

（空白）(Blank)
LB
FA
TC
TC-M

适用于 Available Φ40－Φ100

举例/Sample

1)欲订购缸径为80mm，行程为250mm，调整行程为25mm，使用黑色端盖，附磁，采用LB固定型式的双轴复动可调型（拉杆式）气缸，其正确的订购代号为：BA-SCJ-80x250-25-S-LB

1)If user needs bore 80 mm and 250 mm travel with adjustable travel 25mm with magnet,black end cap, LB fixed type,double piston rod,double action adjustable cylinder(tie-rod type),the correct order code is:BA-SCJ-80x250-25-S-LB

2)欲订购缸径为40mm，行程为100mm，调整行程为25mm,使用EU防尘盖，不附磁,采用FA固定型式的双轴复动可调型(拉杆式)气缸，其正确的订购代号为：SCEJ-40x100-25-FA

2)If user needs bore 40 mm and 100 mm travel with adjustable travel 25mm without magnet,EU anti-dust wiper,FA fixed type,double shafts,double piston rod adjustable cylinder(tie-rod type),the correct order code is:SCEJ-40x100-25-FA

基本尺寸/Basic specification

Φ32～Φ100

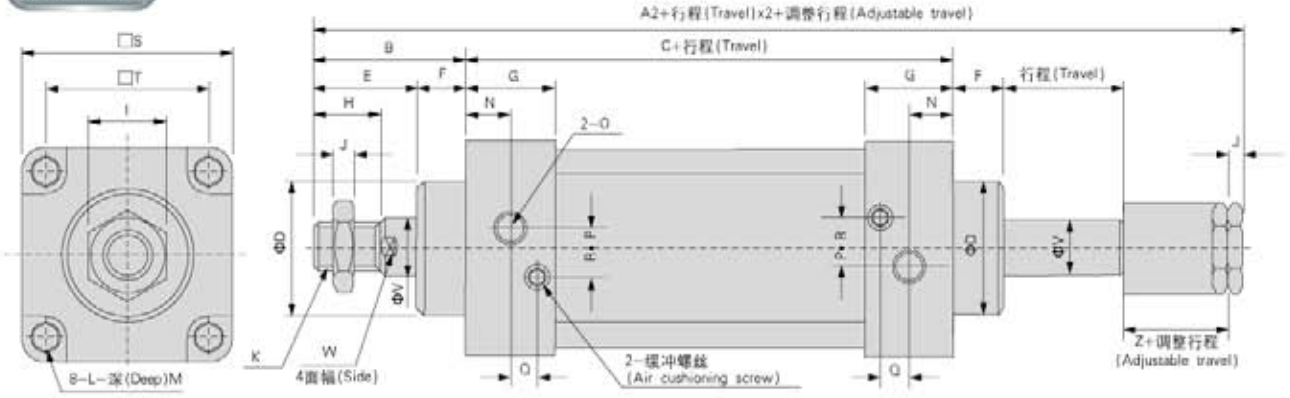

内径/符号(Bore/Symbol)	A2	B	C	D	E	F	G	H	I	J	K	L
32	182	47	93	28	32	15	27.5	22	17	6	M10 x 1.25	M6x1
40	185	49	93	32	34	15	27.5	24	17	7	M12 x 1.25	M6x1
50	196	57	93	38	42	15	27.5	32	23	8	M16 x 1.5	M6x1
63	199	57	96	38	42	15	27.5	32	23	8	M16 x 1.5	M8x1.25
80	243	75	108	47	54	21	33	40	26	10	M20 x1.5	M10x1.5
100	249	75	114	47	54	21	33	40	26	10	M20 x1.5	M10x1.5

内径/符号(Bore/Symbol)	M	N	O	P	Q	R	S	T	V	W	Z
32	9.5	13.7	PT1/8	3.5	7.5	7	45	33	12	10	21
40	9.5	13.5	PT1/4	6	8.2	9	50	37	16	13	21
50	9.5	13.5	PT1/4	8.5	8.2	9	62	47	20	17	23
63	9.5	13.5	PT3/8	7	8.2	8.5	75	56	20	17	23
80	11.5	16.5	PT3/8	10	9.5	14	94	70	25	22	29
100	11.5	16.5	PT1/2	11	9.5	14	112	84	25	22	29

SCT：多位置系列/SCT：MULTI-POSITION SERIES

订购码/Ordering code

BA-SCT —— 50 X 50 X 50 —— S —— LB

- BA-SCT：型 号/Symbol
- 50：缸 径/Bore
- 50：行 程1/Travel 1
- 50：行 程2/Travel 2
- S：磁石代号/Magnet code
- LB：固定型式/Mounting type

BA-SCT：标准复动型（黑色标准端盖，拉杆式）
BA-SCT：standard double action cylinder (black end cap, cylinder with tie rod)
BY-SCT：标准复动型（端盖等塑料盖，拉杆式）
BY-SCT：standard double action cylinder(end cap with plastic cover and cylinder with tie rod)
SCET：标准复动型（使用EU防尘圈，拉杆式）
SCET：standard double action cylinder(adoped EU type rod tightness seals, cylinder with tie rod)

S：附磁石
S：With magnet
空白：不附磁
Blank：without magnet

(空白) (Blank)

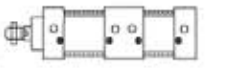

LB

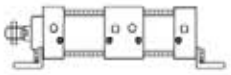

举例/Sample

1）欲订购缸径为63mm，行程1为80mm，行程2为50mm，使用黑色端盖，附磁，采用LB固定型式的多位置复动型（拉杆式）气缸，其正确的订购代号为：BA-SCT-63X80X50-S-LB

1）If user needs bore 63 mm, first travel 80 mm travel, second travel 50 mm, with magnet, black end cap, LB fixed type, multi-positions, double action cylinder (tie-rod type), the correct order code is: BA-SCT-63X80X50-S-LB

2）欲订购缸径为80mm，行程为80mm，行程2为50mm，使用EU防尘圈，不附磁，采用LB固定型式的多位置复动型（拉杆式）气缸，其正确的订购代号为：SCET-80X80X50-LB

2）If user needs bore 80 mm, first travel 80 mm travel, second travel 50 mm, without magnet, EU anti-dust wiper, LB fixed type, multi-positions, double action cylinder (tie-rod type), the correct order code is: SCET-80X80X50-LB

基本尺寸/Basic specification

Φ32～Φ100

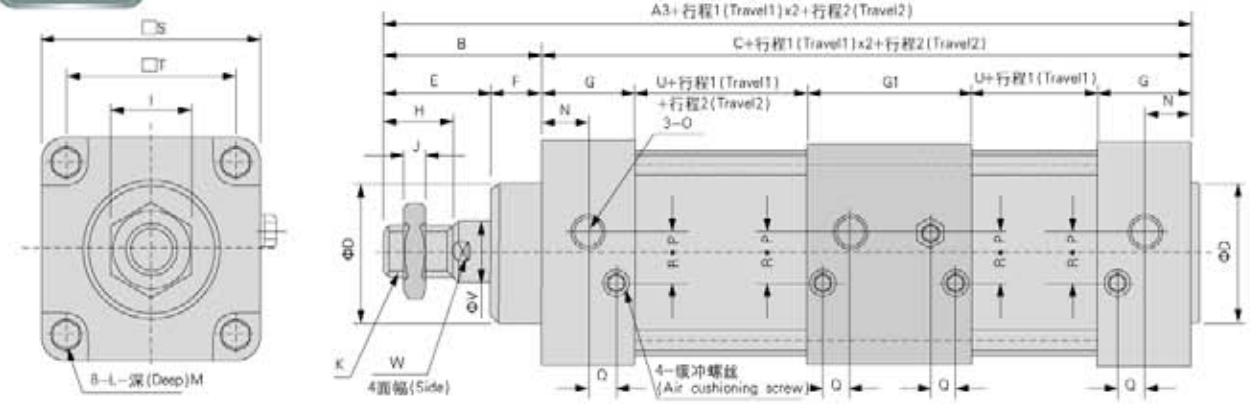

内径/符号(Bore/Symbol)	A3	B	C	D	E	F	G	G1	H	I	J	K	L
32	233	47	186	28	32	15	27.5	55	22	17	6	M10 x 1.25	M6x1
40	235	49	186	32	34	15	27.5	55	24	17	7	M12 x 1.25	M6x1
50	243	57	186	38	42	15	27.5	55	32	23	8	M16 x 1.5	M6x1
63	249	57	192	38	42	15	27.5	55	32	23	8	M16 x 1.5	M8x1.25
80	290	75	216	47	54	21	33	66	40	26	10	M20 x1.5	M10x1.5
100	302	75	228	47	54	21	33	66	40	26	10	M20 x1.5	M10x1.5

内径/符号(Bore/Symbol)	M	N	O	P	Q	R	S	T	V	U	W
32	9.5	13.7	PT1/8	3.5	7.5	7	45	33	12	38	10
40	9.5	13.5	PT1/4	6	8.2	9	50	37	16	38	14
50	9.5	13.5	PT1/4	8.5	8.2	9	62	47	20	38	17
63	9.5	13.5	PT3/8	7	8.2	8.5	75	56	20	41	17
80	11.5	16.5	PT3/8	10	9.5	14	94	70	25	41	22
100	11.5	16.5	PT1/2	11	9.5	14	112	84	25	47	22

安装附件/Mounting kits

LB型尺寸/LB Size

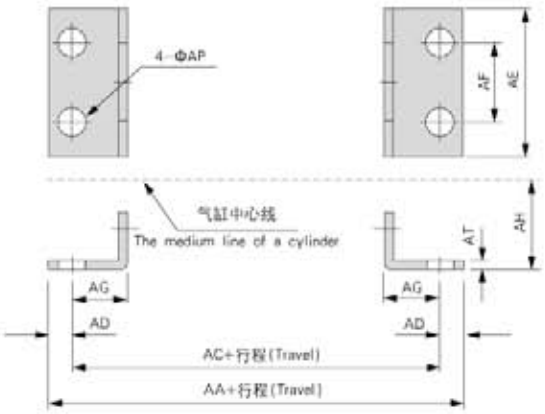

符号/内径 (Symbol/Bore)	32	40	50	63	80	100
AA	153	169	173	184	200	210
AC	134	140	149	158	168	174
AD	9.5	14.5	12	13	16	18
AE	50	57	68	80	97	112
AF	33	36	47	56	70	84
AG	20.5	23.5	28	31	30	30
AH	28	30	36.5	41	49	57
AP	9	12	12	12	14	14
AT	3	3	3	3	4	4

FA型尺寸/FA Size

FB型尺寸/FB Size

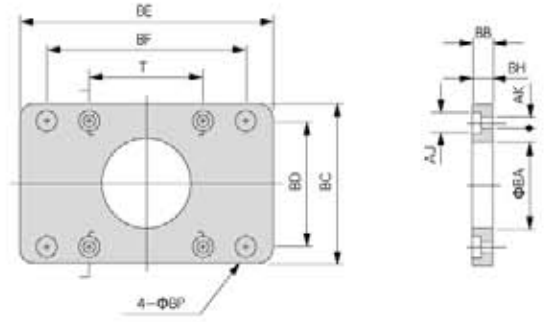

符号/内径 (Symbol/Bore)	32	40	50	63	80	100
BA	28.3	32.3	38.3	38.3	47.3	47.3
BB	10	10	10	12	16	16
BC	47	52	65	76	95	115
BD	33	36	47	56	70	84
BE	72	84	104	116	143	162
BF	58	70	86	98	119	138
BH	6.5	6.5	6.5	8.5	10.5	10.5
AJ	10.5	10.5	10.5	13.5	16.5	16.5
AK	6.5	6.5	6.5	8.5	10.5	10.5
BP	7	7	9	9	11	11
T	33	37	47	56	70	84

CA型尺寸/CA Size

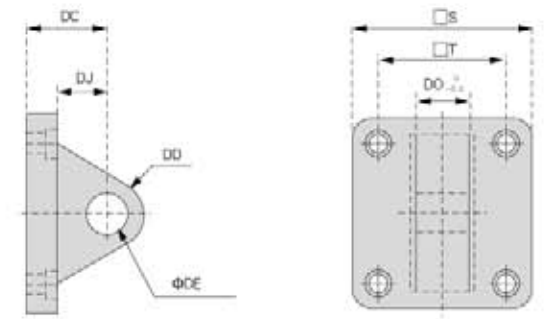

符号/内径 (Symbol/Bore)	32	40	50	63	80	100
S	48	50	62	75	94	112
T	33	37	47	56	70	84
DC	34	34	34	34	48	48
DD	14	14	15	15	20	20
DE	12	14	14	14	20	20
DJ	24	24	24	24	34	34
DO	16	20	20	20	32	32

安装附件/Mounting kits

CB型尺寸/CB Size

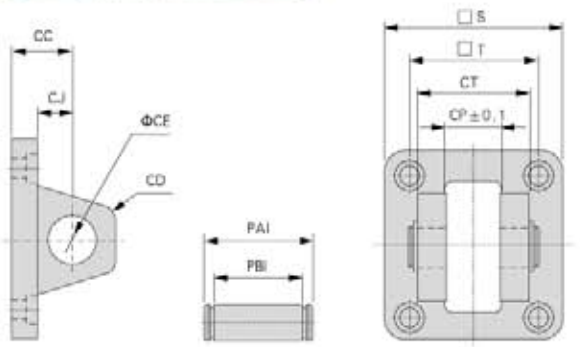

符号/内径 (Symbol/Bore)	32	40	50	63	80	100
CC	19	19	19	19	32	32
CD	5	5	3	3	8	8
CE	12	14	14	14	20	20
CJ	11	11	11	11	21	21
CP	16.3	20.3	20.3	20.3	32.3	32.3
CT	32	44	52	52	64	64
PAI	41	51.8	60.3	60.3	73.8	73.8
PBI	33.5	45.5	54	54	65.5	65.5
S	48	50	62	75	94	112
T	33	37	47	56	70	84

TC型尺寸/TC Size

SC系列用/Used for SC series

SU系列用/Used for SU series

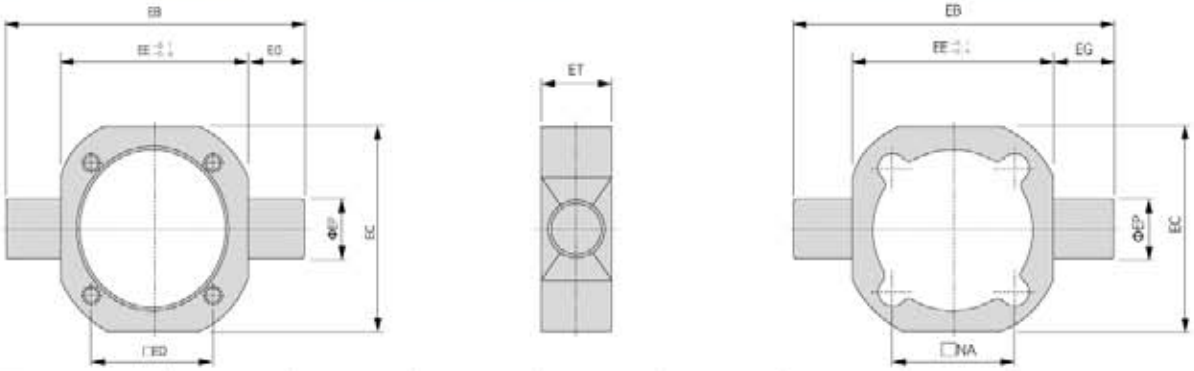

内径/符号(Bore/Symbol)	EB	EC	ED	EE	EG	EP	ET
40	113	63	37	63	25	25	30
50	126	76	47	76	25	25	30
63	138	88	56	88	25	25	30
80	164	114	70	114	25	25	35
100	182	132	84	132	25	25	40

TC-M型/Type

SU系列用/Used for SU series

TC-M系列用/Used for TC-M series

SC系列用/Used for SC series

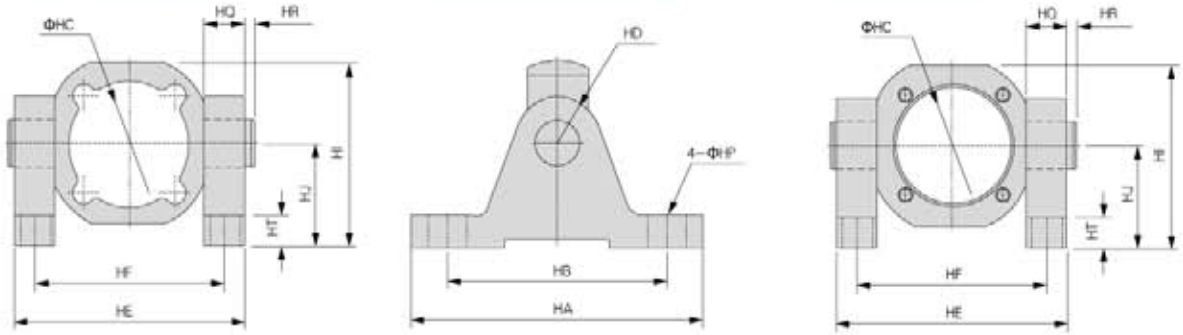

内径/符号(Bore/Symbol)	HA	HB	HC	HD	HE	HF	HI	HJ	HO	HR	HT	HP
40	110	80	45.5	22	109	86	81.5	50	23	2	12	12
50	110	80	55.5	22	122	99	88	50	23	2	12	12
63	110	80	68.5	22	134	111	94	50	23	2	12	12
80	120	85	87.5	22	160	137	127	70	23	2	14	14
100	120	85	107.5	22	178	155	136	70	23	2	14	14

联接附件/Connector kits

接头尺寸/Joint size

Y接头/Y Joint

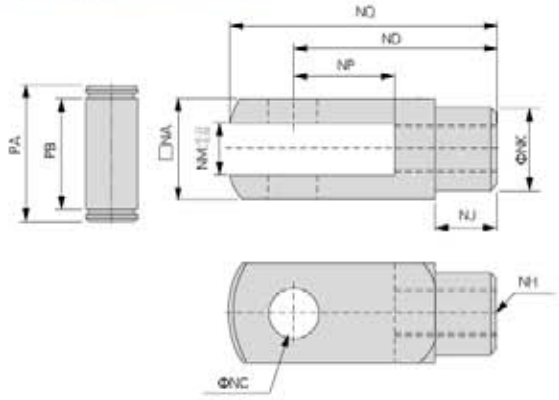

I 接头/I Joint

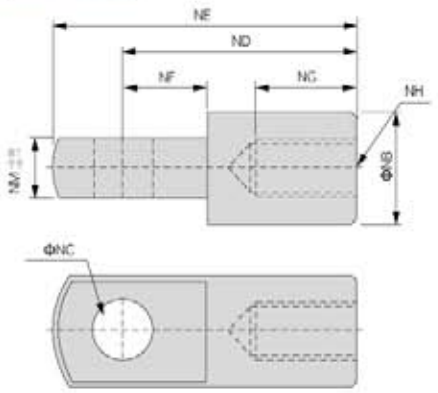

内径/符号(Bore/Symbol)	NA	NB	NC	ND	NE	NF	NG	NH	NJ	NK	NM	NP	NQ	PA	PB
32	19	20	10	40	52	15	20	M10X1.25	12	18	10	20	52	25	19.5
40	25.4	24	12	48	67	24	20	M12X1.25	20	23	12	24	62	32.8	26.5
50	32	32	16	64	89	32	23	M16X1.5	22	30	16	32	83	39.3	33
63	32	32	16	64	89	32	23	M16X1.5	22	30	16	32	83	39.3	33
80	44.4	40	20	80	112	40	30	M20X1.5	30	39	20	40	105	53.3	45
100	44.4	40	20	80	112	40	30	M20X1.5	30	39	20	40	105	53.3	45

浮动接头/Self-aligning bearings

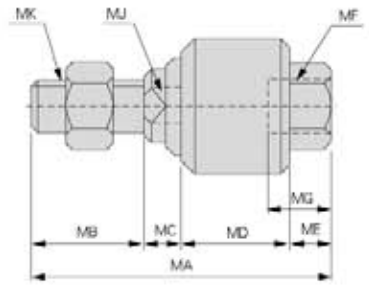

内径/符号(Bore/Symbol)	MA	MB	MC	MD	ME	MF	MG	MJ	MK
32	58	22	7	21	7	M10X1.25	12	10	M10X1.25
40	58	22	8	21	8	M12X1.25	12	12	M12X1.25
50	90	27	10	41	12	M16X1.5	14	15	M16X1.5
63	90	27	10	41	12	M16X1.5	14	15	M16X1.5
80	102	29	13	46	14	M20X1.5	18	22	M20X1.5
100	102	29	13	46	14	M20X1.5	18	22	M20X1.5

鱼眼接头/Ball joint ends

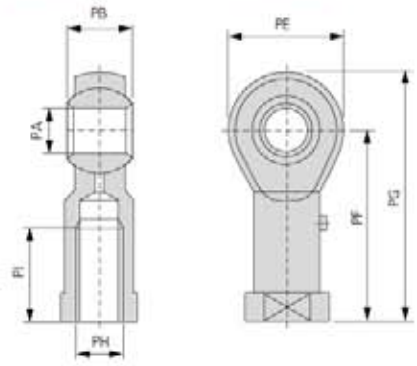

内径/符号(Bore/Symbol)	PA	PB	PE	PF	PG	PH	PI
32	10	14	26	43	56	M10X1.25	21
40	12	16	30	50	65	M12X1.25	24
50	16	21	38	64	83	M16X1.5	33
63	16	21	38	64	83	M16X1.5	33
80	20	25	46	77	100	M20X1.5	40
100	20	25	46	77	100	M20X1.5	40

感应开关/Sensor switch



相关尺寸/Specification

CS1-F

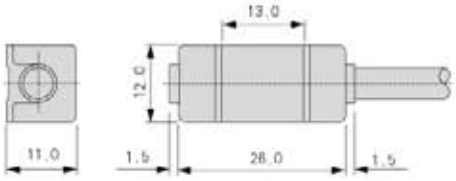

CS1-U

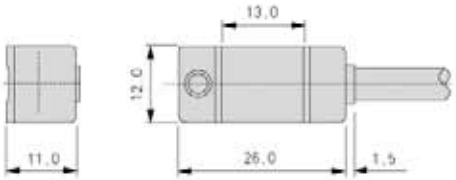

接线图/Wiring diagram

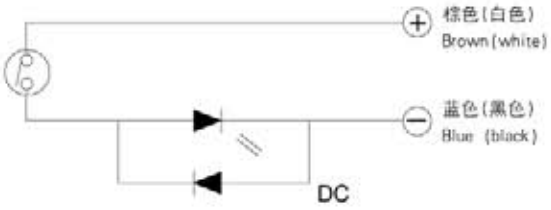

规　格/Specification

感应开关型式 Model	使用电压范围 Available voltage	使用电流范围 Available current	反应时间 Reflect time	抗冲击性 Anti concussion	耐震程度 Seismic degree	使用温度范围 Available temperature	保护等级 Protect rate	指示灯 Light	电线长度 Wire length	寿命 Life time
CS1-F CS1-U	DC:5V~240V AC:5V~380V	DC:5~60mA AC:5~50mA	最大1ms MAX 1ms	300m/S² (30G)	10~55Hz	0~60℃	IP-67	LED	2M	至少500万次 At least 5 million times

订购码/Ordering code

CS1 —— U

CS1 型号/Model

CS1 气缸用磁性开关
CS1 Sensor switch

U 型式/Type

F:向前型/Front type
U:向上型/Up type

SH 型号/Model

SH:标准气缸(拉杆式)
感应开关固定座
Standard cylinder
(tie-rod type)
install bracket

40 气缸内径/Bore

32:32mm
40:40mm
50:50mm
63:63mm
80:80mm
100:100mm

举例/Sample

1) 欲订购与标准气缸(拉杆式)配套，型式为向上型的磁感应开关。其正确的订购码代号为：CS1-U。
1) If user need upside magnet sensor switch which used for standard cylinder (tie-rod) the correct ordering code is CS1-U.

2) 欲订购与缸径为63mm的标准气缸(拉杆式)配套的磁感应开关固定座。其正确的订购码代号为：SH-63。
2) If user need magnet sensor switch install bracket which used for bore 63mm standard cylinder (tie-rod) the correct code is UH-63.

安装与使用/Install&use

- 工作中负载有变化，应选用输出力充裕的气缸，在高温条件下，应选用相应的耐高温气缸。
  The load would be changed during working process,so the cylinder with enough output force should be chosen ,on the case of high temperature , operator is suggested to choose the cylinder with high-temp seals!

- 气缸配管前，必须清除管道内的杂物，防止杂物进入气缸内。
  Before put in the air tube on the cylinder ,the inside surface of the pipe must be cleaned .In order to prevent sundries from entering into cylinder.

- 气缸使用介质应经过40μm以上滤芯过滤后方可使用。
  The medium used by cylinder can not be put into use until it has pass filtering by certain filtering element above 40um.

- 在低温环境下，应采取抗冻措施，防止系统的水分结冰。
  Under condition of low temperature ,the anti-freezing measure must be adopted ,so as to avoid freezing of engineering system.

- 气缸使用前经空载试运转，运转前将缓冲调至最小，逐步放松，以免产生过大冲击而损害气缸。
  The idling test should be done before operating of cylinder, before test the cushion screw must be adjusted to the minimum, then increased gradually ,so as to avoid super-large shock and break the cylinder!

- 气缸在工作过程中应尽可能避免受侧向负载，以维持气缸的正常工作和使用寿命。
  During the working process ,the cylinder should be avoid side-load,in order to maintain normal working and assure the lifetime of the cylinder.

- 气缸拆下长时间不使用，要注意表面防锈，进排气口应加防尘堵塞帽。
  If the cylinder has been out of work for a long time ,operator should take notice of surface rustproof,the dust proof cap is suggested to be added at air in and out hole .

气缸理论出力表/Table for theoretic power of a cylinder

气缸内径 Cylinder ID	活塞杆外径 Out diameter of piston rod	动作方式 Action type		受压面积 Pressure area (cm^2)	空气压力/Air pressure (Kgf/cm^2)								
					1	2	3	4	5	6	7	8	9
32	12	复动型 Double action	压侧 Push side	8.04	8.04	16.08	24.12	32.16	40.20	48.24	56.28	64.32	72.36
			拉侧 Pull side	6.90	6.90	13.80	20.70	27.60	34.50	41.40	48.30	55.20	62.10
40	16	复动型 Double action	压侧 Push side	12.56	12.56	25.12	37.68	50.24	62.80	75.36	87.92	100.24	113.04
			拉侧 Pull side	10.55	10.55	21.10	31.65	42.20	52.75	63.30	73.85	84.40	94.95
50	20	复动型 Double action	压侧 Push side	19.63	19.63	39.26	58.89	78.52	98.15	117.78	137.41	157.04	176.67
			拉侧 Pull side	16.49	16.49	32.98	49.47	65.96	82.45	98.94	115.43	139.92	148.41
63	20	复动型 Double action	压侧 Push side	31.17	31.17	62.34	93.51	124.68	155.85	187.02	218.19	249.36	280.53
			拉侧 Pull side	28.03	28.03	56.06	84.09	112.12	140.15	168.18	196.21	224.24	252.27
80	25	复动型 Double action	压侧 Push side	50.26	50.26	100.52	150.78	201.04	251.30	301.56	351.82	402.08	452.34
			拉侧 Pull side	45.36	45.36	90.72	136.08	181.44	226.80	272.16	317.52	362.88	408.24
100	25	复动型 Double action	压侧 Push side	78.53	78.53	157.06	235.59	314.12	392.65	471.18	428.82	628.24	706.77
			拉侧 pull side	71.47	71.47	142.94	214.41	285.88	357.35	428.82	500.29	571.76	643.23
125	32	复动型 Double action	压侧 Push side	122.72	122.72	245.44	368.16	490.88	613.60	736.32	859.04	981.76	1104.48
			拉侧 Pull side	114.68	114.68	229.36	344.04	458.72	573.40	688.08	802.76	917.44	1032.12
160	40	复动型 Double action	压侧 Push side	201.06	201.06	402.12	603.18	804.24	1005.30	1206.36	1407.42	1608.48	1809.54
			拉侧 Pull side	188.49	188.49	376.98	565.47	753.96	942.45	1130.94	1319.43	1507.92	1696.41
200	40	复动型 Double action	压侧 Push side	314.16	314.16	628.32	942.48	1256.64	1570.80	1884.96	2199.12	2513.28	2827.44
			拉侧 Pull side	301.57	301.57	60314	904.71	1206.28	1507.85	1809.42	2110.99	2412.56	2714.13

技术资料/Technical data

气缸理论出力计算方法/Formula for cylinder output power

$$F = P \times A$$

- A：活塞受压面积/Piston pressed area (cm^2)
- P：工作压力/Working pressure (Kgf/cm^2)
- F：气缸理论出力/The output power of cylinder (Kgf)

规 格/Specification

内径/Bore (mm)	32	40	50	63	80	100	125	160	200
动作型式/Action type	复动型/Double action								
工作介质/Work medium	空 气/Filtered air								
固定型式/Mounting type	基本型 FA型 FB型 CA型 CB型 LB型 TC型 TC-M型								
使用压力范围/Operation pressure range(Kgf/cm^2)	1～9.0								
保证耐压力/Proof pressure(Kgf/cm^2)	13.5								
使用温度范围/Available temperature ℃	-5～70								
使用速度范围/Operation speed (mm/s)	50～800								
缓冲型式/Cushioning	可调缓冲/Adjustable cushioning								
缓冲行程/Cushioning travel (mm)	24					32			
接管口径/Port size	PT1/8	PT1/4		PT3/8		PT1/2		PT3/4	

行 程/Travel

内径/Bore(mm)	标准行程/Standard travel	最大行程/Max travel	容许行程/Available travel
32	25 50 75 100 125 150 175 200 250 300 350 400 450 500	1000	2000
40	25 50 75 100 125 150 175 200 250 300 350 400 450 500 600 700 800	1200	2000
50	25 50 75 100 125 150 175 200 250 300 350 400 450 500 600 700 800 900 1000	1200	2000
63	25 50 75 100 125 150 175 200 250 300 350 400 450 500 600 700 800 900 1000	1500	2000
80	25 50 75 100 125 150 175 200 250 300 350 400 450 500 600 700 800 900 1000	1500	2000
100	25 50 75 100 125 150 175 200 250 300 350 400 450 500 600 700 800 900 1000	1500	2000
125	25 50 75 100 125 150 175 200 250 300 350 400 450 500 600 700 800 900 1000	1500	2000
160	25 50 75 100 125 150 175 200 250 300 350 400 450 500 600 700 800 900 1000	1500	2000
200	25 50 75 100 125 150 175 200 250 300 350 400 450 500 600 700 800 900 1000	1500	2000

※ 特殊行程请与本公司联系/Special travel should checked with our factory

标准气缸MB系列
STANDARD CYLINDER MB SERIES

BANGYE

产品特性/Product features

免润滑/Free of lubrication

采用含油轴承，使活塞杆无需加油润滑。
Oil bearing is adopted so the piston rod do not need to be lubricated.

缓冲性/Cushion

除带固定缓冲外，气缸终端还带可调缓冲，
使气缸换向时平稳无冲击。
Besides fixed buffer,the cylinder terminal has adjustable cushion screw,so that the cylinder enters into stably without impact during commute direction .

耐高温性/High temperature available

可采用耐高温密封材料，使气缸在150摄氏度
高温条件下正常工作(客户需向本公司订作)。
Adopted of special sealing material ,the cylinder can work normally at 150 degree (user should order it from us).

安装型式多样/Various mounting type

多种安装附件供客户选择。
Various mounting accessories are supplied.

附磁性/Magnetic property

气缸活塞上装有一个永久磁铁，它可触发安装
在气缸上的磁性开关来感测气缸的运动位置。
The cylinder piston is equipped with a permanent magnet that can trigger the magnetic switch of the cylinder to detect the moving position of cylinder.



符 号/Symbol



内部结构及主要零件材质/Inner structure and material list for main parts

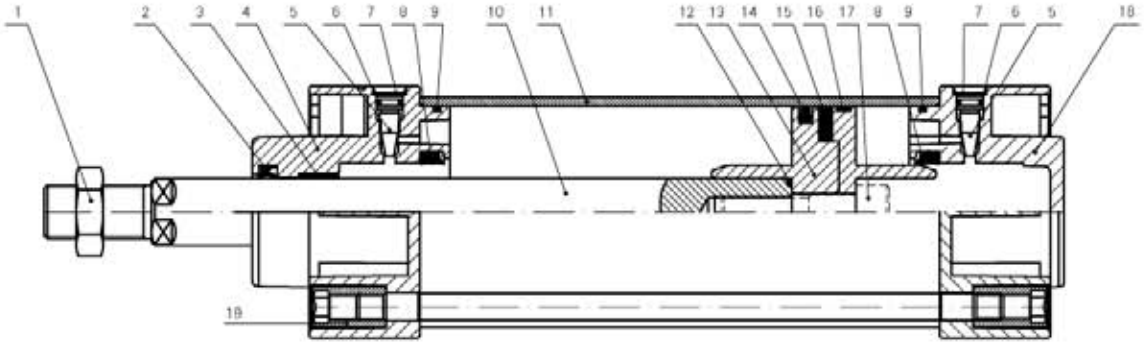

序号/No	名称/Name	材质/Material	序号/No	名称/Name	材质/Material
1	活塞杆螺帽 / Nut for piston rod	碳钢 / Carbon steel	11	缸筒 / Tube	铝合金/Aluminium alloy
2	防尘圈 / Anti dust seals	NBR	12	活塞杆O型圈 / O-ring for piston rod	NBR
3	含油轴承 / Oil bearing	铜基粉末合金 / Sintered bronze	13	活塞 / Piston	铝合金/Aluminium alloy
4	前端盖 / Front cover	铝合金/Aluminium alloy	14	活塞圈 / Piston ring	NBR
5	针阀 / Air cushioning screw	黄铜 / H59 brass	15	磁环 / Magnet	铁氧体 / Ferrite
6	针阀O型圈 / O-ring for air cushioning screw	NBR	16	导向带 / Wearing ring	POM
7	针阀卡环 / Anti for air cushion hole screw	弹簧钢 / Spring steel	17	活塞固定螺丝 / Piston fixing screw	碳钢 / Carbon steel
8	缓冲圈 / Cushioning seals	NBR	18	后端盖/Back cover	铝合金/Aluminium alloy
9	管壁O型圈 / O-ring for front cover	NBR	19	支拉螺帽/Tie-rod nut	碳钢 / Carbon steel
10	活塞杆 / Piston rod	碳钢 / Carbon steel			

标准气缸MB系列
STANDARD CYLINDER MB SERIES

BANGYE®

订购码/Ordering code

MB — 50 X 50 — S — LB

- MB：型号/Symbol
- 50：缸径/Bore
- 50：行程/Travel
- S：磁石代号/Magnet code
- LB：固定型式/Mounting type

MB：标准复动型(拉杆式)
MB：Standard double action cylinder(cylinder with tie rod)
MBU：标准复动型(无拉杆式)
MBU：Standard double action cylinder(cylinder without tie rod)

S：附磁石
S：With magnet
空白：不附磁
Blank：without magnet

固定型式/Mounting type

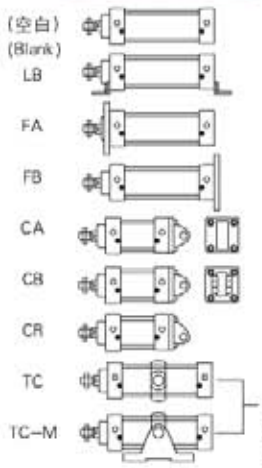

举例/Sample

1）欲订购缸径为50mm，行程为50mm，附磁，采用TC固定型式的标准复动型气缸，其正确的订购代号为：MB-50x50-S-TC

1）If user needs bore 50mm and 50mm travel with magnet,TC fixed type standard double action cylinder, the correct order code is : MB-50X50-S-TC.

2）欲订购缸径为63mm，行程为80mm，附磁，采用LB固定型式的标准复动型气缸，其正确的订购代号为：MB-63x80-S-LB

2）If user needs bore 63mm and 80mm travel with magnet,LB fixed type standard double action cylinder, the correct order code is : MB-63x80-S-LB.

基本尺寸/Basic specification

Φ32～Φ200

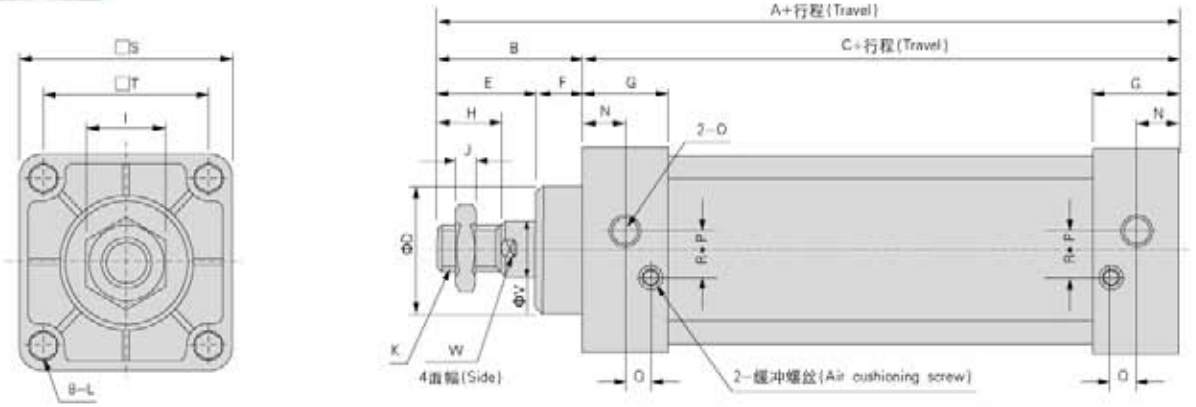

内径/符号(Bore/Symbol)	A	B	C	D	E	F	G	H	I	J	K	L
32	131	47	84	30	34	13	27	22	17	6	M10 x 1.25	M6
40	135	51	84	35	38	13	27	27	19	7	M14 x 1.5	M6
50	152	58	94	40	44	14	31.5	32	24	8	M18 x 1.5	M8
63	152	58	94	45	44	14	31.5	32	24	8	M18 x 1.5	M8
80	186	72	114	45	52	20	38	37	30	10	M22 x1.5	M10
100	186	72	114	55	52	20	38	37	30	10	M26 x1.5	M10
125	235	99	136	60	74	25	40	54	41	13.5	M27 x2	M12
160	312	132	180	65	94	38	50	72	55	18	M36X2	M16
200	347	167	180	75	100	67	50	72	55	18	M36X2	M16

内径/符号(Bore/Symbol)	N	O	P	Q	R	S	T	V	W
32	13	G1/8	4	6.7	6.5	46	32.5	12	10
40	14	G1/4	4	7	9	52	38	16	13
50	15.5	G1/4	5	8.7	10.5	65	46.5	20	17
63	15.5	G3/8	9	8.8	12	75	56.5	20	17
80	19	G3/8	11.5	11.5	14	95	72	25	22
100	19	G1/2	17	10	15	114	89	30	22
125	23	G1/2	14	12	14	140	110	32	27
160	25	G3/4	15	12	20	180	140	40	36
200	25	G3/4	15	12	20	200	175	40	36

MBD系列/MBD SERIES

订购码/Ordering code

MBD —— 50 X 50 —— S —— LB

- MBD：型 号/Symbol
- 50：缸 径/Bore
- 50：行 程/Travel
- S：磁石代号 Magnet code
- LB：固定型式/Mounting type

MBD：双轴复动型(拉杆式)
MBD,Two rod double action(cylinder with tie rod)
MBUD：双轴复动型(无拉杆式)
MBUD,Two rod double action(cylinder without tie rod)

S：附磁石
S,with magnet
空白：不附磁
Blank,without magnet

(空白) (Blank)
LB
FA
TC
TC-M
适用于 Available Φ40～Φ200

举例/Sample

1)欲订购缸径为50mm，行程为50mm，附磁，采用TC固定型式的双轴复动型气缸，其正确的订购代号为：MBD-50x50-S-TC

1)If user needs bore 50mm and 50mm travel with magnet, TC fixed type two piston rod standard double action cylinder, the correct order code is: MBD-50x50-S-TC

2)欲订购缸径为63mm，行程为80mm，附磁，采用LB固定型式的双轴复动型气缸，其正确的订购代号为：MBD-63x80-S-LB

2)If user needs bore 63mm and 80mm travel with magnet, LB fixed type two rod double action cylinder, thecorrect order code is: MBD-63x80-S-LB

基本尺寸/Basic specification

Φ32～Φ200

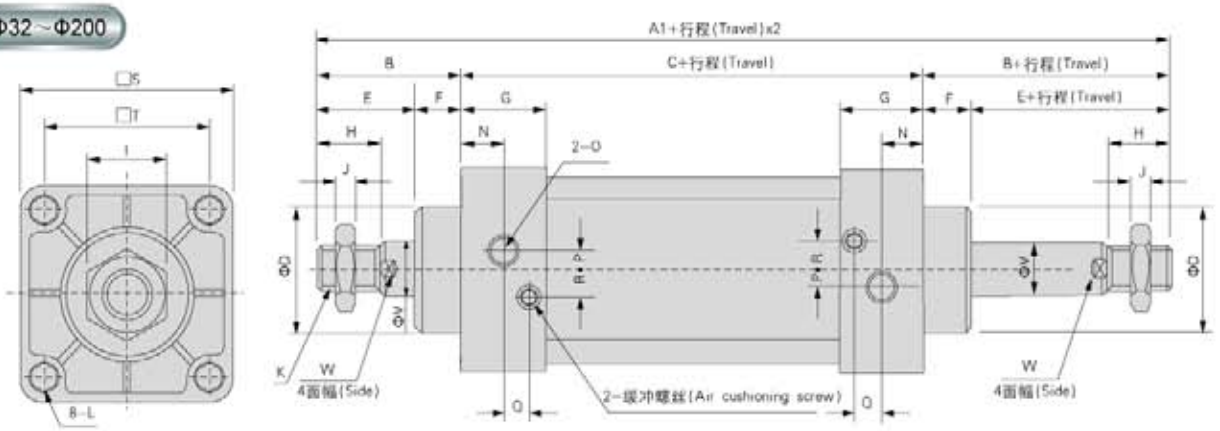

内径/符号(Bore/Symbol)	A1	B	C	D	E	F	G	H	I	J	K	L
32	178	47	84	30	34	13	27	22	17	6	M10 x 1.25	M6
40	186	51	84	35	38	13	27	27	19	7	M14 x 1.5	M6
50	210	58	94	40	44	14	31.5	32	24	8	M18 x 1.5	M6
63	210	58	94	45	44	14	31.5	32	24	8	M18 x 1.5	M8
80	258	72	114	45	52	20	38	37	30	10	M22 x1.5	M10
100	258	72	114	55	52	20	38	37	30	10	M26 x1.5	M10
125	334	99	136	60	74	25	40	54	41	13.5	M27 x2	M12
160	444	132	180	65	94	38	50	72	55	18	M36x2	M16
200	514	167	180	75	100	67	50	72	55	18	M36x2	M16

内径/符号(Bore/Symbol)	N	O	P	Q	R	S	T	V	W
32	13.5	G1/8	4	6.7	6.5	46	32.5	12	10
40	13.5	G1/4	4	7	9	52	38	16	13
50	15.5	G1/4	5	8.7	10.5	65	46.5	20	17
63	15.5	G3/8	9	8.8	12	75	56.5	20	17
80	19	G3/8	11.5	11.5	14	95	72	25	22
100	19	G1/2	17	10	15	114	89	30	22
125	23	G1/2	14	12	14	140	110	32	27
160	25	G3/4	15	12	20	180	140	40	36
200	25	G3/4	15	12	20	220	175	40	36

MBJ系列/MBJ SERIES

订购码/Ordering code

MBJ —— 50 X 50 —— 25 —— S —— LB

- MBJ：型号/Symbol
- 50：缸径/Bore
- 50：行程/Travel
- 25：调整行程 Adjustable travel
- S：磁石代号 Magnet code
- LB：固定型式/Mounting type

MBJ：双轴复动可调型(拉杆式)
MBJ：two rod double action and adjustable(cylinder with tie rod)
MBJJ：双轴复动可调型(无拉杆式)
MBJJ：two rod double action and adjustable(cylinder without tie rod)

25：25mm
50：50mm
75：75mm

S：附磁石
S：with magnet
空白：不附磁
Blank：without magnet

(空白) (Blank)
LB
FA
TC
TC-M
适用于 available Φ40～Φ200

举例/Sample

1）欲订购缸径为80mm，行程为250mm，调整行程为25mm，附磁，采用LB固定型式的双轴复动可调型(拉杆式)气缸，其正确的订购代号为：MBJ-80x250-25-S-LB / 1) If user needs bore 80mm and 250mm travel with magnet, adjustable travel is 25mm, LB fixed type two rod double action cylinder (with tie-rod), the correct order code is: MBJ-80x250-25-S-LB

2）欲订购缸径为40mm，行程为100mm，调整行程为25mm，不附磁，采用FA固定型式的双轴复动可调型(拉杆式)气缸，其正确的订购代号为：MBJ-40x100-25-FA / 2) If user needs bore 40mm and 100mm travel without magnet, adjustable travel is 25mm, FA fixed type two rod doubleaction cylinder(with tie-rod), the correct order code is: MBJ-40x100-25-FA

基本尺寸/Basic specification

Φ32～Φ200

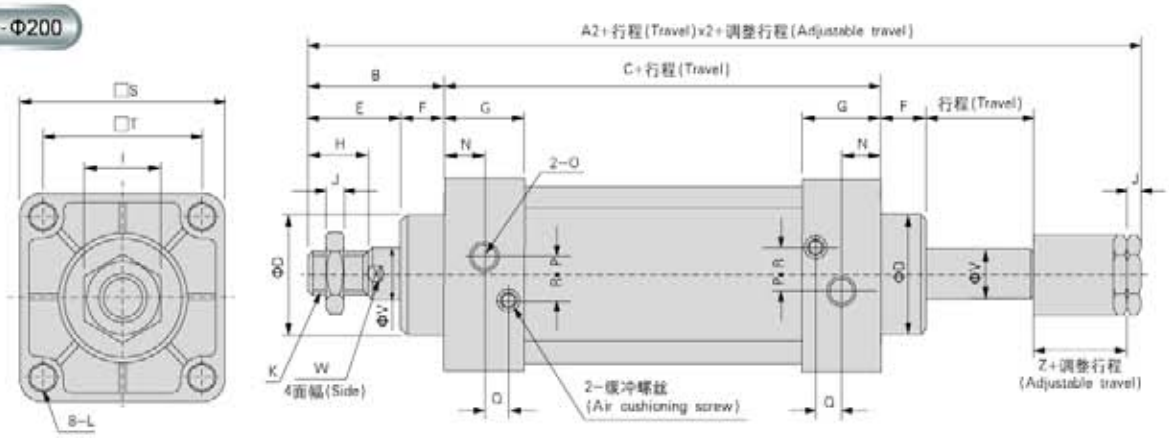

内径/符号(Bore/Symbol)	A2	B	C	D	E	F	G	H	I	J	K	L
32	171	47	84	30	34	13	27	22	17	6	M10 x 1.25	M6
40	176	51	84	35	38	13	27	27	19	7	M14 x 1.5	M6
50	197	58	94	40	44	14	31.5	32	24	8	M18 x 1.5	M6
63	197	58	94	45	44	14	31.5	32	24	8	M18 x 1.5	M8
80	245	72	114	45	52	20	38	37	30	10	M22 x 1.5	M10
100	245	72	114	55	52	20	38	37	30	10	M26 x 1.5	M10
125	308.5	99	136	60	74	25	40	54	41	13.5	M27 x 2	M12
160	436	132	180	65	94	38	50	72	55	18	M36X2	M16
200	500	167	180	75	100	67	50	72	55	18	M36X2	M16

内径/符号(Bore/Symbol)	N	O	P	Q	R	S	T	V	W	Z
32	13.5	G1/8	4	6.7	6.5	46	32.5	12	10	21
40	13.5	G1/4	4	7	9	52	38	16	13	21
50	15.5	G1/4	5	8.7	10.5	65	46.5	20	17	23
63	15.5	G3/8	8	8.8	12	75	56.5	20	17	23
80	19	G3/8	11.5	11.5	14	95	72	25	22	29
100	19	G1/2	17	10	15	114	89	30	22	29
125	23	G1/2	14	12	14	140	110	32	27	35
160	25	G3/4	15	12	20	180	140	40	36	68
200	25	G3/4	15	12	20	220	175	40	36	68

安装附件/Mounting kits

LB型尺寸/LB Size

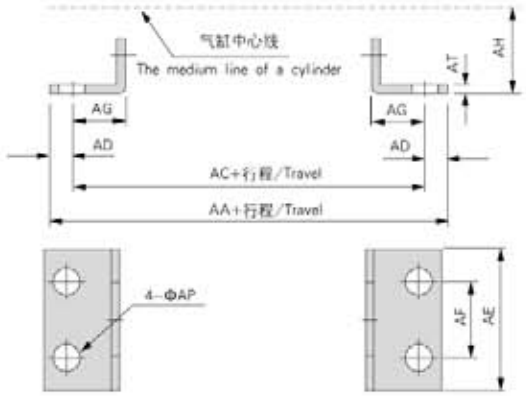

符号/内径(Symbol/Bore)	32	40	50	63	80	100	125	160	200
AA	146	154	170	176	202	210	290	340	380
AC	128	132	148	148	174	178	250	300	320
AD	9	11	11	14	14	16	20	20	30
AE	50	55	70	80	100	120	140	180	220
AF	32	38	46	56	72	89	90	115	135
AG	22	24	27	27	30	32	45	60	70
AH	30	33	40	45	55	65	90	115	135
AP	7	9	9	12	12	14	16	18	22
AT	3.2	3.2	3.2	3.6	4.5	4.5	8	8	9

FA型尺寸/FA Size

FB型尺寸/FB Size

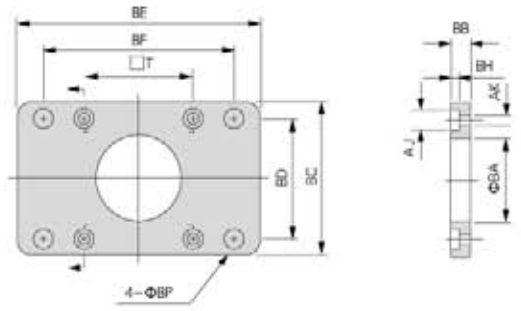

符号/内径(Symbol/Bore)	32	40	50	63	80	100	125	160	200
AJ	11	11	14	14	17.5	17.5	19	25	25
AK	7	7	7	9	10.5	10.5	13	17	17
BA	31	36	41	46	46	56	61	66	76
BB	10	10	12	12	16	16	20	20	25
BC	50	55	70	80	100	120	140	180	220
BD	32	36	45	50	63	75	110	115	135
BE	79	90	110	120	153	178	224	280	320
BF	64	72	90	100	126	150	180	230	270
BH	6.5	6.5	8.5	8.5	10.5	10.5	12.5	17	17
BP	7	9	9	9	12	14	16	18	22
T□	32.5	38	46.5	56.5	72	89	110	140	175

CA型尺寸/CA Size

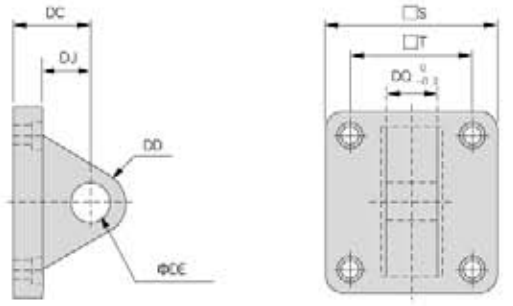

符号/内径(Symbol/Bore)	32	40	50	63	80	100	125	160	200
S	46	52	65	75	95	114	140	180	220
T	32.5	38	46.5	56.5	72	89	110	140	175
DC	23	23	30	30	42	42	50	55	60
DD	10	11	15	15	23	23	25	25	25
DE	10	10	14	14	22	22	25	30	30
DJ	13	13	17	17	26	26	33	35	35
DD	14	14	20	20	30	30	69.7	90	90

安装附件/Mounting kits

CB型尺寸/CB Size

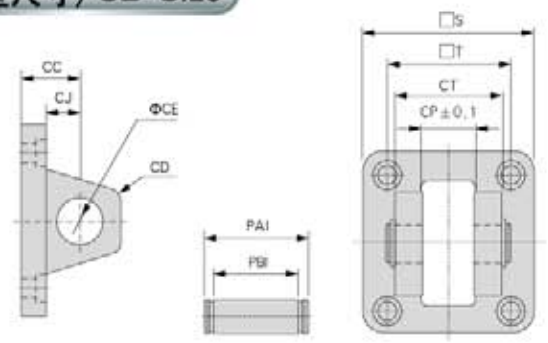

符号/内径 (Symbol/Bore)	32	40	50	63	80	100	125	160	200
CC	23	23	30	130	42	42	50	55	60
CD	10	11	15	15	23	23	8	30	30
CE	10	10	14	14	22	22	25	30	30
CJ	13	13	17	17	26	26	31	35	35
CP	14	14	20	20	30	30	70	90	90
CT	28	28	40	40	60	60	130	170	170
PAI	35	36	48	48	69	69	139	181	181
PBI	29	29	41	41	61	61	131	170.5	170.5
S	46	52	65	75	95	114	140	180	220
T	32.5	38	46.5	56.5	72	89	110	140	175

TC型尺寸/TC Size

MB系列用/Used for MB series

MBU系列用/Used for MBU series

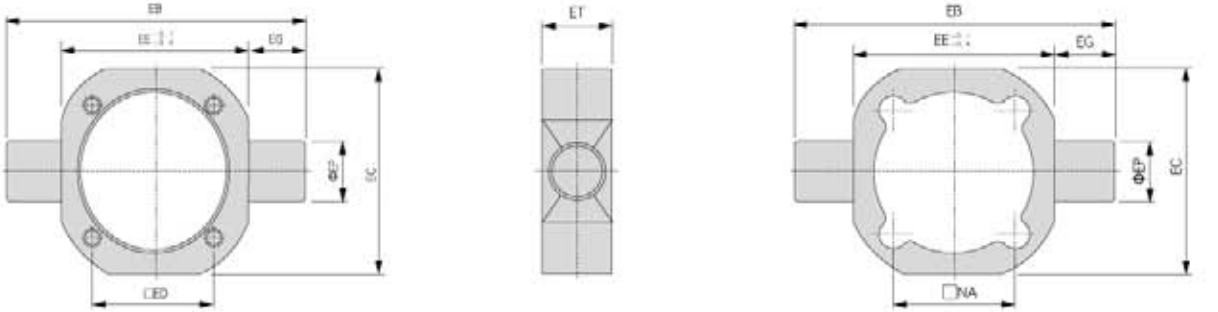

符号/内径(Symbol/Bore)	32	40	50	63	80	100	125	160	200
EB	74	95	107	130	150	182	210	264	314
EC	49	58	71	87	110	136	163	179	218
ED	32.5	38	46.5	56.5	72	89	110	140	175
EE	50	63	75	90	110	132	160	200	250
EG	12	17	17	20	20	25	25	32	32
EP	12	16	16	20	20	25	25	32	32
ET	17	22	22	28	34	40	45	56	64

TC-M型/Type

MBU系列用/Used for MBU series

TC-M系列用/Used for TC-M series

MB系列用/Used for MB series

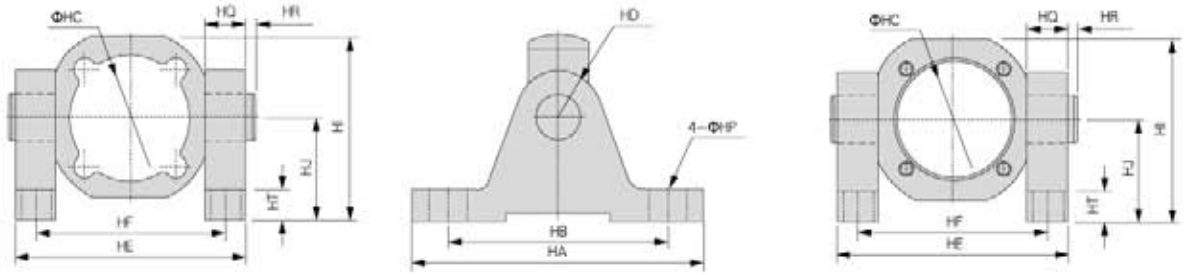

符号/内径 (Symbol/Bore)	32	40	50	63	80	100	125	160	200
HA	63	80	80	100	100	120	145	190	200
HB	45	60	60	70	70	90	105	140	150
HD	12	16	16	20	20	25	25	32	32
HE	74	96	107	130	150	180	210	267	317
HF	62	79	91	110	130	155	185	232	282
HI	60	74	80	103	115	143	166	215	262

符号/内径 (Symbol/Bore)	32	40	50	63	80	100	125	160	200
HJ	35	45	45	60	60	75	85	110	135
HQ	12	17	17	20	20	25	25	32	32
HR	0	1	1	1	1	1	1	2	2
HT	10	12	12	14	14	17	25	24	27
HP	7	9	9	11	11	14	18	22	22

联接附件/Connector kits

接头尺寸/Joint size

Y接头/Y Joint

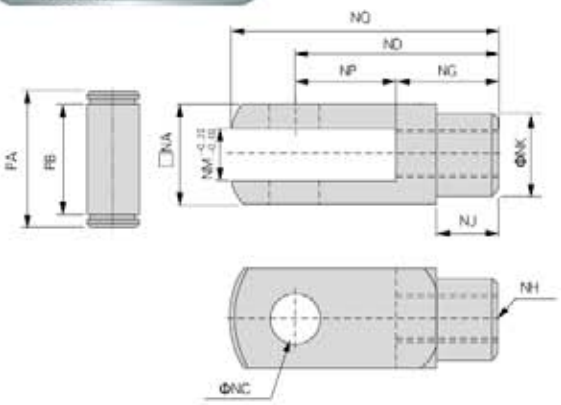

I 接头/I Joint

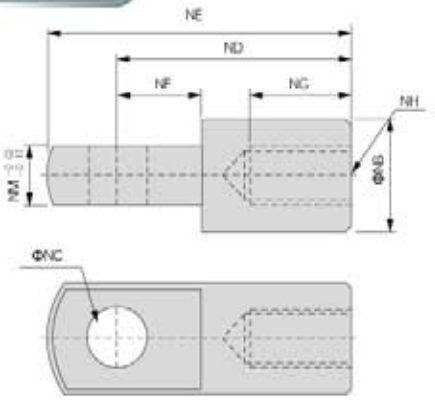

内径/符号(Bore/Symbol)	NA	NB	NC	ND	NE	NF	NG	NH	NJ	NK	NM	NP	NQ	PA	PB
32	28	20	10	30	40	16	14	M10X1.25	12	20	14	16	42	35	29
40	28	22	10	40	50	19	19	M14X1.5	15	22	14	19	59	35	29
50	40	28	14	50	64	24	24	M18X1.5	18	28	20	24	74	47	41
63	40	28	14	50	64	24	24	M18X1.5	18	28	20	24	74	47	41
80	60	40	22	65	80	34	26	M22X1.5	18	40	30	34	94	69	61
100	60	40	22	65	80	34	26	M26X1.5	18	40	30	34	94	69	61
125	55	55	30	110	155	50	56	M27X2.0	15	55	30	54	148	64	56
160	78	60	35	144	188	72	72	M36X2	50	60	35	75	188	83	78
200	78	60	35	144	188	72	72	M36X2	50	60	35	75	188	83	78

浮动接头/Self-aligning Bearings

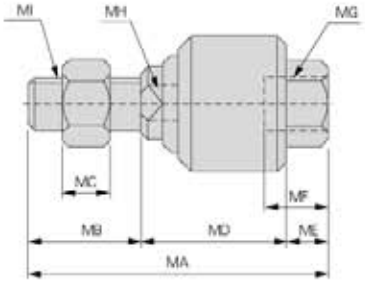

内径/符号(Bore/Symbol)	MA	MB	MC	MD	ME	MF	MG	MH	MI
32	73	20	6	45	8	26	M10X1.25	12	M10X1.25
40	77	24	7	46	7	26	M14X1.5	12	M12X1.5
50	106	32	8	62	12	34	M18X1.5	19	M16X1.5
63	106	32	8	62	12	34	M18X1.5	19	M16X1.5
80	122	40	10	68	14	42	M22X1.5	19	M20X1.5
100	122	40	10	68	14	42	M26X1.5	19	M20X1.5
125	147	54	13.5	77	16	40	M27X2.0	24	M27X2.0

鱼眼接头/Ball joint ends

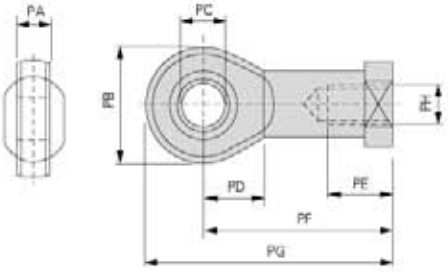

内径/符号(Bore/Symbol)	PA	PB	PC	PD	PE	PF	PG	PH
32	14	28	10	15	20	43	57	M10X1.25
40	16	32	12	17	22	50	66	M14X1.5
50	21	42	16	22	28	64	85	M18X1.5
63	21	42	16	22	28	64	85	M18X1.5
80	25	50	20	26	33	77	102	M22X1.5
100	25	50	20	26	33	77	102	M26X1.5
125	37	70	30	36	51	110	145	M27X2.0

感应开关/Sensor switch



相关尺寸/Specification

CS1-F

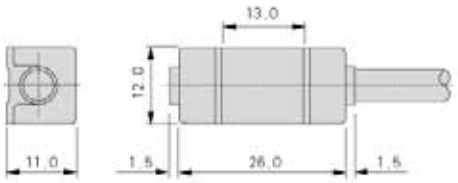

CS1-U

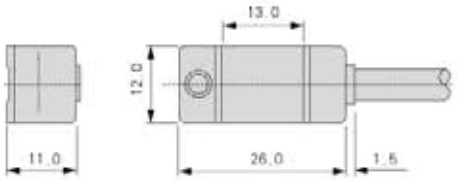

接线图/Wiring diagram

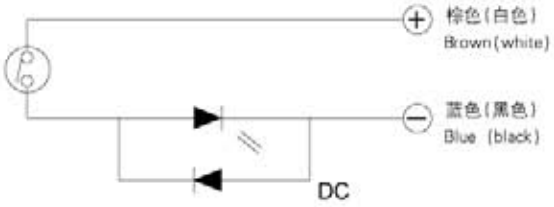

规　格/Specification

感应开关型式 Model	使用电压范围 Available voltage	使用电流范围 Available current	反应时间 Reflect time	抗冲击性 Anti concussion	耐震程度 Seismic degree	使用温度范围 Available temperature	保护等级 Protect rate	指示灯 Light	电线长度 Wire length	寿命 Life time
CS1-F CS1-U	DC:5V～240V AC:5V～380V	DC:5～60mA AC:5～50mA	最大1ms MAX 1ms	300m/S² (30G)	10～55Hz	0～60℃	IP-67	LED	2M	至少500万次 At least 5 million times

订购码/Ordering code

CS1 —— U

CS1 型号/Model

CS1 气缸用磁性开关
CS1 Sensor switch

U 型式/Type

F:向前型/Front type
U:向上型/Up type

IH 型号/Model

IH:标准气缸感应开关固定座
Standard cylinder sensor install bracket

40 气缸内径/Bore

32:32mm
40:40mm
50:50mm
63:63mm
80:80mm
100:100mm
125:125mm

举例/sample

1) 欲订购与MB标准气缸配套，型式为向上型的磁感应开关，其正确的订购码代号为：CS1-U。
1) If user need upside magnet sensor switch which used for MB standard cylinder the correct ordering code is CS1-U.

2) 欲订购与缸径为63mm的MB标准气缸配套的磁感应开关固定座，其正确的订购码代号为：IH-63。
2) If user need magnet sensor switch install bracket which used for bore 63mm MB standard cylinder the correct code is UH-63.

安装与使用/Install&use

- 工作中负载有变化，应选用输出力充裕的气缸，在高温条件下，应选用相应的耐高温气缸。
  The load would be changed during working process,so the cylinder with enough output force should be chosen ,on the case of high temperature , operator is suggested to choose the cylinder with high-temp seals!

- 气缸配管前，必须清除管道内的杂物，防止杂物进入气缸内。
  Before put in the air tube on the cylinder ,the inside surface of the pipe must be cleaned .In order to prevent sundries from entering into cylinder.

- 气缸使用介质应经过40μm以上滤芯过滤后方可使用。
  The medium used by cylinder can not be put into use until it has pass filtering by certain filtering element above 40um.

- 在低温环境下，应采取抗冻措施，防止系统的水分结冰。
  Under condition of low temperature ,the anti-freezing measure must be adopted ,so as to avoid freezing of engineering system.

- 气缸在工作过程中应尽可能避免受侧向负载，以维持气缸的正常工作和使用寿命。
  During the working process ,the cylinder should be avoid side-load,in order to maintain normal working and assure the lifetime of the cylinder.

- 气缸拆下长时间不使用，要注意表面防锈，进排气口应加防尘堵塞帽。
  If the cylinder has been out of work for a long time ,operator should take notice of surface rustproof,the dust proof cap is suggested to be added at air in and out hole .

气缸理论出力计算方法/Formula for cylinder output power

$$F = P \times A$$

- A：活塞受压面积/Piston pressed area (cm^2)
- P：工作压力/Working pressure (Kgf/cm^2)
- F：气缸理论出力/The output power of cylinder (Kgf)

MI、MSI、MTI、MIC系列/SERIES

订购码/Ordering code

MI — 20 X 50 — U — S — LB

- MI 系列代号/Magnet code
  - MI：复动型/Double action
  - MSI：单动押出型 Singleaction(rear spring)
  - MTI：单动引入型 Single action(front spring)
  - MIC：复动可调缓冲型 MIC：Double action with adjustable air cushioning
- 20 缸 径/Bore
- 50 行 程/Travel
- U 后盖型式/Back cap type
  - CA：摆尾型/Swing back cap
  - CM：圆尾型/Round back cap
  - R：轴向进气型/Axial air connection
  - U：径向进气型/Lateral air connection
- S 行 程/Travel
  - 空白：不附磁 Blank：Without magnet
  - S：附磁石 S：With magnet
- LB 固定型式/Mounting type

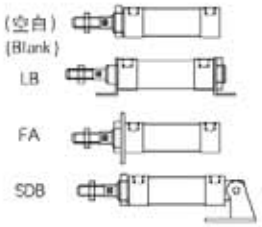

举例/Sample

1) 欲订购缸径为20mm，行程为50mm，后盖型式为摆尾型式，采用SDB型固定方式，标准复动型不锈钢迷你气缸，其正确的订购码代号为：MI-20X50-SDB。

1) If user need bore 20mm and 50mm travel SDB mounting type,standard double action stainless steel mini cylinder,the correct order code is：MI-20X50-SDB.

2) 欲订购缸径为32mm，行程为50mm，后盖型式为平尾型的基本单动押出型不锈钢迷你气缸，其正确的订购码代号为：MSI-32X50-U。

2) If user need bore 32mm and 50mm travel,flat end cap,single action(rear spring)type stainless steel mini cylinder,the correct order code is：MSI-32X50-U.

气缸理论出力表/Table for theoretic power of a cylinder

气缸内径/Cylinder ID		8			10			12			16			20			25	
活塞杆外径/Out diameter of piston rod		4			4			6			6			8			10	
动作方式 Action type		押出单动 Single action(rear spring)	复动型/Double action		押出单动 Single action(rear spring)	复动型/Double action		押出单动 Single action(rear spring)	复动型/Double action		押出单动 Single action(rear spring)	复动型/Double action		押出单动 Single action(rear spring)	复动型/Double action		复动型/Double action	
			压侧 Push side	拉侧 Pull side		压侧 Push side	拉侧 Pull side		压侧 Push side	拉侧 Pull side		压侧 Push side	拉侧 Pull side		压侧 Push side	拉侧 Pull side	压侧 Push side	拉侧 Pull side
受压面积 Pressure area(cm^2)		0.50	0.50	0.37	0.79	0.79	0.66	1.13	1.13	0.85	2.01	2.01	1.81	3.14	2.64	4.90	4.90	4.12
空气压力 Air pressure (Kgf/cm^2)	1	–	0.50	0.37	–	0.79	0.66	–	1.13	0.85	–	2.01	1.81	3.14	2.64	–	4.90	4.12
	2	–	1.00	0.74	–	1.58	1.32	–	2.26	1.70	–	4.02	3.62	6.28	5.28	2.45	9.80	8.24
	3	0.50	1.50	1.11	0.79	2.37	1.98	1.13	3.39	2.55	2.01	6.03	5.43	9.42	7.92	7.35	14.70	12.36
	4	1.00	2.00	1.48	1.58	3.16	2.64	2.26	4.52	3.40	4.02	8.04	7.24	12.56	10.56	12.25	19.60	16.48
	5	1.50	2.50	1.85	2.37	3.95	3.30	3.39	5.65	4.25	6.03	10.05	9.05	15.70	13.20	17.15	24.50	20.60
	6	2.00	3.00	2.22	3.16	4.74	3.96	4.52	6.78	5.10	8.04	12.06	10.86	18.84	15.84	22.05	29.40	24.72
	7	2.50	3.50	2.59	3.95	5.53	4.62	5.65	7.91	5.95	10.04	14.07	12.67	21.98	18.48	26.95	34.30	28.84
	8	–	–	–	–	–	–	–	–	–	–	–	–	25.12	21.12	31.85	39.20	32.96
	9	–	–	–	–	–	–	–	–	–	–	–	–	28.26	23.76	36.75	44.10	37.08

MI、MSI、MTI、MIC系列/SERIES

产品特性/Product features



免润滑/Free of lubrication

采用含油轴承，使活塞杆无需加油润滑。
Oil bearing is adopted so the piston rod do not need to be lubricated.

耐 久 性/Durable

气缸前后盖经过本色阳极氧化处理，不仅具有耐磨性、耐腐蚀性及耐久性，而且更显外观小巧、精美。
The surface treatment of end cap and cylinder body are anodize not only have abrasive resistance.corrosion resistance.durable ,but also very delicate and nice.

耐高温性/High temperature available

可采用耐高温密封材料，使气缸在150摄氏度高温条件下正常工作(客户需向本公司订作)。
Adopted of special sealing material ,the cylinder can work normally at 150 degree (user should order it from us).

安装型式多样/Various mounting type

多种安装附件供客户选择。
Various mounting accessories are supplied.

附磁性/Magnetic property

气缸活塞上装有一个永久磁铁，它可触发安装在气缸上的磁性开关来感测气缸的运动位置。
The cylinder piston is equipped with a permanent magnet that can trigger the magneticswitch of the cylinder to detect the moving position of cylinder.

规 格/Specification

内径/Bore (mm)	8	10	12	16	20	25
动作型式/Action type	复动型/Double action 单动押出型/Single action(rear spring) 单动引入型/Single action(front spring)					
工作介质/Work medium	空 气/Filtered air					
固定型式/Mounting type	基本型/Basic type FA LB SDB					
使用压力范围/Operation pressure range(Kgf/cm^2)	1～7.0					
保证耐压力/Proof pressure(Kgf/cm^2)	13.5					
使用温度范围/Available temperature ℃	-5～70					
使用速度范围/Operation speed (mm/s)	50～750					
缓冲型式/Cushioning	防撞垫片/Cushion mat					
接管口径/Port size	M5 x 0.8				PT1/8	

行 程/Travel

内径/Bore(mm)		标准行程 / Standard travel	最大行程/Max travel
复动型 Double action	8	10 15 20 25 30 40 50 60 75 80 100 125 150	150
	10	10 15 20 25 30 40 50 60 75 80 100 125 150 160 175 200	200
	12	10 15 20 25 30 40 50 60 75 80 100 125 150 160 175 200 250	250
	16	10 15 20 25 30 40 50 60 75 80 100 125 150 160 175 200 250 300	300
	20	10 15 20 25 30 40 50 60 75 80 100 125 150 160 175 200 250 300 350 400 450 500	500
	25	10 15 20 25 30 40 50 60 75 80 100 125 150 160 175 200 250 300 350 400 450 500	500
单动型 Single action	8 、10	10 15 20 25 30 40 50	50
	12～25	10 15 20 25 30 40 50 60 75	75

※ 特殊行程请与本公司联系/Special travel should checked with our factory.

内部结构及主要零件材质/Inner structure and material list for main parts

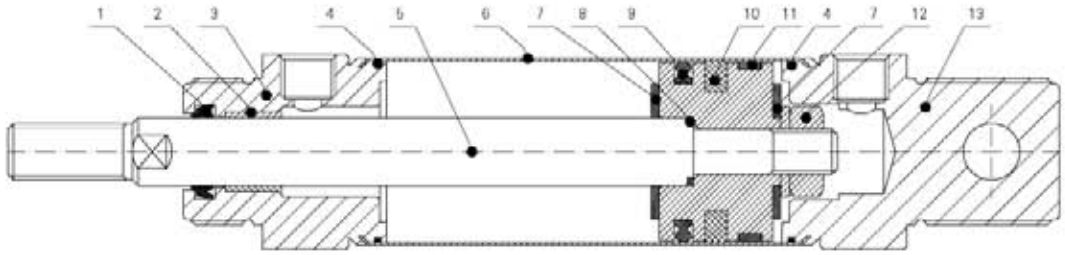

序号/No	名称/Name	材质/Material	序号/No	名称/Name	材质/Material
1	防尘圈/Anti dust seals	NBR	8	活塞杆O型圈/O-ring for piston rod	NBR
2	含油轴承/Oil bearing	铜基粉末合金/Sintered bronze	9	活塞圈/Piston ring	NBR
3	前端盖/Front cover	铝合金/Aluminium alloy	10	磁环/Magnet	铁氧体/Ferrite
4	管壁O型圈/O-ring for front cover	NBR	11	导向带/Wearing ring	POM
5	活塞杆/Piston rod	316不锈钢/Stainless steel	12	活塞固定螺帽/Nut for piston and piston rod fixed	碳钢/Carbon steel
6	缸筒/Tube	316不锈钢/Stainless steel	13	后端盖/Back cover	铝合金/Aluminium alloy
7	防撞垫片/Crash pad	NBR			

安装尺寸/Install dimension

CA型/Type

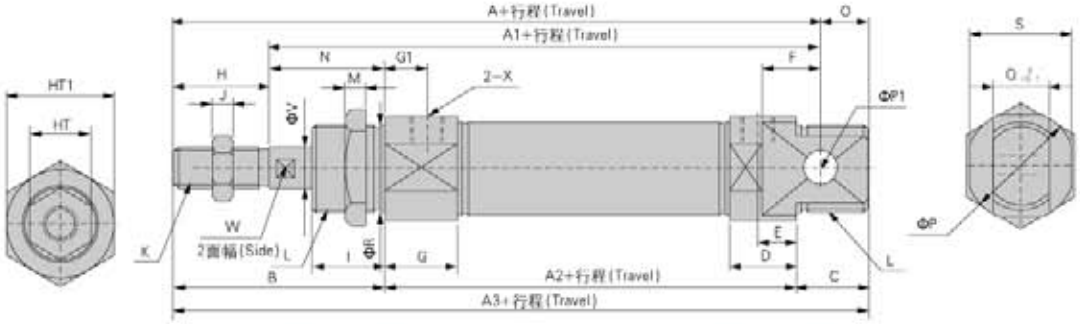

R 型/Type

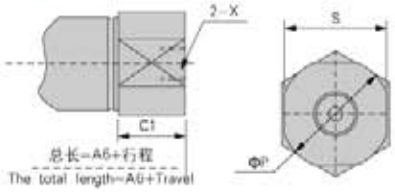

CM 型/Type

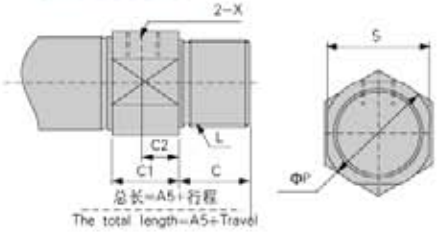

U 型/Type

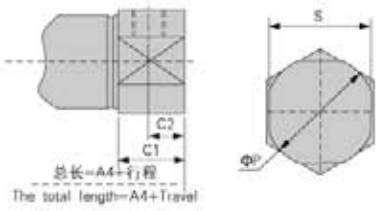

内径/符号(Bore/Symbol)	A	A1	A2	A3	A4	A5	A6	B	C	C1	C2	D	E	F	G	G1	H	I
8	76	64	46	86	74	–	–	28	12	9.5	5	9.5	5	6	10	5.5	12	12
10	76	64	46	86	73.5	–	–	28	12	9.5	5	9.5	5	6	10	5.5	12	12
12	91	75	50	105	88	–	–	38	17	10.5	6	10.5	6	9	12.5	8	16	17
16	98	82	56	111	94	111	94	38	17	10.5	6	10.5	6	9	12.5	8	16	17
20	115	95	62	126	106	126	106	44	20	15	8	15	8	12	15	8	20	20
25	126	104	65	137	115	137	115	50	22	15	8	15	8	12	15	8	22	22

内径/符号(Bore/Symbol)	J	K	L	M	N	O	P	P1	Q	R	S	T	T1	X	V	W
8	2.5	M4 x 0.7	M12 x 1.25	6	16	10	17	4	8	12	15	7	19	M5 x 0.8	4	–
10	2.5	M4 x 0.7	M12 x 1.25	6	16	10	17	4	8	12	15	7	19	M5 x 0.8	4	–
12	5	M6 x 1.0	M16 x 1.5	6	22	14	20	6	12	16	18	10	22	M5 x 0.8	6	5
16	5	M6 x 1.0	M16 x 1.5	6	22	13	22	6	12	16	20	10	22	M5 x 0.8	6	5
20	6	M8 x 1.25	M22 x 1.5	7	24	11	28	8	16	22	24	12	29	PT1/8	8	6
25	6	M10 x 1.25	M22 x 1.5	7	28	11	33.5	8	16	22	30	17	29	PT1/8	10	8

MSI系列/SERIES

安装尺寸/Install dimension

CA 型/Type

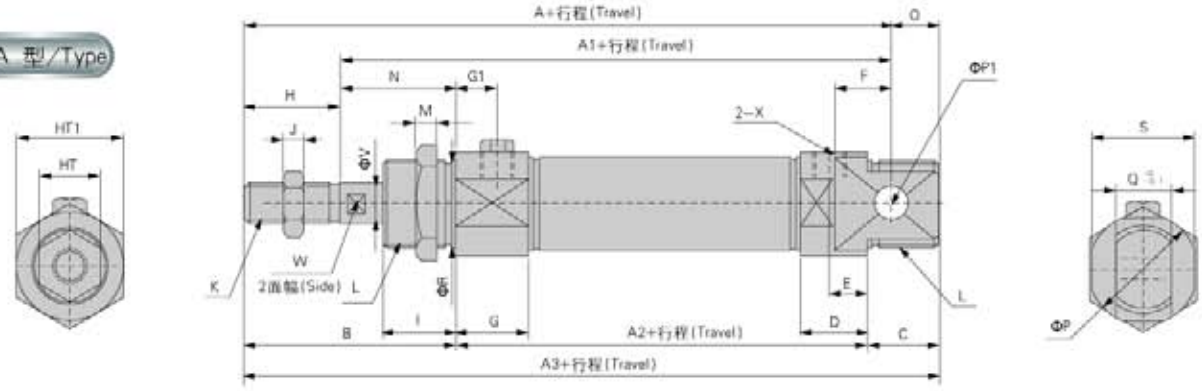

R 型/Type

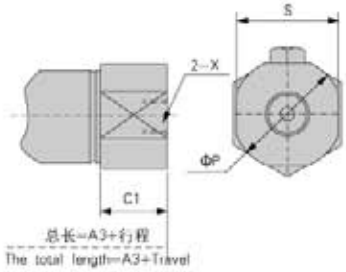

CM 型/Type

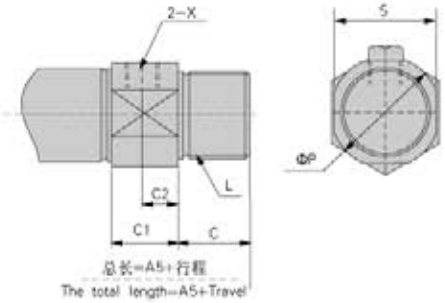

U 型/Type

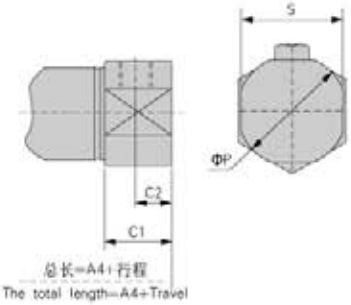

内径/符号(Bore/Symbol)	A			A1			A2			A3			A4		
行 程/Travel	0~50	51~100	101~150	0~50	51~100	101~150	0~50	51~100	101~150	0~50	51~100	101~150	0~50	51~100	101~150
8	101	–	–	89	–	–	71	–	–	111	–	–	99	–	–
10	101	–	–	89	–	–	71	–	–	111	–	–	99	–	–
12	116	–	–	100	–	–	75	–	–	130	–	–	113	–	–
16	123	148	–	107	132	–	81	106	–	136	161	–	119	144	–
20	140	165	190	120	145	170	87	112	137	151	176	201	131	156	181
25	151	176	201	120	154	179	90	115	140	162	187	212	140	165	190

内径/符号(Bore/Symbol)	A5			B	C	C1	C2	D	E	F	G	G1	H	I
行 程/Travel	0~50	51~100	101~150											
8	–	–	–	28	12	9.5	5	9.5	5	6	10	5.5	12	12
10	–	–	–	28	12	9.5	5	9.5	5	6	10	5.5	12	12
12	–	–	–	38	17	10.5	6	10.5	6	9	12.5	8	16	17
16	136	161	–	38	17	10.5	6	10.5	6	9	12.5	8	16	17
20	151	176	201	44	20	15	8	15	8	12	15	8	20	20
25	162	187	212	50	22	15	8	15	8	12	15	8	22	22

内径/符号(Bore/Symbol)	J	K	L	M	N	O	P	P1	Q	R	S	T	T1	X	V	W
8	2.5	M4 x 0.7	M12 x 1.25	6	16	10	17	4	8	12	15	7	19	M5 x 0.8	4	–
10	2.5	M4 x 0.7	M12 x 1.25	6	16	10	17	4	8	12	15	7	19	M5 x 0.8	4	–
12	5	M6 x 1.0	M16 x 1.5	6	22	14	20	6	12	16	18	10	22	M5 x 0.8	6	5
16	5	M8 x 1.0	M16 x 1.5	6	22	13	22	6	12	16	20	10	22	M5 x 0.8	6	5
20	6	M8 x 1.25	M22 x 1.5	7	24	11	28	8	16	22	24	12	29	PT1/8	8	6
25	6	M10 x 1.25	M22 x 1.5	7	28	11	33.5	8	16	22	30	17	29	PT1/8	10	8

MTI系列/SERIES

安装尺寸/Install dimension

CA 型/Type

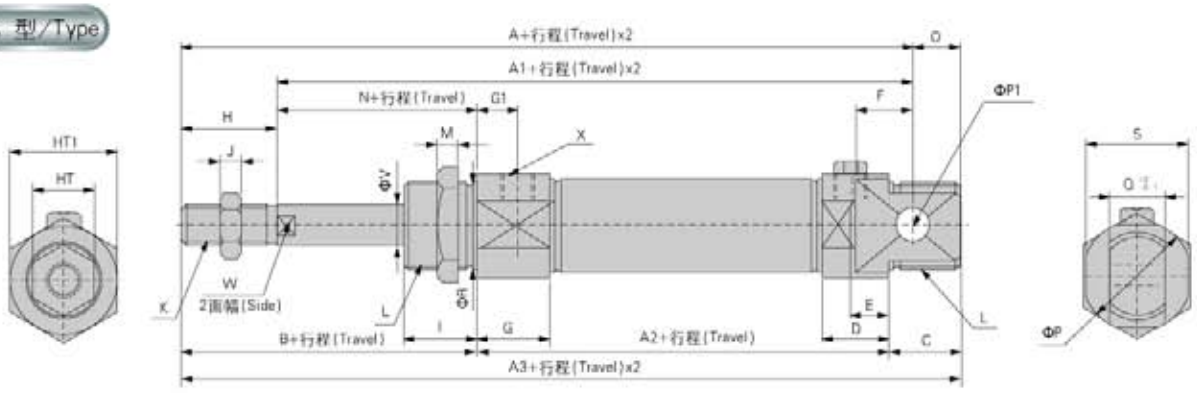

R 型/Type

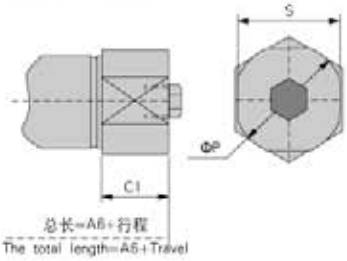

CM 型/Type

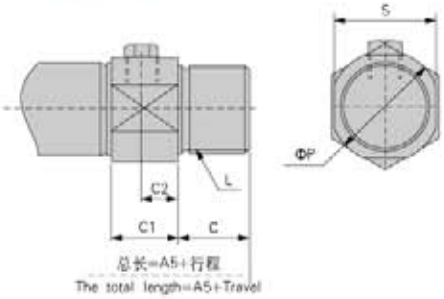

U 型/Type

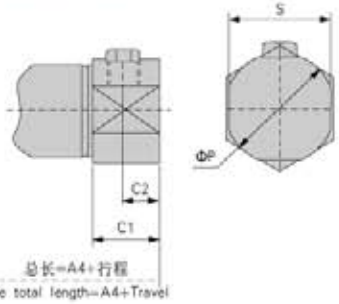

缸径/符号(Bore/Symbol)	A			A1			A2			A3			A4		
行 程/Travel	25	50	75	25	50	75	25	50	75	25	50	75	25	50	75
8	93	103	–	81	91	–	63	73	–	103	113	–	91	101	–
10	93	103	–	81	91	–	63	73	–	103	113	–	90.5	100.5	–
12	108	118	133	92	102	117	67	77	92	122	132	147	105	115	130
16	115	125	140	99	109	124	73	83	98	128	138	153	111	121	136
20	132	142	157	112	122	137	79	89	104	143	153	168	123	133	148
25	142	152	168	120	130	146	81	91	107	153	163	179	132	142	157

内径/符号(Bore/Symbol)	A5			A6			B	C	C1	C2	D	E	F	G	G1	H	I
行 程/Travel	0～50	51～100	101～150	0～50	51～100	101～150											
8	–	–	–	–	–	–	28	12	9.5	5	9.5	5	6	10	5.5	12	12
10	–	–	–	–	–	–	28	12	9.5	5	9.5	5	6	10	5.5	12	12
12	–	–	–	–	–	–	38	17	10.5	6	10.5	6	9	12.5	8	16	17
16	136	161	–	119	144	–	38	17	10.5	6	10.5	6	9	12.5	8	16	17
20	151	176	201	131	156	181	44	20	15	8	15	7.5	12	15	8	20	20
25	162	187	212	140	165	190	50	22	15	8	15	7.5	12	15	8	22	22

内径/符号(Bore/Symbol)	J	K	L	M	N	O	P	P1	Q	R	S	T	T1	X	V	W
8	2.5	M4 x 0.7	M12 x 1.25	6	16	10	17	4	8	12	15	7	19	M5 x 0.8	4	–
10	2.5	M4 x 0.7	M12 x 1.25	6	16	10	17	4	8	12	15	7	19	M5 x 0.8	4	–
12	5	M6 x 1.0	M16 x 1.5	6	22	14	20	6	12	16	18	10	22	M5 x 0.8	6	5
16	5	M6 x 1.0	M16 x 1.5	6	22	13	22	6	12	16	20	10	22	M5 x 0.8	6	5
20	6	M8 x 1.25	M22 x 1.5	7	24	11	28	8	16	22	24	12	29	PT1/8	8	6
25	6	M10 x 1.25	M22 x 1.5	7	28	11	33.5	8	16	22	30	17	29	PT1/8	10	8

MIC系列/SERIES

安装尺寸/Install dimension

CA 型/Type

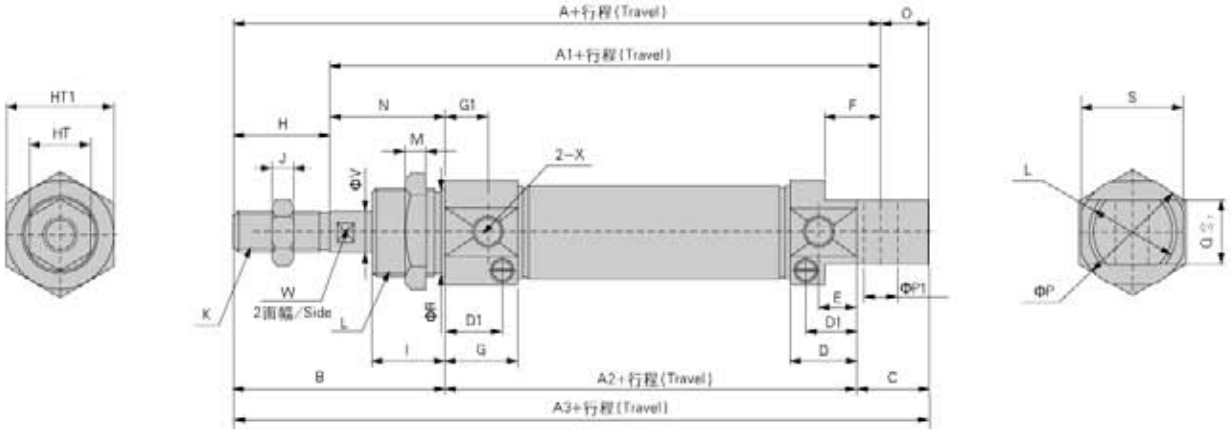

CM 型/Type

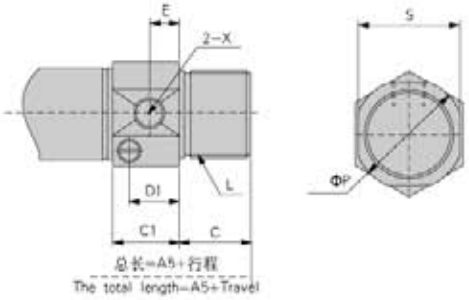

U 型/Type

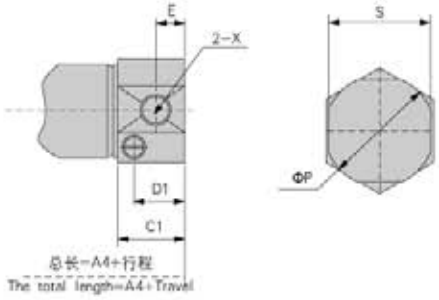

内径/符号(Bore/Symbol)	A	A1	A2	A3	A4	A5	B	C	C1	C2	D	D1	E	F	G	G1	H	I
20	115	95	62	126	106	126	44	20	15	8	15	7.5	8	12	15	8	20	20
25	126	104	65	137	115	137	50	22	15	8	15	8	8	12	15	8	22	22

内径/符号(Bore/Symbol)	J	K	L	M	N	O	P	P1	Q	R	S	T	T1	X	V	W
20	6	M8 x 1.25	M22 x 1.5	7	24	11	28	8	16	22	24	12	29	PT1/8	8	6
25	6	M10 x 1.25	M22 x 1.5	7	28	11	33.5	8	16	22	30	17	29	PT1/8	10	8

安装附件/Mounting kits

Y接头/Y Joint

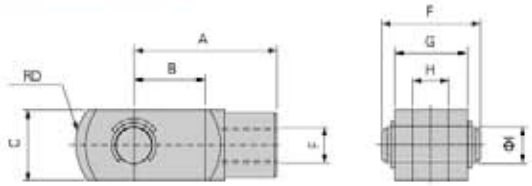

内径/符号(Bore/Symbol)	A	B	C	D	F	G	H	I
M4 x 0.7	16	8	8	6.5	12.8	8	4	4
M6 x 1.0	24	12	12	9.5	17	12	6	5
M8 x 1.25	32	16	16	13	21	16	8	8
M10 x 1.25	40	20	20	16	26	20	10	10

FA(FB)

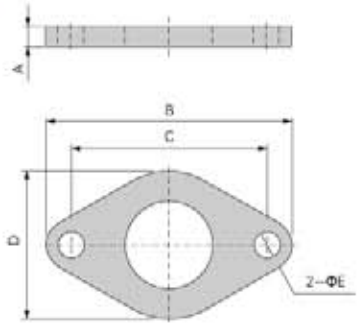

内径/符号(Bore/Symbol)	A	B	C	D	E
8	3	40	30	25	4.5
10	3	40	30	25	4.5
12	4	53	40	30	5.5
16	4	53	40	30	5.5
20	5	66	50	40	6.6
25	5	66	50	40	6.6

SDB

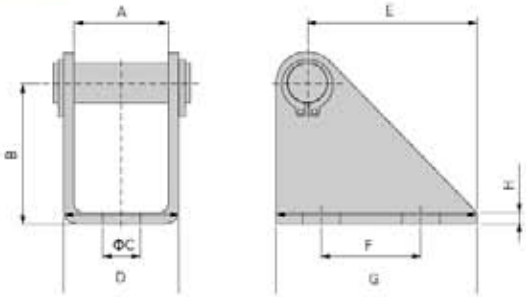

内径/符号(Bore/Symbol)	A	B	C	D	E	F	G	H
8	8.1	24	4.5	13	13.8	12.5	20	2.5
10	8.1	24	4.5	13	13.8	12.5	20	2.5
12	12.1	27	5.5	18	13	15	25	3
16	12.1	27	5.5	18	13	15	25	3
20	16.1	30	6.6	24	16	20	32	4
25	16.1	30	6.6	24	16	20	32	4

LB

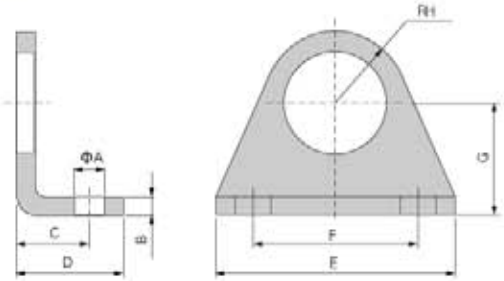

内径/符号(Bore/Symbol)	A	B	C	D	E	F	G	H
8	4.5	3	11	16	35	25	16	10
10	4.5	3	11	16	35	25	16	10
12	5.5	4	14	20	42	32	20	13
16	5.5	4	14	20	42	32	20	13
20	6.6	5	17	25	54	40	25	20
25	6.6	5	17	25	54	40	25	20

安装与使用/Install&use

- 工作中负载有变化，应选用输出力充裕的气缸，在高温条件下，应选用相应的耐高温气缸。
  The load would be changed during working process,so the cylinder with enough output force should be chosen ,on the case of high temperature , operator is suggested to choose the cylinder with high-temp seals!

- 气缸配管前，必须清除管道内的杂物，防止杂物进入气缸内。
  Before put in the air tube on the cylinder ,the inside surface of the pipe must be cleaned .In order to prevent sundries from entering into cylinder.

- 气缸使用介质应经过40μm以上滤芯过滤后方可使用。
  The medium used by cylinder can not be put into use until it has pass filtering by certain filtering element above 40μm.

- 在低温环境下，应采取抗冻措施，防止系统的水分结冰。
  Under condition of low temperature ,the anti-freezing measure must be adopted ,so as to avoid freezing of engineering system.

- 气缸在工作过程中应尽可能避免受侧向负载，以维持气缸的正常工作和使用寿命。
  During the working process,the cylinder should be avoid side-load,in order to maintain normal working and assure the lifetime of the cylinder.

- 气缸拆下长时间不使用，要注意表面防锈，进排气口应加防尘堵塞帽。
  If the cylinder has been out of work for a long time ,operator should take notice of surface rustproof,the dust proof cap is suggested to be added at air in and out hole .

气缸理论出力表/Table for theoretic power of a cylinder

气缸内径/Cylinder ID		20			25			32			40		
活塞杆外径/Out diameter of piston rod		8			10			12			16		
动作方式 Action type		押出单动 Single action(rear spring)	复动型/Double action		押出单动 Single action(rear spring)	复动型/Double action		押出单动 Single action(rear spring)	复动型/Double action		押出单动 Single action(rear spring)	复动型/Double action	
			压侧 Push side	拉侧 Pull side		压侧 Push side	拉侧 Pull side		压侧 Push side	拉侧 Pull side		压侧 Push side	拉侧 Pull side
受压面积 Pressure area(cm^2)		3.14	3.14	2.64	4.90	4.90	4.12	8.04	8.04	6.90	12.56	12.56	11.02
空气压力 Air pressure (Kgf/cm^2)	1	–	3.14	2.64	–	4.90	4.12	–	8.04	6.90	–	12.56	11.02
	2	1.57	6.28	5.28	2.45	9.80	8.24	4.02	16.08	13.80	6.28	25.12	22.04
	3	4.71	9.42	7.92	7.35	14.70	12.36	12.06	24.12	20.70	18.84	37.68	33.06
	4	7.85	12.56	10.56	12.25	19.60	16.48	20.10	32.16	27.60	31.40	50.24	44.08
	5	10.99	15.70	13.20	17.15	24.50	20.60	28.14	40.20	34.50	43.96	62.80	55.10
	6	14.13	18.84	15.84	22.05	29.40	24.72	36.18	48.24	41.40	56.52	75.36	66.12
	7	17.27	21.98	18.48	26.95	34.30	28.84	44.22	56.28	48.30	69.08	87.92	77.15
	8	20.41	25.12	21.12	31.85	39.20	32.96	52.26	64.32	55.20	81.64	100.48	88.16
	9	23.55	28.26	23.76	36.75	44.10	37.08	60.30	72.36	62.10	94.20	113.04	99.18

气缸理论出力计算方法/Formula for cylinder output power

$$F = P \times A$$

- A：活塞受压面积/Piston pressed area (cm^2)
- P：工作压力/Working pressure (Kgf/cm^2)
- F：气缸理论出力/The output power of cylinder (Kgf)

MF、MSF、MTF、MFC系列/SERIES

内部结构及主要零件材质/Inner structure and material list for main parts

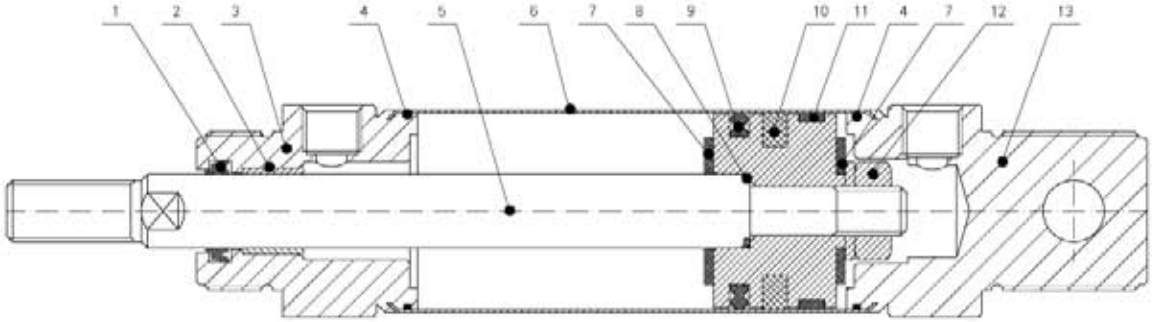

序号/No	名称/Name	材质/Material	序号/No	名称/Name	材质/Material
1	防尘圈/Anti dust seals	NBR	8	活塞杆O型圈/O-ring for piston rod	NBR
2	含油轴承/Oil bearing	烧基粉末合金/Sintered bronze	9	活塞圈/Piston ring	NBR
3	前端盖/Front cover	铝合金/Aluminium alloy	10	磁环/Magnet	铁氧体/Ferrite
4	管壁O型圈/O-ring for front cover	NBR	11	导向带/Wearing ring	POM
5	活塞杆/Piston rod	碳钢/Carbon steel	12	活塞固定螺帽/Nut for piston and piston rod fixed	碳钢/Carbon steel
6	缸筒/Tube	316不锈钢/Stainless steel	13	后端盖/Back cover	铝合金/Aluminium alloy
7	防撞垫片/Crash pad	NBR			

订购码/Ordering code

MF — 20 X 50 — U — S — LB

MF 系列代号/Magnet code

MF：复动型/Double action
MSF：单动押出型
Singleaction(rear spring)
MTF：单动引入型
MTF：Single action(front spring)
MFC：复动可调缓冲型
MFC：Double action with adjustable air cushioning

20 缸径/Bore

50 行程/Travel

U 后盖型式/Back cap type

CA：摆尾型/Swing back cap
U：平尾型/Flat back cap
CM：圆尾型/Round back cap

S 行程/Travel

空白：不附磁
Blank：Without magnet
S：附磁石
S：With magnet

LB 固定型式/Mounting type

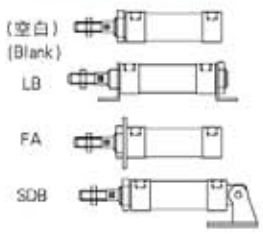

举例/Sample

1) 欲订购缸径为20mm，行程为50mm，后盖型式为摆尾型式，采用SDB型固定方式，标准复动型不锈钢迷你气缸，其正确的订购码代号为：MF-20X50-SDB。

1) If user need bore 20mm and 50mm travel SDB mounting type,standard double action stainless steel mini cylinder ,the correct order code is：MF-20X50-SDB.

2) 欲订购缸径为32mm，行程为50mm，后盖型式为平尾型的基本复动缓冲型不锈钢迷你气缸，其正确的订购码代号为：MF-32X50-U。

2) If user need bore 32mm and 50mm travel,flat end cap,double action with air cushion type stainless steel mini cylinder,the correct order code is:MF-32X50-U.

MF、MSF、MTF、MFC系列/SERIES

产品特性/Product features

免润滑/Free of lubrication

采用含油轴承，使活塞杆无需加油润滑。
Oil bearing is adopted so the piston rod do not need to be lubricated.

耐 久 性/Durable

气缸前后盖经过本色阳极氧化处理，不仅具有耐磨性、耐腐蚀性及耐久性，而且更显外观小巧，精美。
The surface treatment of end cap and cylinder body are anodize not only have abrasive resistance,corrosion resistance,durable ,but also very delicate and nice.

耐高温性/High temperature available

可采用耐高温密封材料，使气缸在150摄氏度高温条件下正常工作(客户需向本公司订作)。
Adopted of special sealing material, the cylinder can work normally at 150 degree (user should order it from us).

安装型式多样/Various mounting type

多种安装附件供客户选择。
Various mounting accessories are supplied.

附磁性/Magnetic property

气缸活塞上装有一个永久磁铁，它可触发安装在气缸上的磁性开关来感测气缸的运动位置。
The cylinder piston is equipped with a permanent magnet that can trigger the magnetic switch of the cylinder to detect the moving position of cylinder.



规 格/Specification

内径/Bore (mm)		20	25	32	40
动作型式/Action type		复动型/Double action 复动缓冲型/Double action with air cushion			
工作介质/Work medium		空气/Filtered air			
固定型式/Mounting type		基本型/Basic type, FA LB SDB			
使用压力范围/Operation pressure range(Kgf/cm²)		1～7.0			
保证耐压力/Proof pressure(Kgf/cm²)		13.5			
使用温度范围/Available temperature ℃		-5～70			
使用速度范围/Operation speed (mm/s)		50～750			
缓冲型式 Cushioning	标准型/Standard	防撞垫片/Cushion mat			
	缓冲型/Cushion	可调式缓冲/Adjustable air cushion			
接管口径/Port size		PT1/8			PT1/4

行 程/Travel

内径/Bore(mm)		标准行程 / Standard travel														最大行程/Max travel
复动型/Double action 复动缓冲型/Double action with air cushion	20	25	50	75	100	125	150	175	200							300
	25	25	50	75	100	125	150	175	200	250	300					500
	32	25	50	75	100	125	150	175	200	250	300	350	400	450	500	600
	40	25	50	75	100	125	150	175	200	250	300	350	400	450	500	600
单动型/Single action	20～40	25	50	75	100	125	150									150

※ 特殊行程请与本公司联系/Special travel should checked with our factory.

MF、MFC系列/SERIES

安装尺寸/Install dimension

CA型/Type

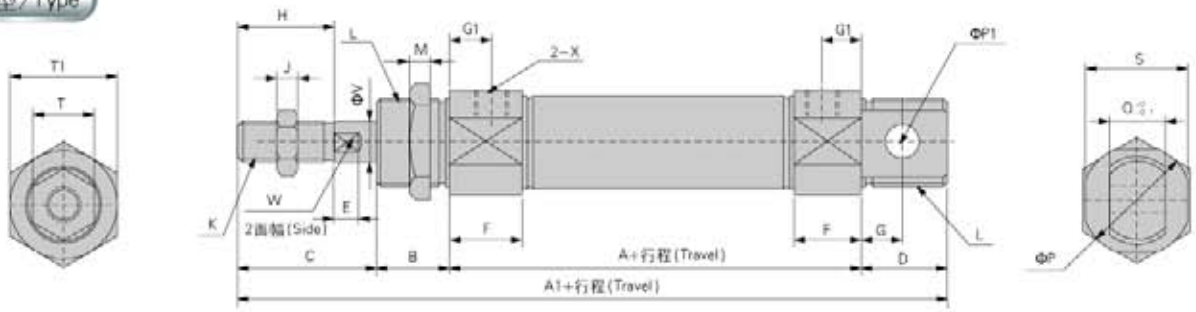

MFC型/Type

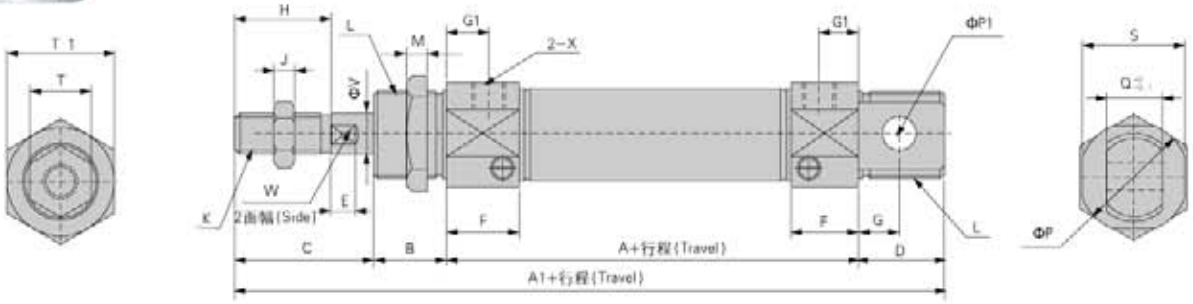

CM 型/Type

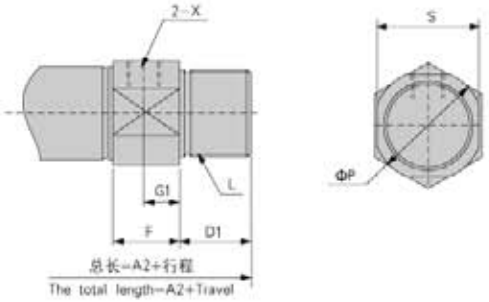

U 型/Type

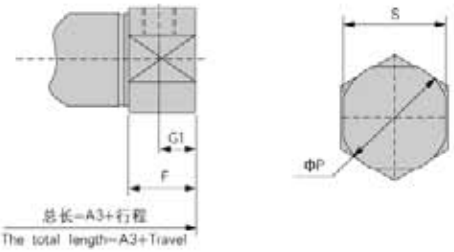

内径/符号(Bore/Symbol)	A	A1	A2	A3	B	C	D	D1	E	F	G	G1	H	J
20	62	124	116	103	13	28	21	13	5	15	12	8	18	6
25	62	128	118	107	13	32	21	13	5.5	15	12	8	22	6
32	64	136	122	109	13	32	27	13	5.5	15	15	8	22	9
40	88	165	154	138	16	34	27	16	7	21.5	15	11	24	7

内径/符号(Bore/Symbol)	K	L	M	P	P1	Q	S	T	T1	X	V	W
20	M8 x 1.25	M20 x 1.5	7	28	8	12	24	13	26	PT1/8	8	6
25	M10 x 1.25	M26 x 1.5	7	33.5	8	12	30	17	32	PT1/8	10	8
32	M10 x 1.25	M26 x 1.5	7	37.5	10	20	34.5	17	32	PT1/8	12	10
40	M14 x 1.5	M32 x 2.0	9	46.5	10	20	42.5	22	41	PT1/4	16	14

MSF系列/SERIES

安装尺寸/Install dimension

CA 型/Type

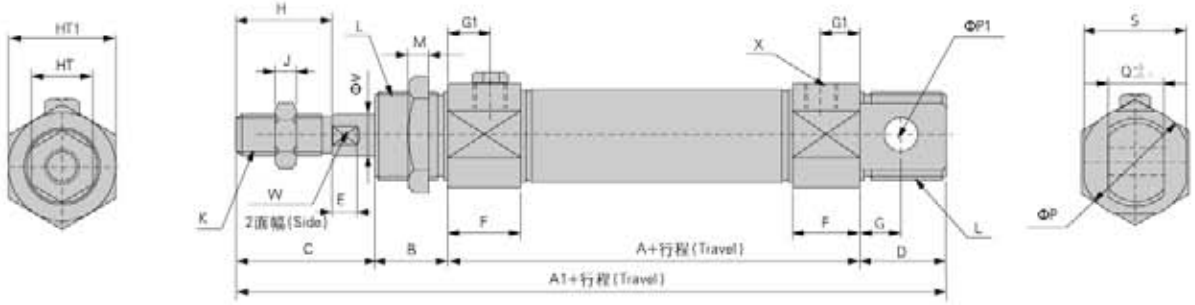

CM 型/Type

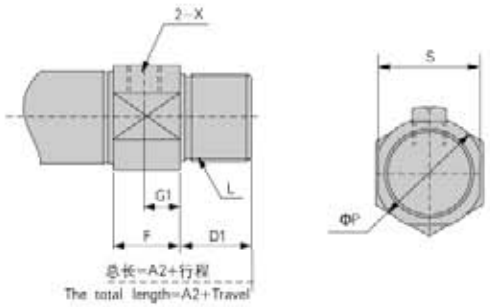

U 型/Type

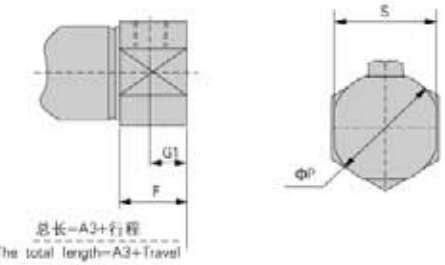

内径/符号(Bore/Symbol)	A		A1		A2		A3		B	C	D	D1	E	F	G
行 程/Travel	1～50	51～75	1～50	51～75	1～50	51～75	1～50	51～75							
20	87	112	149	174	141	166	128	153	13	28	21	13	5	15	12
25	87	112	153	178	145	170	132	157	13	32	21	13	5.5	15	12
32	89	114	161	186	147	172	134	159	13	32	27	13	5.5	15	15
40	113	138	190	215	179	206	163	188	16	34	27	16	7	21.5	15

内径/符号(Bore/Symbol)	G1	H	J	K	L	M	P	P1	Q	S	T	T1	X	V	W
20	8	15.5	6	M8 x 1.25	M20X1.5	7	28	8	12	24	13	26	PT1/8	8	6
25	8	19.5	6	M10 x 1.25	M26X1.5	7	33.5	8	12	30	17	32	PT1/8	10	8
32	8	19.5	6	M10 x 1.25	M26X1.5	7	37.5	10	20	34.5	17	32	PT1/8	12	10
40	11	21	7	M14 x 1.5	M32X2.0	9	46.5	10	20	42.5	22	41	PT1/4	16	14

MTF系列/SERIES

安装尺寸/Install dimension

CA型/Type

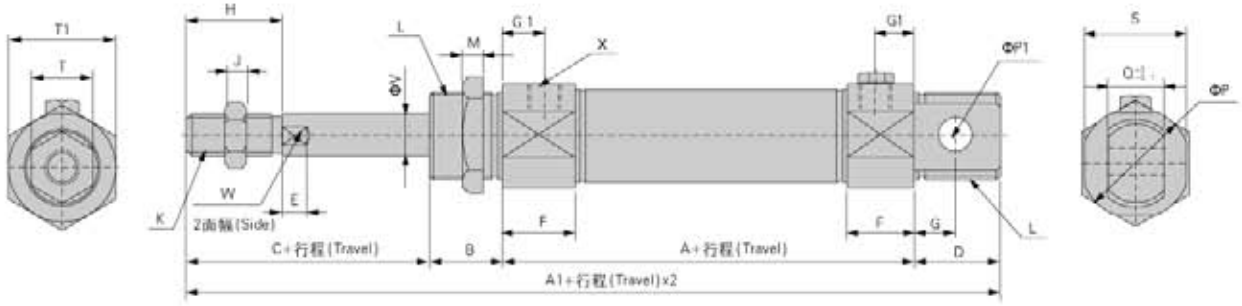

CM型/Type

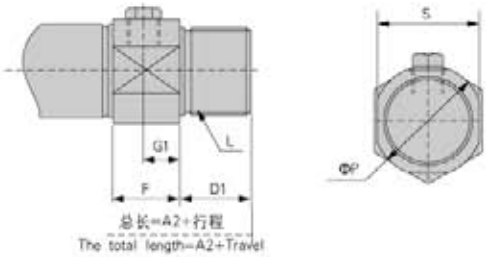

U 型/Type

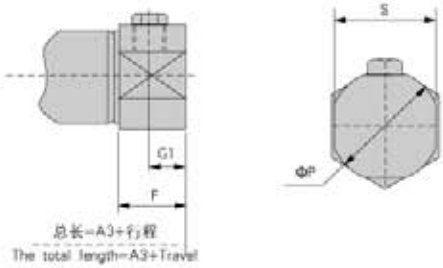

内径/符号(Bore/Symbol)	A		A1		A2		A3		B	C	D	D1	E	F	G
行 程/Travel	1～50	51～75	1～50	51～75	1～50	51～75	1～50	51～75							
20	87	112	149	174	141	166	128	153	13	28	21	13	5	15	12
25	87	112	153	178	145	170	132	157	13	32	21	13	5.5	15	12
32	89	114	161	186	147	172	134	159	13	32	27	13	5.5	15	15
40	113	138	190	215	179	206	163	188	16	34	27	16	7	21.5	15

内径/符号(Bore/Symbol)	G1	H	J	K	L	M	P	P1	Q	S	T	T1	X	V	W
20	8	18	6	M8 x 1.25	M20X1.5	7	28	8	12	24	13	26	PT1/8	8	6
25	8	22	6	M10 x 1.25	M26X1.5	7	33.5	8	12	30	17	32	PT1/8	10	8
32	8	22	6	M10 x 1.25	M26X1.5	7	37.5	10	20	34.5	17	32	PT1/8	12	10
40	11	24	7	M14 x 1.5	M32X2.0	8	46.5	10	20	42.5	22	41	PT1/4	16	14

MFD、MFCD、MFJ、MFCJ系列/SERIES

产品特性/Product features



免润滑/Free of lubrication

采用含油轴承，使活塞杆无需加油润滑。
Oil bearing is adopted so the piston rod do not need to be lubricated.

耐 久 性/Durable

气缸前后盖经过本色阳极氧化处理，不仅具有耐磨性、耐腐蚀性及耐久性，而且更显外观小巧、精美。
The surface treatment of end cap and cylinder body are anodize not only have abrasive resistance,corrosion resistance,durable ,but also very delicate and nice.

耐高温性/High temperature available

可采用耐高温密封材料，使气缸在150摄氏度高温条件下正常工作(客户需向本公司订作)。
Adopted of special sealing material ,the cylinder can work normally at 150 degree (user should order it from us).

安装型式多样/Various mounting type

多种安装附件供客户选择。
Various mounting accessories are supplied.

附磁性/Magnetic property

气缸活塞上装有一个永久磁铁，它可触发安装在气缸上的磁性开关来感测气缸的运动位置。
The cylinder piston is equipped with a permanent magnet that can trigger the magnetic switch of the cylinder to detect the moving position of cylinder.

规 格/Specification

内径/Bore (mm)		20	25	32	40
动作型式/Action type		复动型/Double action	复动缓冲型/Double action with air cushion		
工作介质/Work medium		空气/Filtered air			
使用压力范围/Operation pressure range(Kgf/cm^2)		1～7.0			
保证耐压力/Proof pressure(Kgf/cm^2)		13.5			
使用温度范围/Available temperature ℃		-5～70			
使用速度范围/Operation speed (mm/s)		50～750			
缓冲型式/Cushioning	标准型/Standard	防撞垫片/Cushion mat			
	缓冲型/Cushion	可调式缓冲/Adjustable air cushion			
接管口径/Port size		PT1/8			PT1/4

行 程/Travel

内径/Bore(mm)	标准行程 / Standard travel																
20	10	15	20	25	30	40	50	60	75	80	100	125	150	160	175	200	
25	10	15	20	25	30	40	50	60	75	80	100	125	150	160	175	200	250
32	10	15	20	25	30	40	50	60	75	80	100	125	150	160	175	200	250
40	10	15	20	25	30	40	50	60	75	80	100	125	150	160	175	200	250

举例/Sample

1) 欲订购缸径为20mm，行程为50mm，附磁石双轴复动型不锈钢迷你气缸，其正确的订购码代号为：MFD-20X50-S。
1) If user need bore 20mm and 50mm travel,with magnet two rod double action stainless steel mini cylinder ,the correct order code is:MFD-20X50-S.

2) 欲订购缸径为32mm，行程为100mm，调整行程为25mm，不附磁双轴复动可调缓冲型不锈钢迷你气缸，其正确的订购码代号为：MFCJ-32X100-25。
2) If user need bore 32mm and 100mm travel,25mm adjustable travel ,two rod double action stainless steel mini cylinder with adjustable air cushioning ,the correct order is:MFCJ-32X100-25.

订购码/Ordering code

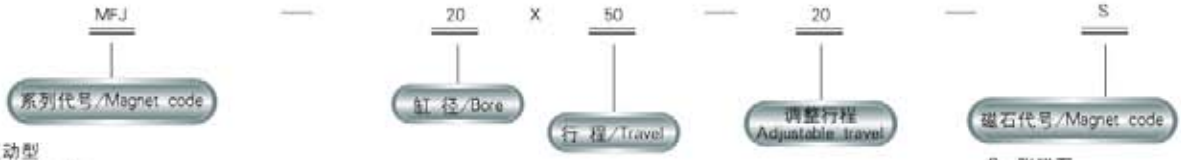

MFD：双轴复动型
MFD:Two rod double action
MFCD：双轴复动可调缓冲型
MFCD:Two rod double action with adjustable air cushioning
MFJ：双轴复动行程可调型
MFJ:Two rod double action with adjustable travel
MFCJ：双轴复动可调缓冲行程可调型
MFCJ:Two rod double action with adjustable travel and adjustable air cushioning

S：附磁石
S：With magnet
空白：不附磁
Blank：Without magnet

MFD、 MFCD系列/SERIES

安装尺寸/Install dimension

MFD型/MFD Type

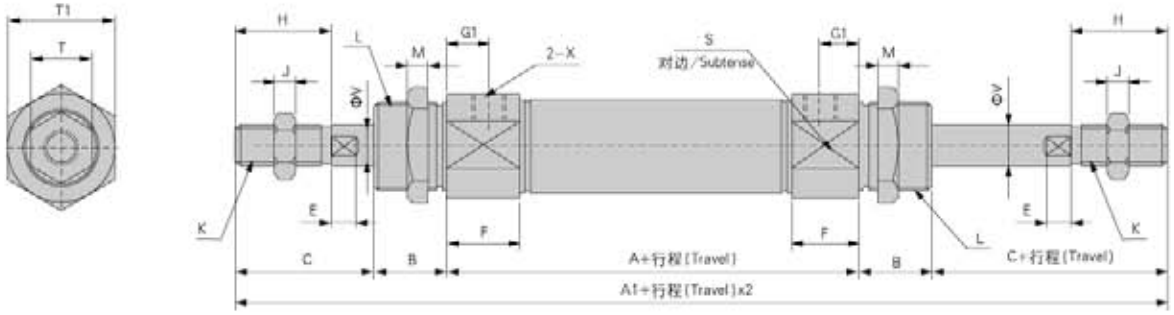

MFCD型/MFCD Type

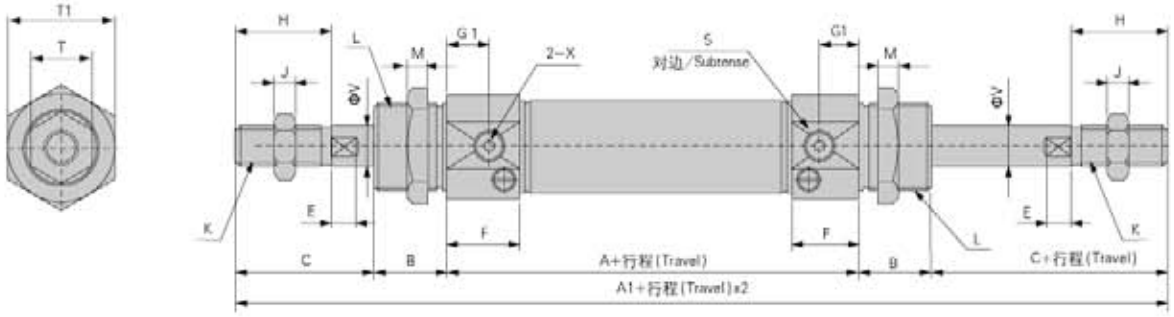

内径/符号(Bore/Symbol)	A	A1	B	C	E	F	G1	H	J
20	62	144	13	28	5	15	8	18	6
25	62	152	13	32	5.5	15	8	22	6
32	64	154	13	32	5.5	15	8	22	6
40	88	188	16	34	7	21.5	11	24	7

内径/符号(Bore/Symbol)	L	L	M	S	T	T1	X	V
20	M8X1.25	M20X1.5	7	24	13	26	PT1/8	8
25	M10X1.25	M26X1.5	7	30	17	32	PT1/8	10
32	M10X1.25	M26X1.5	7	34.5	17	32	PT1/8	12
40	M14X1.5	M32X2.0	9	42.5	22	41	PT1/4	16

MFJ、MFCJ系列/SERIES

安装尺寸/Install dimension

MFJ型/MFJ Type

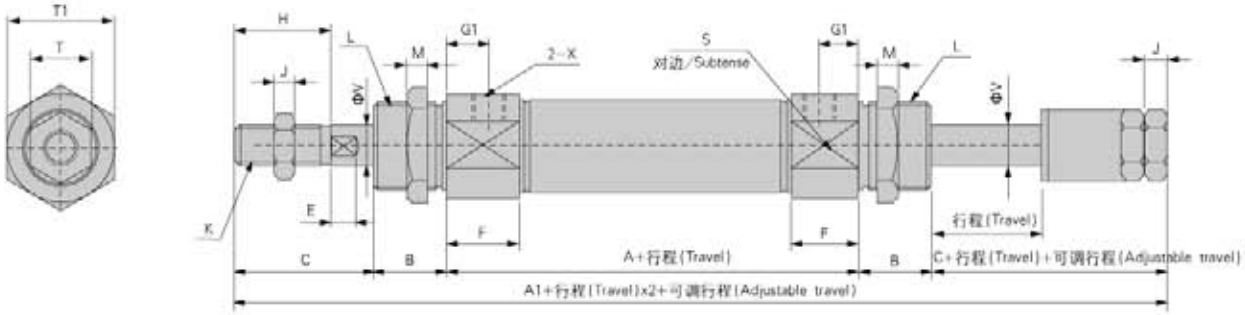

MFCJ型/MFCJ Type

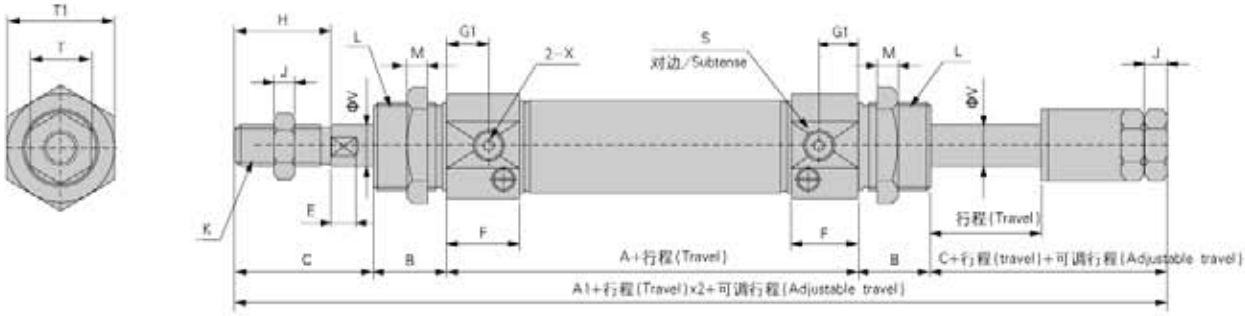

内径/符号(Bore/Symbol)	A	A1	B	C	C1	E	F	G1	H	J
20	62	141	13	28	25	5	15	8	18	6
25	62	147	13	32	27	5.5	15	8	22	6
32	64	149	13	32	27	5.5	15	8	22	6
40	88	182	16	34	28	7	21.5	11	24	7

内径/符号(Bore/Symbol)	K	L	M	S	T	T1	X	V
20	M8X1.25	M20X1.5	7	24	13	26	PT1/8	8
25	M10X1.25	M26X1.5	7	30	17	32	PT1/8	10
32	M10X1.25	M26X1.5	7	34.5	17	32	PT1/8	12
40	M14X1.5	M32X2.0	9	42.5	22	41	PT1/4	16

安装附件/Mounting kits

订购码/Ordering code

MF — 32 — LB

- MF → 系列代号/Magnet code
- 32 → 缸 径/Bore
- LB → 附件型号 Mounting kits code

MF：复动型
MF：Double action
MSF：单动押出型
MSF：Single action(rear spring)
MTF：单动引入型
MTF：Single action(front spring)

安装件类 Install kits	FA	FA法兰型/Flange
	SDB	SDB脚座型/Foot mount
	LB	LB脚座型/Foot mount
	TC	TC轴耳型/Intermediate hinge
接头类/Joint	Y	Y接头/Joint
	I	I接头/Joint

附件尺寸/Accessories size

Φ20～Φ32

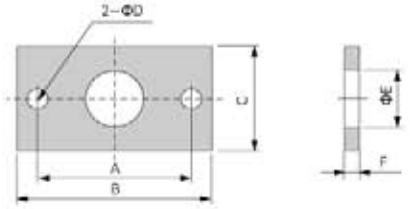

内径/符号(Bore/Symbol)	A	B	C	D	E	F	G
20	60	75	34	7	20.2	4	–
25	60	75	40	7	26.2	4	–
32	60	75	40	7	26.2	4	–
40	66	82	52	7	32.2	5	36

Φ40

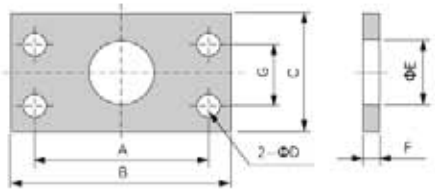

LB

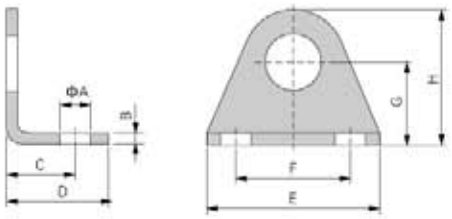

内径/符号(Bore/Symbol)	A	B	C	D	E	F	G	H
20	6.8	3.2	20	28	55	40	25	40
25	6.8	3.2	20	28	55	40	28	47
32	6.8	3.2	20	28	55	40	28	47
40	7	3.2	23	33	75	55	30	54

SDB

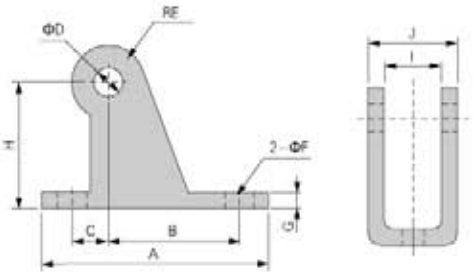

内径/符号(Bore/Symbol)	A	B	C	D	E	F	G	H	I	J
20	58	30	15	8	10	6.8	3.2	30	12	18.4
25	59	30	15	8	10	6.8	3.2	30	12	18.4
32	75	40	15	10	13	9	4	40	20	28
40	75	40	15	10	13	9	4	40	20	28

SDB用PIN/PIN for SDB

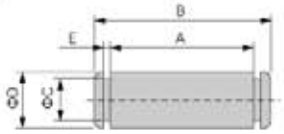

内径/符号(Bore/Symbol)	A	B	C	D	E
20～25	19.4	24	7	8	0.8
32～40	28.5	34.5	9	10	2.2

联接附件/Connector kits

订购码/Ordering code

TC轴耳/TC Hinge

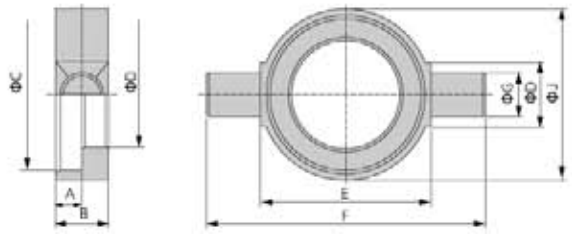

内径/符号(Bore/Symbol)	A	B	C	D	E	F	G	H	J
20	5	10	28.2	20.2	32	52	8	12	32
25	5	10	34.2	26.2	40	60	9	12	40
32	5	10	34.2	26.2	40	60	9	12	40
40	5	11	45.2	32.2	53	77	10	14	53

Y接头/Y Joint

Φ20～Φ32

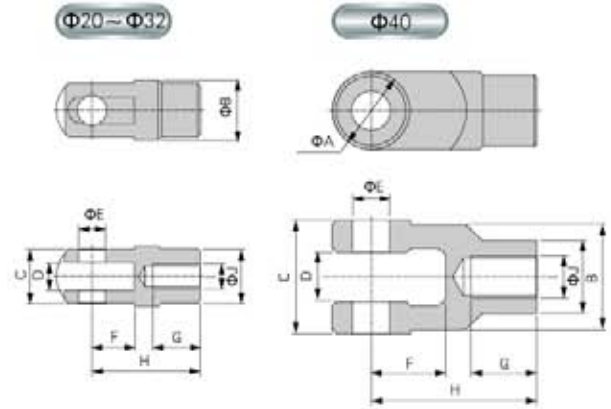

Φ40

内径/符号(Bore/Symbol)	A	B	C	D	E	F	G	H	I	J
20	12	20	18	9	9	14	16	36	M8x1.25	18
25	12	20	18	9	9	14	18	38	M10x1.25	18
32	12	20	18	9	9	14	18	38	M10x1.25	18
40	26	35	38	16	12	25	22	55	M14x1.5	24

I接头/I Joint

Φ20～Φ32

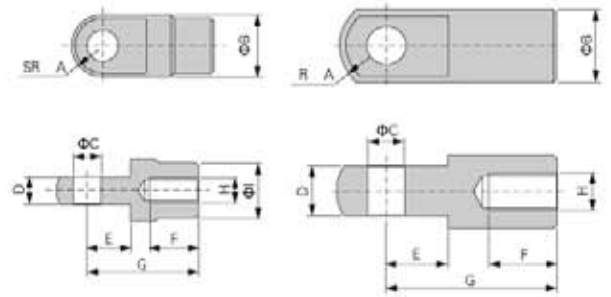

Φ40

内径/符号(Bore/Symbol)	A	B	C	D	E	F	G	H	I
20	10	20	9	9	14	16	36	M8x1.25	18
25	10	20	9	9	14	18	38	M10x1.25	18
32	10	20	9	9	14	18	38	M10x1.25	18
40	15.5	24	12	16	20	22	55	M14x1.5	24

Y接头用PIN/PIN for Y Joint

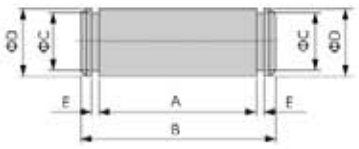

内径/符号(Bore/Symbol)	A	B	C	D	E
20～32	19.2	25	8	9	0.9
40	38.8	46	10	12	1.1

感应开关/Sensor switch

相关尺寸/Specification

CS1-F

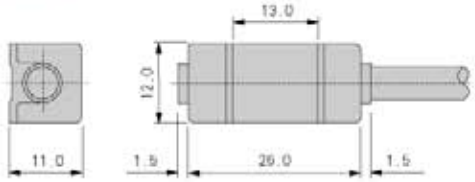



CS1-U

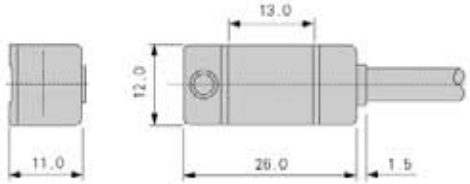

CS1-S

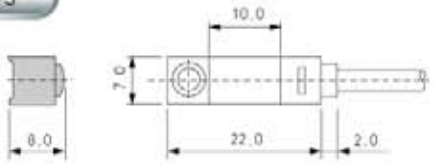

接线图/Wiring diagram

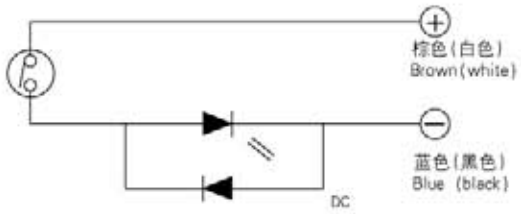

规 格/Specification

感应开关型式 Sensor switch model	使用电压范围 Available voltage	使用电流范围 Available current	反应时间 Reflect time	抗冲击性 Anti concussion	耐震程度 Seismic degree	使用温度范围 Available temperature	保护等级 Protect rate	指示灯 Light	电线长度 Wire length	寿命 Life time
CS1-F CS1-U	DC:5V-240V AC:5V-380V	DC:5-60mA AC:5-50mA	最大1ms MAX 1ms	300m/S² (30G)	10-55Hz	0-60℃	IP-67	LED	2M	至少500万次 At least 5 million times
CS1-S	DC:5V-240V AC:5V-240V	DC:5-50mA AC:5-40mA	最大1ms MAX 1ms	300m/S² (30G)	10-55Hz	0-60℃	IP-67	LED	2M	至少500万次 At least 5 million times

订购码/Ordering code

CS1 —— U

型 号/Model

CS1气缸用磁性开关
CS1 Sensor switch

型 式/Type

F:向前型/Front type
U:向上型/Up type
S:超小型/Super small

BL —— 40

型 号/Model

BL:不锈钢迷你气缸
感应开关固定带
BL:Sensor switch mounting
belt used for stainless steel

气缸内径/Bore

20:20mm
25:25mm
32:32mm
40:40mm

举例/Sample

1) 欲订购与不锈钢迷你气缸配套的磁感应开关，型式为向前型的磁感应开关。其正确的订购码代号为：CS1-F。
If user needs front type magnet sensor switch which will be used for stainless steel mini cylinder the correct code is:CS1-F.

2) 欲订购与缸径为40mm的不锈钢迷你气缸配套的磁感应开关固定带。其正确的订购码代号为：BL-40。
If user need magnet sensor switch fixed belt which will be used for bore 40mm stainless steel mini cylinder the correct code is:BL-40.

安装与使用/Install&use

- 工作中负载有变化，应选用输出力充裕的气缸，在高温条件下，应选用相应的耐高温气缸。
  The load would be changed during working process,so the cylinder with enough output force should be chosen ,on the case of high temperature , operator is suggested to choose the cylinder with high-temp seals!
- 气缸配管前，必须清除管道内的杂物，防止杂物进入气缸内。
  Before put in the air tube on the cylinder ,the inside surface of the pipe must be cleaned .In order to prevent sundries from entering into cylinder.
- 气缸使用介质应经过40μm以上滤芯过滤后方可使用。
  The medium used by cylinder can not be put into use until it has pass filtering by certain filtering element above 40um.
- 在低温环境下，应采取抗冻措施，防止系统的水分结冰。
  Under condition of low temperature ,the anti-freezing measure must be adopted ,so as to avoid freezing of engineering system.
- 气缸在工作过程中应尽可能避免受侧向负载，以维持气缸的正常工作和使用寿命。
  During the working process ,the cylinder should be avoid side-load,in order to maintain normal working and assure the lifetime of the cylinder.
- 气缸拆下长时间不使用，要注意表面防锈，进排气口应加防尘堵塞帽。
  If the cylinder has been out of work for a long time ,operator should take notice of surface rustproof,the dust proof cap is suggested to be added at air in and out hole .

气缸理论出力表/Table for theoretic power of a cylinder

气缸内径/Cylinder ID		16			20			25			32			40			50		63	
活塞杆外径/Out diameter of piston rod		6			8			10			12			16			20		20	
动作方式 Action type		推出单动 Single action(rear spring)	复动型/Double action 压侧 Push side	复动型/Double action 拉侧 Pull side	推出单动 Single action(rear spring)	复动型/Double action 压侧 Push side	复动型/Double action 拉侧 Pull side	推出单动 Single action(rear spring)	复动型/Double action 压侧 Push side	复动型/Double action 拉侧 Pull side	推出单动 Single action(rear spring)	复动型/Double action 压侧 Push side	复动型/Double action 拉侧 Pull side	推出单动 Single action(rear spring)	复动型/Double action 压侧 Push side	复动型/Double action 拉侧 Pull side	复动型/Double action 压侧 Push side	复动型/Double action 拉侧 Pull side	复动型/Double action 压侧 Push side	复动型/Double action 拉侧 Pull side
受压面积 Pressure area(cm^2)		2.01	2.01	1.81	3.14	3.14	2.64	4.90	4.90	4.12	8.04	8.04	6.90	12.56	12.56	10.55	19.63	17.62	31.17	29.15
空气压力 Air pressure (Kgf/cm^2)	1	–	2.01	1.81	–	3.14	2.64	–	4.90	4.12	–	8.04	6.90	3.75	12.56	10.55	19.63	17.62	31.17	29.15
	2	–	4.02	3.62	1.26	6.28	5.28	2.91	9.80	8.24	7.66	16.08	13.80	16.31	25.12	21.10	39.26	35.24	62.34	60.31
	3	2.01	6.03	5.43	4.40	9.42	7.92	7.81	14.70	12.36	15.70	24.12	20.70	28.87	37.68	31.65	58.89	52.86	93.51	89.46
	4	4.02	8.04	7.24	7.54	12.56	10.56	12.71	19.60	16.48	23.74	32.16	27.60	41.43	50.24	42.20	78.52	70.48	124.68	118.61
	5	6.03	10.05	9.05	10.68	15.70	13.20	17.61	24.50	20.60	31.78	40.20	34.50	53.99	62.80	52.75	98.15	88.10	155.85	147.76
	6	8.04	12.06	10.86	13.82	18.84	15.84	22.51	29.40	24.72	39.82	48.24	41.40	66.55	75.36	63.30	117.78	105.72	187.02	176.91
	7	10.04	14.07	12.67	19.96	21.98	18.48	27.41	34.30	28.84	47.86	56.28	48.30	79.11	87.92	73.85	137.41	123.34	218.19	206.06
	8	–	–	–	30.10	25.12	21.12	32.31	39.20	32.96	55.90	64.32	55.20	91.67	100.48	84.40	157.04	140.96	249.36	235.21
	9	–	–	–	23.24	28.26	23.76	37.21	44.10	37.08	63.94	72.36	62.10	104.23	113.04	94.95	176.67	158.58	280.53	264.36

气缸理论出力计算方法/Formula for cylinder output power

$$F = P \times A - Fo$$

- Fo：弹簧复位力/Spring return power (Kgf)
- A：活塞受压面积/Piston pressed area (cm^2)
- P：工作压力/Working pressure (Kgf/cm^2)
- F：气缸理论出力/The output power of cylinder (Kgf)

MAL系列/SERIES

内部结构及主要零件材质/Inner structure and material list for main parts

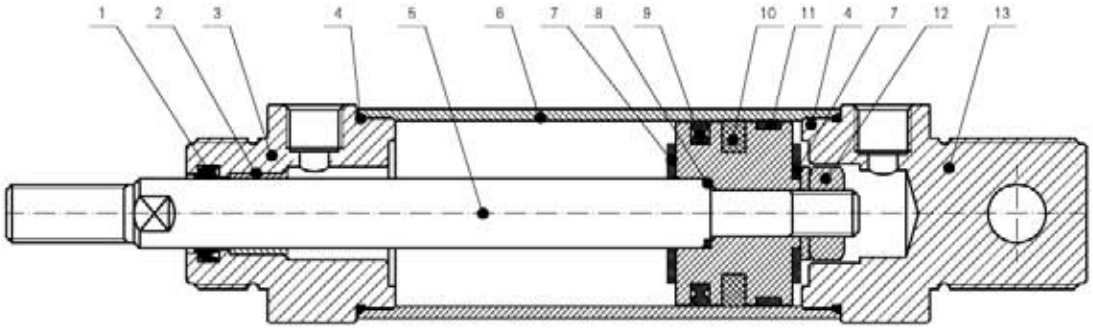

序号/No	名称/Name	材质/Material	序号/No	名称/Name	材质/Material
1	防尘圈/Anti dust seals	NBR	8	活塞杆O型圈/O-ring for piston rod	NBR
2	含油轴承/Oil bearing	铜基粉末合金/Sintered bronze	9	活塞圈/Piston ring	NBR
3	前端盖/Front cover	铝合金/Aluminium alloy	10	磁环/Magnet	铁氧体/Ferrite
4	管壁O型圈/O-ring for front cover	NBR	11	导向带/Wearing ring	POM
5	活塞杆/Piston rod	316不锈钢/SS 316	12	活塞固定螺帽/Nut for piston and piston rod fixed	碳钢/Carbon steel
6	缸筒/Tube	铝合金/Aluminium alloy	13	后端盖/Back cover	铝合金/Aluminium alloy
7	防撞垫片/Crash pad	NBR			

订购码/Ordering code

MAL —— CA 20 X 50 —— S —— LB

- MAL 系列代号/Magnet code
  - MAL：复动型/Double action
- CA 后盖型式/Back cap type
  - CA：摆尾型/Swing back cap
  - U：平尾型/Flat back cap
  - CM：圆尾型/Round back cap
- 20 缸径/Bore
- 50 行程/Travel
- S 感应磁石/Magnet
  - S：附磁石
  - S：With magnet
  - 空白：不附磁
  - Blank：Without magnet
- LB 固定型式/Mounting type
  - (空白) (Blank)
  - LB
  - FA
  - SDB

举例/Sample

1) 欲订购缸径为20mm，行程为50mm，后盖型式为摆尾型式，采用LB型固定方式，附磁石的标准复动型铝合金迷你气缸，其正确的订购码代号为：MAL-CA20X50-S-LB。

1) If user need bore 20mm and 50mm travel, swing back cap, LB foot mounting type with magnet, double action aluminium alloy mini cylinder, the correct order is:MAL-CA-20X50-S-LB.

2) 欲订购缸径为32mm，行程为100mm，后盖型式为平尾型的基本型不附磁石的标准复动型铝合金迷你气缸，其正确的订购码代号为：MAL-U32X100。

2) If user need bore 32mm and 100mm travel,flat back cap,standard double action aluminium alloy mini cylinder,the correct order is:MAL-U32X100.

铝合金迷你气缸MAL系列
ALUMINIUM ALLOY MINI CYLINDER MAL SERIES

BANGYE®

MAL系列/SERIES

产品特性/Product features

免润滑/Free of lubrication

采用含油轴承，使活塞杆无需加油润滑。
Oil bearing is adopted so the piston rod do not need to be lubricated.

耐 久 性/Durable

气缸本体、前后盖经过本色阳极氧化处理，不仅具有耐磨性、耐腐蚀性及耐久性，而且更显外观小巧，精美。
The surface treatment of end cap and cylinder body are anodize not only have abrasive resistance,corrosion resistance,durable ,but also very delicate and nice.

耐高温性/High temperature available

可采用耐高温密封材料，使气缸在150摄氏度高温条件下正常工作(客户需向本公司订作)。
Adopted of special sealing material ,the cylinder can work normally at 150 degree (user should order it from us).

安装型式多样/Various mounting type

多种安装附件供客户选择。
Various mounting accessories are supplied.



符 号/Symbol



规 格/Specification

内径/Bore (mm)	16	20	25	32	40	50	63
动作型式/Action type	复动型/Double action						
工作介质/Work medium	空 气/Filtered air						
固定型式/Mounting type	基本型/Basic type, FA LB SDB						
使用压力范围/Operation pressure range(Kgf/cm²)	1～9.0						
保证耐压力/Proof pressure(Kgf/cm²)	13.5						
使用温度范围/Available temperature ℃	0～70						
使用速度范围/Operation speed (mm/s)	30～800				30～500		
接管口径/Port size	M5	PT1/8			PT1/4		

行 程/Travel

内径/Bore(mm)	标准行程 / Standard travel														最大行程/Max travel	容许行程/Available travel
16	25	50	75	100	125	150	175	200							300	500
20	25	50	75	100	125	150	175	200	250	300					500	800
25	25	50	75	100	125	150	175	200	250	300	350	400	450	500	800	1200
32	25	50	75	100	125	150	175	200	250	300	350	400	450	500	800	1200
40	25	50	75	100	125	150	175	200	250	300	350	400	450	500	1200	1500
50	25	50	75	100	125	150	175	200	250	300	350	400	450	500	1200	1500
63	25	50	75	100	125	150	175	200	250	300	350	400	450	500	1200	1500

※ 特殊行程请与本公司联系/Special travel should checked with our factory.

MAL系列/SERIES

安装尺寸/Install dimension

Φ16~Φ63

摆尾型/Swing back cap

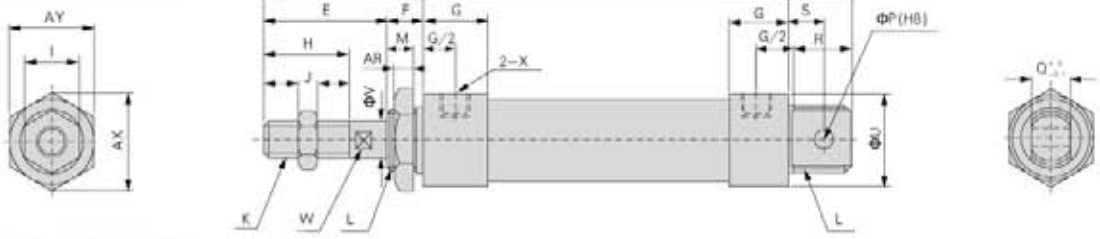

圆尾型/Round back cap

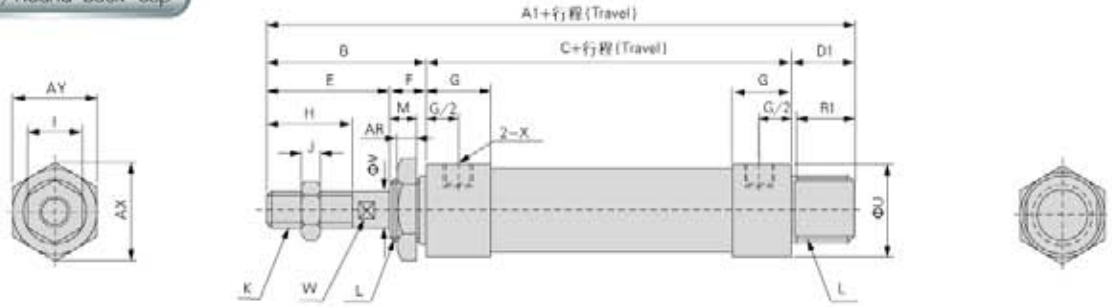

平尾型/Flat back cap

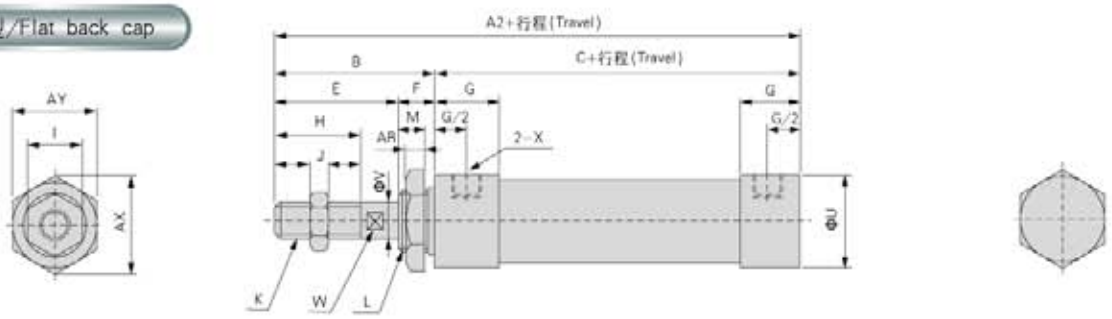

内径/符号(Bore/Symbol)	A	A1	A2	B	C	D	D1	E	F	G	H	I	J	K
16	114	106	98	38	60	16	8	21	16	10	18	10	4	M 6x1.0
20	131	122	110	40	70	21	12	28	12	16	20	12	5	M8x1.25
25	135	128	114	44	70	21	14	30	14	16	22	17	6	M10x1.25
32	141	128	114	44	70	27	14	30	14	16	22	17	6	M10x1.25
40	165	152	138	46	92	27	14	32	14	22	24	19	7	M12x1.25
50	173	160	146	62	94	27	14	32	20	22	24	19	8	M14x1.5
63	173	160	146	62	94	27	14	32	20	22	24	19	8	M14x1.5

内径/符号(Bore/Symbol)	L	M	P	Q	R	R1	S	U	V	W	X	AR	AX	AY
16	M 16x1.5	10	6	12	14	8	9	23	6	5	M5	7	27	24
20	M 22x1.5	10	8	16	19	10	12	29	8	6	PT1/8	7	33	29
25	M 22x1.5	12	8	16	19	12	12	34	10	8	PT1/8	7	33	29
32	M 24x2.0	12	10	16	25	12	15	39.5	12	10	PT1/8	8	37	32
40	M 30x2.0	12	12	20	25	12	15	49.5	16	14	PT1/4	9	47	41
50	M 36x2.0	15	14	20	25	14	15	59	16	14	PT1/4	11	53	47
63	M 36x2.0	15	14	20	25	14	15	72	16	14	PT1/4	11	53	47

MSAL系列/SERIES

订购码/Ordering code

MSAL — CA — 20 X 50 — S — LB

- MSAL：系列代号/Magnet code
  - MSAL：单动型/Single action
- CA：后盖型式/Back cap type
  - CA：摆尾型/Swing back cap
  - U：平尾型/Flat back cap
  - CM：圆尾型/Round back cap
- 20：缸 径/Bore
- 50：行 程/travel
- S：感应磁石/Magnet
  - 空白：不附磁
  - Blank：Without magnet
  - S：附磁石
  - S：With magnet
- LB：固定型式/Mounting type

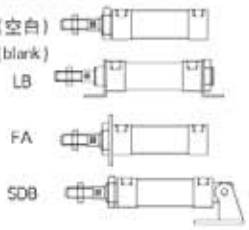

举例/Sample

1）欲订购缸径为20mm，行程为50mm，后盖型式为摆尾型式，采用SDB型固定方式，附磁石的单动型铝合金迷你气缸，其正确的订购码代号为：MSAL-CA20X50-S-SDB。

1) If user need bore 20mm and 50mm travel,swing end cap,SDB mounting type with magnet ,single action(rear spring) type aluminium alloy mini cylinder ,the correct order code is:MASL-CA20X50-S-SDB.

2）欲订购缸径为32mm，行程为100mm，后盖型式为平尾型的基本型不附磁石的单动型铝合金迷你气缸，其正确的订购码代号为：MSAL-U32X100。

2) If user need bore 32mm and 100mm travel,flat end cap ,single action(rear spring) type aluminium alloy mini cylinder ,the correct order code is:MSAL-U32X100.

符 号/Symbol



规 格/Specification

内径/Bore (mm)	16	20	25	32	40	50	63
动作型式/Action type	单动押出型/Single action(rear spring)						
工作介质/Work medium	空 气/Filtered air						
固定型式/Mounting type	基本型/Basic type，FA，LB，SDB						
使用压力范围/Operation pressure range(Kgf/cm²)	1～9.0						
保证耐压力/Proof pressure(Kgf/cm²)	13.5						
使用温度范围/Available temperature ℃	0～70						
使用速度范围/Operation speed (mm/s)	30～800						
接管口径/Port size	M5	PT1/8			PT1/4		

行 程/Travel

内径/Bore(mm)	标准行程/Standard travel				最大行程/Max travel	容许行程/Available travel
16	25	50	75	100	100	150
20	25	50	75	100	100	150
25	25	50	75	100	100	150
32	25	50	75	100	100	150
40	25	50	75	100	100	150
50	25	50	75	100	100	150
63	25	50	75	100	100	150

MSAL系列/SERIES

安装尺寸/Install dimension

Φ20~Φ40

摆尾型/Swing back cap



圆尾型/Round back cap

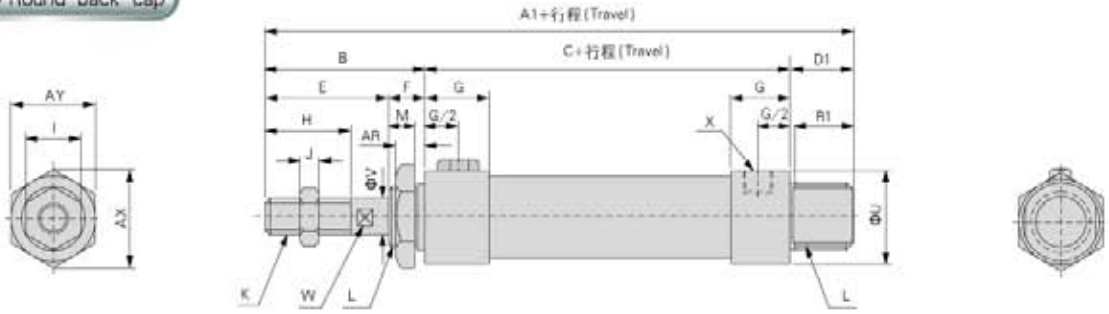

平尾型/Flat back cap

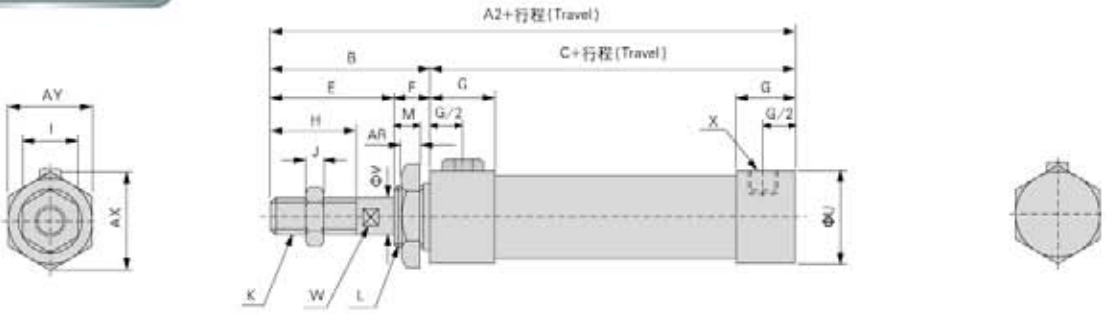

符号/Symbol	A		A1		A2		B	C		D	D1	E	F	G	H	I	J
内径/符号(Bore/Symbol)	0-50	51-100	0-50	51-100	0-50	51-100		0-50	51-100								
20	131	156	122	147	110	135	40	70	95	21	12	28	12	16	20	12	5
25	135	160	128	153	114	139	44	70	95	21	14	30	14	16	22	17	6
32	141	166	128	153	114	139	44	70	95	27	14	30	14	16	22	17	6
40	165	190	153	177	138	163	46	92	117	27	14	32	14	22	24	19	7

内径/符号(Bore/Symbol)	K	L	M	P	Q	R	R1	S	U	V	W	X	AR	AX	AY
20	M8x1.25	M22x1.5	10	8	16	19	12	12	29	8	6	PT1/8	7	33	29
25	M10x1.25	M22x1.5	12	8	16	19	12	12	34	10	8	PT1/8	7	33	29
32	M10x1.25	M24x2.0	12	10	16	25	12	15	39.5	12	10	PT1/8	8	37	32
40	M12x1.25	M30x2.0	12	12	20	25	12	15	49.5	16	14	PT1/4	9	47	41

铝合金迷你气缸MAL系列
ALUMINIUM ALLOY MINI CYLINDER MAL SERIES

BANGYE

MALD系列/SERIES

产品特性/Product features

免润滑/Free of lubrication

采用含油轴承，使活塞杆无需加油润滑。
Oil bearing is adopted so the piston rod do not need to be lubricated.

耐 久 性/Durable

气缸本体，前后盖经过本色阳极氧化处理，不仅具有耐磨性、耐腐蚀性及耐久性，而且更显外观小巧、精美。
The surface treatment of end cap and cylinder body are anodize not only have abrasive resistance,corrosion resistance,durable ,but also very delicate and nice.

耐高温性/High temperature available

可采用耐高温密封材料，使气缸在150摄氏度高温条件下正常工作(客户需向本公司订作)。
Adopted of special sealing material ,the cylinder can work normally at 150 degree (user should order it from us).

安装型式多样/Various mounting type

多种安装附件供客户选择。
Various mounting accessories are supplied.



符 号/Symbol

MALD

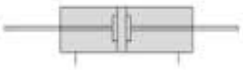

MALD-S



规 格/Specification

内径/Bore (mm)	16	20	25	32	40	50	63
动作型式/Action type	复动型/Double action						
工作介质/Work medium	空气/Filtered air						
固定型式/Mounting type	基本型/Basic type FA型/Type LB型/Type						
使用压力范围/Operation pressure range(Kgf/cm²)	1～9.0						
保证耐压力/Proof pressure(Kgf/cm²)	13.5						
使用温度范围/Available temperature ℃	0～70						
使用速度范围/Operation speed (mm/s)	30～800						
接管口径/Port size	M5	PT1/8			PT1/4		

行 程/Travel

内径/Bore(mm)	标准行程/Standard travel									最大行程/Max travel	容许行程/Available travel
16	25	50	75	100	125	150				200	300
20	25	50	75	100	125	150	175	200		200	300
25	25	50	75	100	125	150	175	200	250	250	300
32	25	50	75	100	125	150	175	200	250	250	300
40	25	50	75	100	125	150	175	200	250	250	300
50	25	50	75	100	125	150	175	200	250	250	300
63	25	50	75	100	125	150	175	200	250	250	300

※ 特殊行程请与本公司联系/Special travel should checked with our factory.

MALD系列/SERIES

订购码/Ordering code

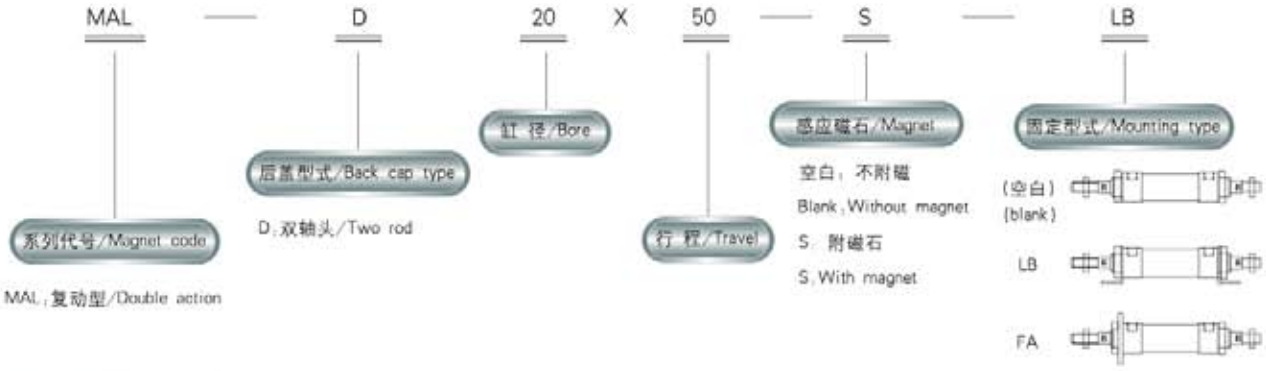

举例/Sample

1）欲订购缸径为40mm，行程为50mm，采用LB型固定方式，附磁石的双轴复动型铝合金迷你气缸，其正确的订购码代号为：MALD-40X50-S-LB。

1) If user need bore 40mm and 50mm travel,LB foot mounting type ,with magnet,two rod double action aluminium alloy mini cylinder,the correct order is:MALD-40X50-S-LB.

2）欲订购缸径为32mm，行程为100mm，采用FA型固定方式，不附磁石的双轴复动型铝合金迷你气缸，其正确的订购码代号为：MALD-32X100-FA。

2) If user need bore 32mm and 100mm travel,FA mounting type ,two rod double action aluminium alloy mini cylinder,the correct order is:MALD-32X100-FA.

安装尺寸/Install dimension

Φ16~Φ63

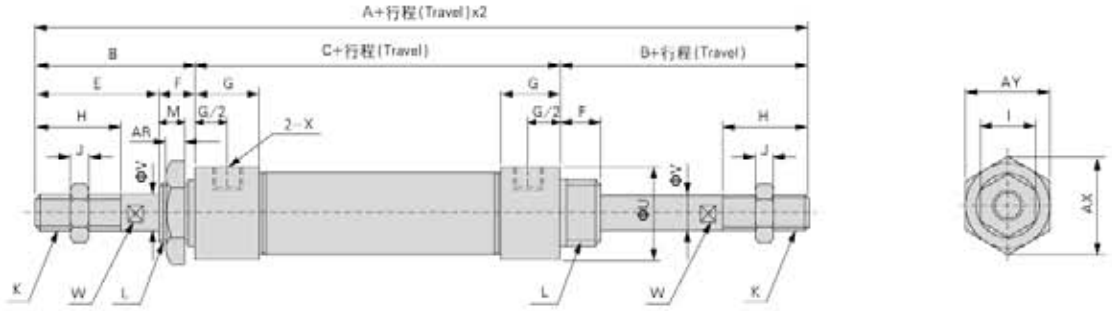

内径/符号(Bore/Symbol)	A	B	C	E	F	G	H	I	J	K	L	M	U	V	W	X	AR	AX	AY
16	136	38	60	21	16	10	18	10	4	M6x1.0	M16x1.5	10	23	6	5	M5	7	27	24
20	150	40	70	28	12	16	20	12	5	M8x1.25	M22x1.5	10	29	8	6	PT1/8	7	33	29
25	158	44	70	30	14	16	22	17	6	M10x1.25	M22x1.5	12	34	10	8	PT1/8	7	33	29
32	158	44	70	30	14	16	22	17	6	M10x1.25	M24x2.0	12	39.5	12	10	PT1/8	8	37	32
40	184	46	92	32	14	22	24	19	7	M12x1.25	M30x2.0	12	49.5	16	14	PT1/4	9	47	41
50	198	62	94	32	20	22	24	23	8	M14x1.5	M36x2.0	15	59	16	14	PT1/4	11	53	47
63	198	62	94	32	20	22	24	23	8	M14x1.5	M36x2.0	15	72	16	14	PT1/4	11	53	47

MALJ系列/SERIES

产品特性/Product features

免润滑/Free of lubrication

采用含油轴承，使活塞杆无需加油润滑。
Oil bearing is adopted so the piston rod do not need to be lubricated.

耐 久 性/Durable

气缸本体、前后盖经过本色阳极氧化处理，不仅具有耐磨性、耐腐蚀性及耐久性，而且更显外观小巧、精美。
The surface treatment of end cap and cylinder body are anodize not only have abrasive resistance,corrosion resistance,durable ,but also very delicate and nice.

耐高温性/High temperature available

可采用耐高温密封材料，使气缸在150摄氏度高温条件下正常工作(客户需向本公司订作)。
Adopted of special sealing material ,the cylinder can work normally at 150 degree (user should order it from us).

安装型式多样/Various mounting type

多种安装附件供客户选择。
Various mounting accessories are supplied.

行程可调性/Adjustable travel

活塞杆端配以可调螺母，使气缸在其行程范围内实现可调。
Adjustable screw nut on the piston rod ,so as to make the cylinder with adjustable travel.



符 号/Symbol

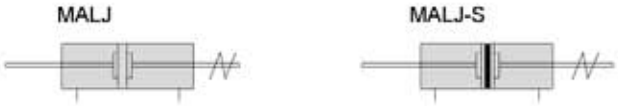

规 格/Specification

内径/Bore (mm)	16	20	25	32	40
动作型式/Action type	复动型/Double action				
工作介质/Work medium	空气/Filtered air				
固定型式/Mounting type	基本型/Basic type, FA LB				
使用压力范围/Operation pressure range(Kgf/cm²)	1～9.0				
保证耐压力/Proof pressure(Kgf/cm²)	13.5				
使用温度范围/Available temperature ℃	0～70				
使用速度范围/Operation speed (mm/s)	30～800				
接管口径/Port size	M5	PT1/8			PT1/4

行 程/Travel

内径/Bore(mm)	标准行程 / Standard travel									最大行程/Max travel	容许行程/Available travel
16	25	50	75	100	125	150				200	300
20	25	50	75	100	125	150	175	200		200	300
25	25	50	75	100	125	150	175	200	250	250	300
32	25	50	75	100	125	150	175	200	250	250	300
40	25	50	75	100	125	150	175	200	250	250	300

※ 特殊行程请与本公司联系/Special travel should checked with our factory.

MALJ系列/SERIES

订购码/Ordering code

MALJ — 20 X 50 30 — S — LB

- MALJ：系列代号/Magnet code
  - MALJ：复动可调型
  - MALJ：Double action and adjustable
- 20：缸 径/Bore
- 50：行 程/Travel
- 30：调整行程 Adjustable travel
  - 25：25mm
  - 50：50mm
  - 75：75mm
- S：感应磁石/Magnet
  - 空白：不附磁
  - Blank：Without magnet
  - S：附磁石
  - S：With magnet
- LB：固定型式/Mounting type
  - (空白) (Blank)
  - LB
  - FA

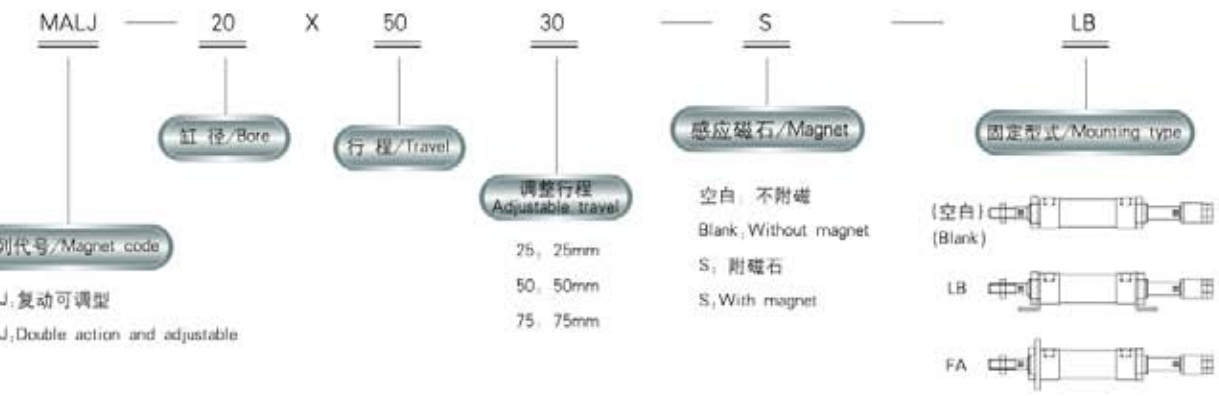

举例/Sample

1) 欲订购缸径为40mm，行程为50mm，调整行程为30mm，采用LB型固定方式，附磁石的双轴复动可调型铝合金迷你气缸，其正确的订购码代号为：MALJ-40X50-30-S-LB。

1) If user need bore 40mm and 50mm travel,LB foot mounting type ,with magnet,two rod double action with 30mm adjustable travel aluminium alloy mini cylinder,the correct order is:MALJ-40X50-30-S-LB.

2) 欲订购缸径为32mm，行程为100mm，调整行程为30mm，采用FA型固定方式，不附磁石的双轴复动可调型铝合金迷你气缸，其正确的订购码代号为：MALJ-32X100-30-FA。

2) If user need bore 32mm and 100mm travel,30mm adjustable travel FA flange mounting type,two rod double action aluminium alloy mini cylinder,the correct order is:MALJ-32X100-30-FA.

安装尺寸/Install dimension

Φ16～Φ40

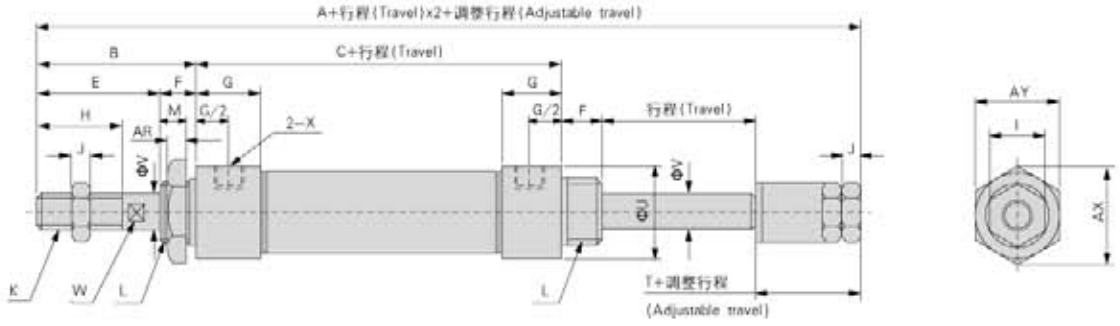

内径/符号(Bore/Symbol)	A	B	C	E	F	G	H	I	J	K	L	M	T	U	V	W	X	AR	AX	AY
16	136	38	60	21	16	10	18	10	4	M6x1.0	M16x1.5	10	17	23	6	5	M5	7	27	24
20	147	40	70	28	12	16	20	12	5	M8x1.25	M22x1.5	10	19	29	8	6	PT1/8	7	33	29
25	155	44	70	30	14	16	22	17	6	M10x1.25	M22x1.5	12	21	34	10	8	PT1/8	7	33	29
32	155	44	70	30	14	16	22	17	6	M10x1.25	M24x2.0	12	21	39.5	12	10	PT1/8	8	37	32
40	180	46	92	32	14	22	24	19	7	M12x1.25	M30x2.0	12	21	49.5	16	14	PT1/4	9	47	41

安装附件/Mounting kits

订购码/Ordering code



附件材质/Accessories material

LB 支架/Foot mount	低碳钢/Low carbon steel
FA 支架/Foot mount	低碳钢/Low carbon steel
SDB 支架/Foot mount	低碳钢/Low carbon steel

附件尺寸/Mounting kits size

FA 型/Series

Φ16~Φ25

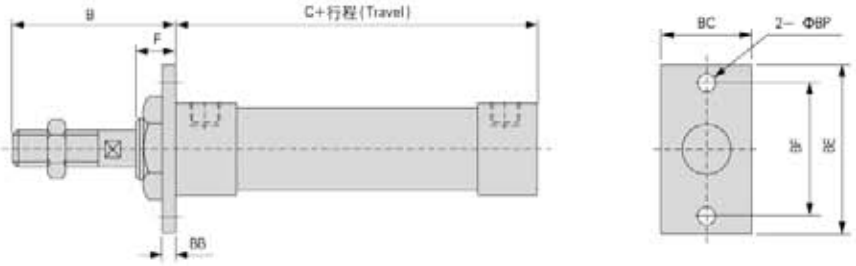

Φ32~Φ40

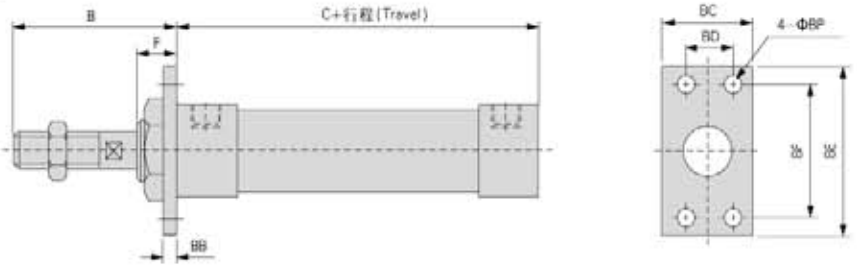

行 程/Travel

内径/符号 (bore/symbol)	B	B (MAL系列/Series)	C (MSAL系列/Series)		BB	BC	BD	BE	BF	BP	F
			0~50	51~100							
16	38	60	60	85	3.2	26	–	52	40	5.5	16
20	40	70	70	95	4	38	–	64	50	6.5	12
25	44	70	70	95	4	38	–	64	50	6.5	14
32	44	70	70	95	4	47	33	72	58	6.5	14
40	46	92	92	117	4	50	36	84	70	6.5	14

安装附件/Mounting kits

LB型/LB Series

Φ16~Φ40

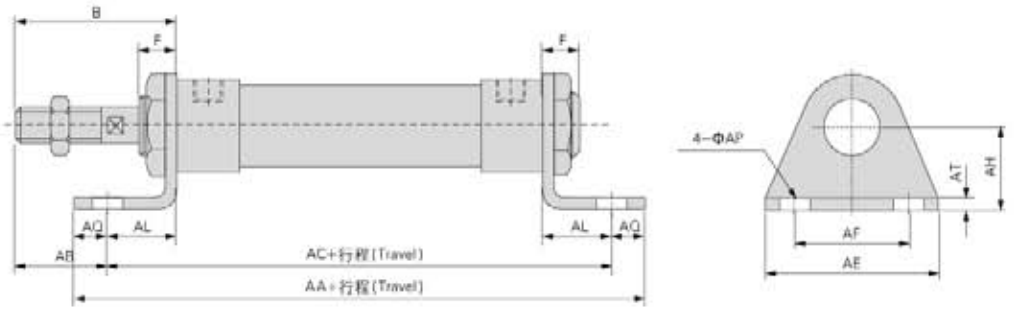

内径/符号(bore/symbol)	B	F	AA (MAL系列/Series)	AA(MSAL系列/Series)		AB	AC (MAL系列/Series)	AC(MSAL系列/Series)		AE	AF	AL	AQ	AP	AT	AH
				0-50	51-100			0-50	51-100							
16	38	16	98	98	123	25	86	86	111	44	32	13	6	5.5	3	20
20	40	12	116	116	141	25	100	100	125	54	40	15	8	6.5	3	25
25	44	14	116	116	141	29	100	100	125	54	40	15	8	6.5	3	25
32	44	14	136	136	161	19	120	120	145	59	45	25	8	6.5	4	32
40	46	14	158	158	183	21	142	142	167	64	50	25	8	6.5	4.5	36

SDB型/SDB SERIES

Φ16~Φ40

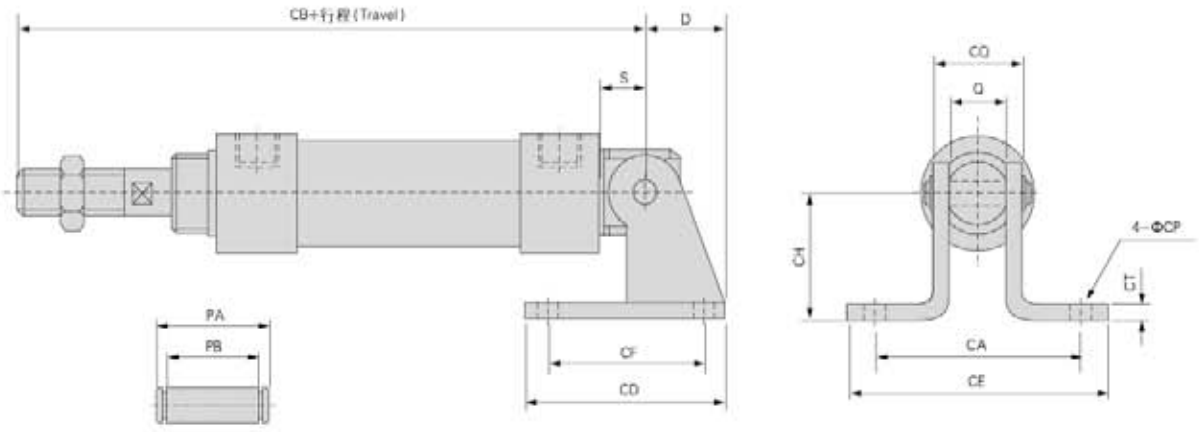

内径/符号(Bore/Symbol)	D	S	Q	CA	CB (MAL系列/Series)	CB(MSAL系列/Series)		CD	CE	CF	CH	CT	CP	CQ	PA	PB
						0-50	51-100									
16	16	9	12	–	107	107	132	23	–	12	20	2.3	5.5	16.5	21	17
20	21	12	16	51	122	122	147	48	67	32	32	3	6.5	22	27	22.5
25	21	12	16	51	126	126	151	48	67	32	32	3	6.5	22	27	22.5
32	27	15	16	51	129	129	154	52	67	36	36	4	6.5	24	30	24.5
40	27	15	20	55	153	153	178	56	71	40	40	4	6.5	28	34	28.5

联接附件/Connector kits

接头尺寸/Joint size

Y接头/Y Joint

Φ16

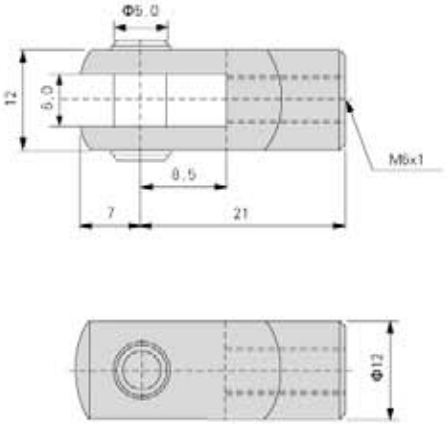

I接头/I Joint

Φ16

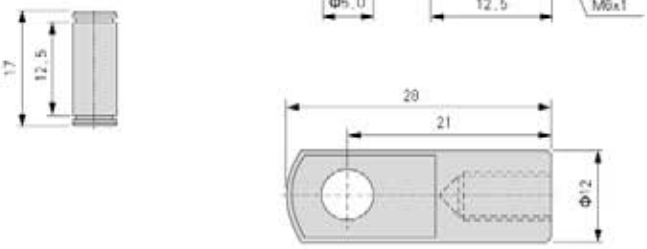

Φ20~Φ40

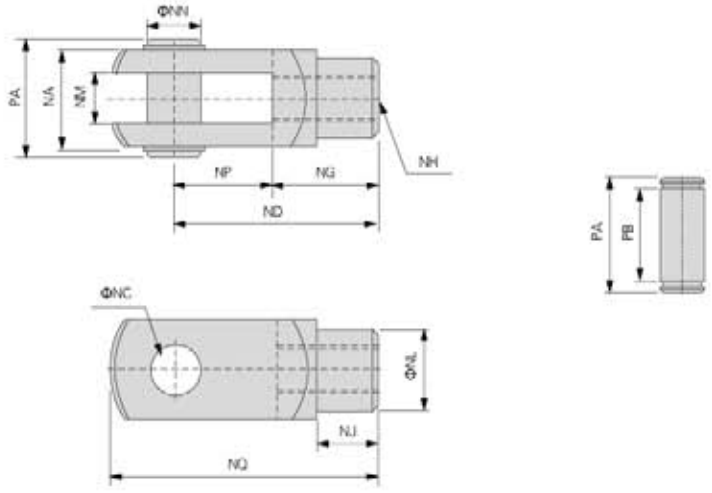

Φ20~Φ40

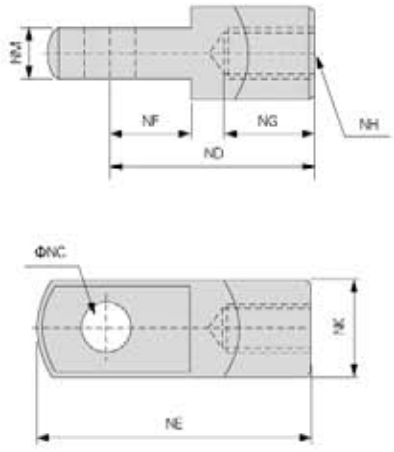

行 程/Travel

内径/符号 (Bore/Symbol)	NA	NC	ND	NE	NF	NG	NH	NJ	NK	NL	NM	NN	NP	NQ	PA	PB
20	16	8	30	40	11	15	M8 x 1.25	10	16	14	8	8	15	40	21	16.5
25	19	10	40	52	15	20	M10 x 1.25	12	20	18	10	10	20	52	25	19.5
32	19	10	40	52	15	20	M10 x 1.25	12	20	18	10	10	20	52	25	19.5
40	25.4	10	45	57	15	25	M12 x 1.25	15	24	23	14	10	20	57	31	26

联接附件/Connector kits

鱼眼接头/Ball joint ends

Φ20~Φ40

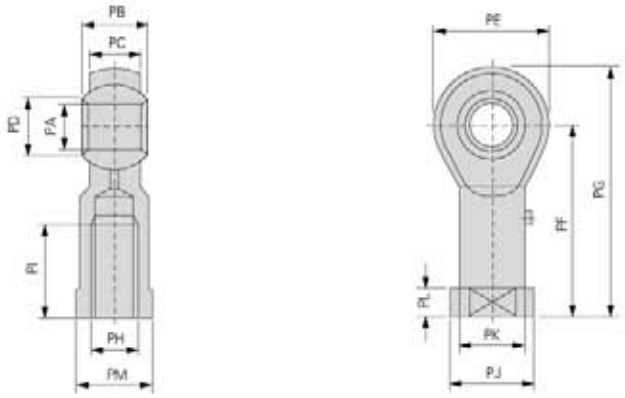

内径/符号(Bore/Symbol)	PA	PB	PC	PD	PE	PF	PG	PH	PI	PJ	PK	PL	PM
20	8	12	9	10.4	22	36	47	M8 x 1.25	17	16	12.5	5	14
25	10	14	11	12.9	26	43	56	M10 x 1.25	21	19	15	6.5	17
32	10	14	11	12.9	26	43	56	M10 x 1.25	21	19	15	6.5	17
40	12	16	12	15.4	30	50	65	M12 x 1.25	24	22	17.5	6.5	19

浮动接头/Self-aligning bearings

Φ20~Φ63

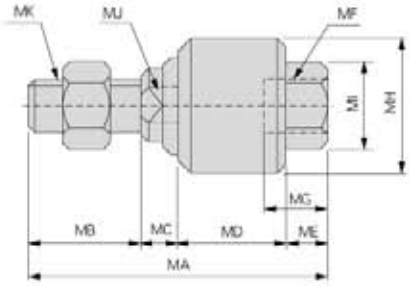

内径/符号(Bore/Symbol)	MA	MB	MC	MD	ME	PH	MG	MH	MI	MJ	MK
20	51	20	6	17	8	M8 x 1.25	12	24	13	8	M8 x 1.25
25	58	22	7	21	8	M10 x 1.25	12	26	17	10	M10 x 1.25
32	58	22	7	21	8	M10 x 1.25	12	26	17	10	M10 x 1.25
40	58	22	8	21	7	M12 x 1.25	12	28	19	12	M12 x 1.25
50	70	22.5	7	29.5	11	M14 x 1.5	13	35	22	15	M14 x 1.5
63	70	22.5	7	29.5	11	M14 x 1.5	13	35	22	15	M14 x 1.5

感应开关/Sensor switch

相关尺寸/Specification

CS1-F

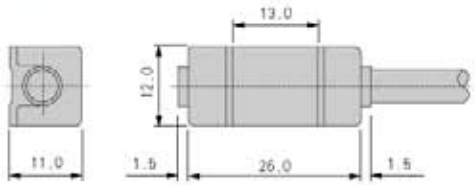



CS1-U

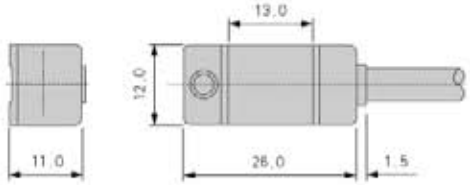

CS1-S

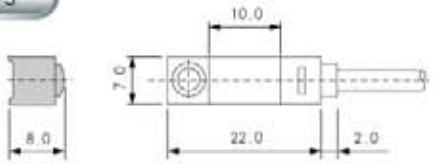

接线图/Wiring diagram

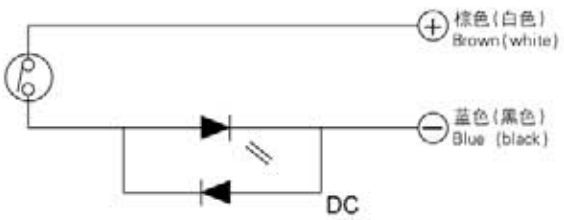

规　格/Specification

感应开关型式 Model	使用电压范围 Available voltage	使用电流范围 Available current	反应时间 Reflect time	抗冲击性 Anti concussion	耐震程度 Seismic degree	使用温度范围 Available temperature	保护等级 Protect rate	指示灯 Light	电线长度 Wire length	寿命 Life time
CS1-F CS1-U	DC:5V-240V AC:5V-380V	DC:5-60mA AC:5-50mA	最大1ms MAX 1ms	300m/S² (30G)	10-55Hz	0-60℃	IP-67	LED	2M	至少500万次 At least 5 million times
CS1-S	DC:5V-240V AC:5V-380V	DC:5-50mA AC:5-40mA	最大1ms MAX 1ms	300m/S² (30G)	10-55Hz	0-60℃	IP-67	LED	2M	至少500万次 At least 5 million times

订购码/Ordering code

CS1 —— U

型 号/Model

CS1气缸用磁性开关
CS1 Sensor switch

型 式/Type

F：向前型/Front type
U：向上型/Up type
S：超小型/Super small

BL —— 40

型 号/Model

BL：不锈钢迷你气缸
感应开关固定带
BL:Sensor switch mounting
belt used for stainless steel

气缸内径/Bore

16：16mm
20：20mm
25：25mm
32：32mm
40：40mm
50：50mm
63：63mm

举例/Sample

1）欲订购与铝合金迷你气缸配套，型式为向前型的磁感应开关。其正确的订购码代号为：CS1-F。
If user needs front type magnet sensor switch which will be used for aluminium alloy mini cylinder the correct code is:CS1-F.

2）欲订购与缸径为40mm的铝合金迷你气缸配套的磁感应开关固定带，其正确的订购码代号为：BL-40。
If user need magnet sensor switch fixed base which will be used for bore 40mm aluminium alloy mini cylinder the correct code is:BL-40.

安装与使用/Install&use

- 工作中负载有变化，应选用输出力充裕的气缸，在高温条件下，应选用相应的耐高温气缸。
  The load would be changed during working process,so the cylinder with enough output force should be chosen ,on the case of high temperature , operator is suggested to choose the cylinder with high-temp seals!
- 气缸配管前，必须清除管道内的杂物，防止杂物进入气缸内。
  Before put in the air tube on the cylinder ,the inside surface of the pipe must be cleaned .In order to prevent sundries from entering into cylinder.
- 气缸使用介质应经过40μm以上滤芯过滤后方可使用。
  The medium used by cylinder can not be put into use until it has pass filtering by certain filtering element above 40um.
- 在低温环境下，应采取抗冻措施，防止系统的水分结冰。
  Under condition of low temperature ,the anti-freezing measure must be adopted ,so as to avoid freezing of engineering system.
- 气缸在工作过程中应尽可能避免受侧向负载，以维持气缸的正常工作和使用寿命。
  During the working process ,the cylinder should be avoid side-load,in order to maintain normal working and assure the lifetime of the cylinder.
- 气缸拆下长时间不使用，要注意表面防锈，进排气口应加防尘堵塞帽。
  If the cylinder has been out of work for a long time ,operator should take notice of surface rustproof,the dust proof cap is suggested to be added at air in and out hole .

气缸理论出力计算方法／Formula for cylinder output power

$$F = P \times A - Fo$$

- Fo：弹簧复位力/Spring return power (Kgf)
- A：活塞受压面积/Piston pressed area (cm^2)
- P：工作压力/Working pressure (Kgf/cm^2)
- F：气缸理论出力/The output power of cylinder (Kgf)

气缸理论出力表/Table for theoretic power of a cylinder

气缸内径 Cylinder ID	活塞杆外径 Outdiameter of piston rod	动作型式/Action type		受压面积 Pressure area(cm²)	空气压力/Air pressure(Kgf/cm²) 1.0	2.0	3.0	4.0	5.0	6.0	7.0
12	6	压出单动/Single action(rear spring)		1.13	–	0.70	1.83	2.96	4.09	5.22	6.35
		引入单动/Single action(front spring)		0.85	–	0.14	0.99	1.84	2.69	3.54	4.39
		复动型 Double action	压侧/Push side	1.13	–	2.26	3.39	4.52	5.65	6.78	7.91
			拉侧/Pull side	0.85	–	1.70	2.55	3.40	4.25	5.10	5.95
16	8	压出单动/Single action(rear spring)		2.01	–	1.36	3.37	5.38	7.39	9.40	11.41
		引入单动/Single action(front spring)		1.51	–	0.80	2.53	4.26	5.99	7.72	9.45
		复动型 Double action	压侧/Push side	2.01	–	4.02	6.03	8.04	10.05	12.06	14.07
			拉侧/Pull side	1.51	–	3.02	4.53	6.04	7.55	9.06	10.57
20	10	压出单动/Single action(rear spring)		3.14	–	2.87	6.01	9.15	12.29	15.43	18.57
		引入单动/Single action(front spring)		2.35	–	1.87	4.51	7.15	9.79	12.43	15.07
		复动型 Double action	压侧/Push side	3.14	–	6.28	9.42	12.56	15.70	18.84	21.98
			拉侧/Pull side	2.35	–	4.70	7.05	9.40	11.75	14.10	16.45
25	10	压出单动/Single action(rear spring)		4.90	–	5.80	10.70	15.60	20.50	25.40	30.30
		引入单动/Single action(front spring)		4.12	–	4.24	8.36	12.48	16.60	20.72	24.84
		复动型 Double action	压侧/Push side	4.90	–	9.80	14.70	19.60	24.50	29.40	34.30
			拉侧/Pull side	4.12	–	8.24	12.36	16.48	20.60	24.72	28.87
32	12	压出单动/Single action(rear spring)		8.04	–	11.21	19.25	27.29	35.33	43.37	51.41
		引入单动/Single action(front spring)		6.90	–	8.93	15.83	22.73	29.63	36.53	43.43
		复动型 Double action	压侧/Push side	8.04	–	16.08	24.12	32.16	40.20	48.24	56.28
			拉侧/Pull side	6.90	–	13.80	20.70	27.60	34.50	41.40	48.30
40	12	压出单动/Single action(rear spring)		12.56	12.56	20.08	32.64	45.20	57.76	70.32	82.88
		引入单动/Single action(front spring)		11.43	11.43	16.06	26.61	37.16	47.71	58.26	68.81
		复动型 Double action	压侧/Push side	12.56	12.56	25.12	37.68	50.24	62.80	75.36	87.92
			拉侧/Pull side	11.43	11.43	22.86	34.29	45.72	57.15	68.58	80.01
50	16	复动型 Double action	压侧/Push side	19.63	19.63	39.26	58.89	78.52	98.15	117.78	137.41
			拉侧/Pull side	17.62	17.62	35.24	52.86	70.48	88.10	105.72	123.34
63	16	复动型 Double action	压侧/Push side	31.17	31.17	62.34	93.51	124.68	155.85	187.02	218.19
			拉侧/Pull side	29.16	29.16	58.32	87.48	116.64	145.80	174.96	204.12
80	20	复动型 Double action	压侧/Push side	50.26	50.26	100.52	150.78	201.04	251.30	301.56	351.82
			拉侧/Pull side	47.12	47.12	94.24	141.36	188.48	235.60	282.72	329.84
100	20	复动型 Double action	压侧/Push side	78.53	78.53	157.06	235.59	314.12	392.65	471.18	549.71
			拉侧/Pull side	75.39	75.39	150.78	226.17	301.56	376.95	452.34	527.73
125	25	复动型 Double action	压侧/Push side	122.66	122.66	245.32	367.98	490.64	613.30	735.96	858.62
			拉侧/Pull side	117.76	117.76	235.52	353.28	471.04	588.80	706.56	824.32

规 格/Specification

内径/Bore (mm)		12	16	20	25	32	40	50	63	80	100	125
动作型式/Action type		复动型/Double action										
工作介质/Work medium		空气/Filtered air										
使用压力范围/Operation pressure range(Kgf/cm²)	复动型/Double action	1～9.0										
	单动型/Single action	2～9.0						–				
保证耐压力/Proof pressure(Kgf/cm²)		13.5										
使用温度范围/Available temperature °C		–5～70										
使用速度范围 Operation speed (mm/s)	复动型/Double action	30～500						30～350		30～250		
	单动型/Single action	100～500										
缓冲型式/Cushioning		固定式缓冲/Fixed bumper										
接管口径/Port size		M5				G1/8						G1/4
固定型式/Mounting type		FA				LB		FA	CA	CB		

ADN系列/SERIES

产品特性/Product features



薄 且 轻/Thin and light

在保持既有动作精度及产品使用寿命下，其全长仅为一般气缸的1/2～1/3，发挥既薄且轻的特性/With the same working precision and lifetime ,the total length saving 50% to 70%.More thin and light.

易 安 装/Easy mounting

使用埋入式的安装方式，不需任何配件达到节省空间的要求/Female thread or through hole on the cylinder, easy mounting without more mounting kits so as to save the space.

易 维 修/Easy repair

采用简易的组装方式进行设计，方便装拆及维修/Assembly process simply,easy to disassembly and repair.

磁性开关/Sensor switch mounting easily

在本体外围预留装配槽，使磁性开关在安装固定及位置调整时，均极其简单/Sensor slots on the cylinder ,easy to install the sensor and adjust the sensor position.

订购码/Ordering code

ADN — S — 20 X 30 — B — LB

- ADN — 型号/Model
  - ADN：标准复动型
  - ADN Standard double action
- S — 感应磁石/Magnet
  - S：附磁石
  - S:With magnet
  - 空白：不附磁
  - Blank：without magnet
- 20 — 缸 径/Bore
- 30 — 行 程/Travel
- B — 牙型/Thread code
  - 空白：内牙
  - Blank：Female thread
  - B：外牙/Male thread
  - N：无牙/Without thread
- LB — 固定型式/Mounting type
  - 空白：基本型/Basic
  - LB：脚架安装/Foot mount
  - FA/FB：法兰安装/Flange mount
  - CA：单耳环安装/Swivel mount
  - CB：双耳环安装/Clevis mount

※ 无牙轴心长度与内牙相同/Female thread and without thread have the same length of the piston rod.

举例/Sample

1)欲订购缸径为50mm，行程为30mm，附磁石，活塞杆牙型为外牙使用前法兰安装型式的ADN复动型紧凑型气缸，其正确的订购码代号为：ADNS 50X30-B-FA。
If user need bore 50mm and 30mm travel,with magnet,male thread piston rod,front flange mounting type,double action ADN standard compact cylinder the correct order is:ADNS 50X30-B-FA.

2)欲订购缸径为20mm，行程为25mm，不附磁石，活塞杆牙型为无牙使用单耳环安装型式的ADN复动型紧凑型气缸，其正确的定购码代号为：ADN 20X25-N-CA
If user need bore 20mm and 25mm travel,piston rod without thread,CA mounting type,double action compact cylinder the correct order is:ADN 20X25-N-CA.

内部结构及主要零件材质/Inner structure and material list for main parts

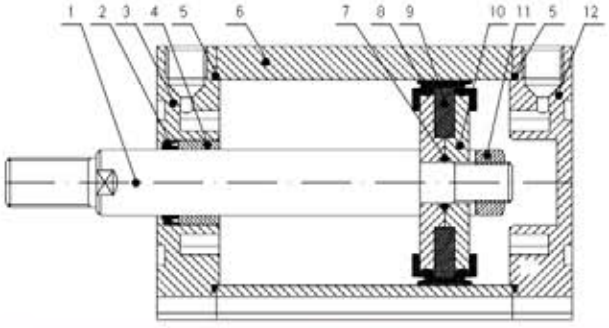

序号/No	名称/Name	材质/Material	序号/No	名称/Name	材质/Material
1	活塞杆/Piston rod	碳钢/Carbon steel	7	活塞杆O型圈/O-ring for piston rod	NBR
2	防尘圈/Anti dust seals	NBR	8	组合活塞圈/	TPU
3	前端盖/Front cover	铝合金/Aluminium alloy	9	磁环/Magnet	铁氧体/Ferrite
4	含油轴承/Oil bearing	铜基粉末合金/Sintered bronze	10	活塞/Piston	铝合金/Aluminium alloy
5	管壁O型圈/O-ring for front cover	NBR	11	活塞杆螺帽/Nut for piston rod	碳钢/Carbon steel
6	缸筒/Tube	铝合金/Aluminium alloy	12	后端盖/Back cover	铝合金/Aluminium alloy

行 程/Travel

内径/Bore (mm)		12 16	20	25		32 40 50 63	80 100 125
复动型 Double action	不附磁 Without magnet	5—50mm 每5mm一级 5mm Per grade	5—80mm 每5mm一级 5mm Per grade	5—90mm 每5mm一级 5mm Per grade	100—200mm 每10mm一级 10mm per grade	5—50mm 每5mm一级 5mm Per grade	5—200mm 每10mm一级 10mm Per grade
	附磁型/Magnet	5—50mm 每5mm一级 5mm Per grade	5—80mm 每5mm一级 5mm Per grade	5—90mm 每5mm一级 5mm Per grade	100—200mm 每10mm一级 10mm per grade	5—50mm 每5mm一级 5mm Per grade	5—200mm 每10mm一级 10mm Per grade
最大行程/Max travel		200mm	200mm	200mm		400mm	500mm

安装尺寸/Install dimension

Φ12~Φ25

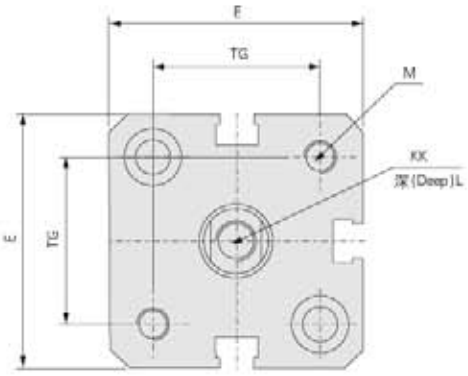

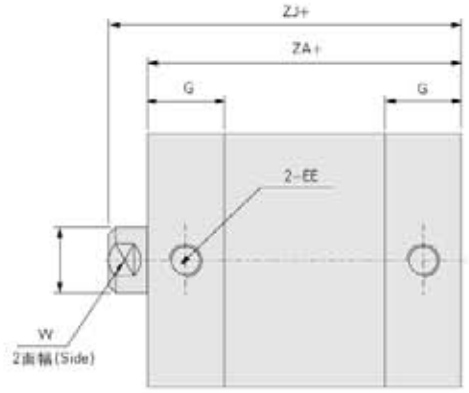

Φ32~Φ100

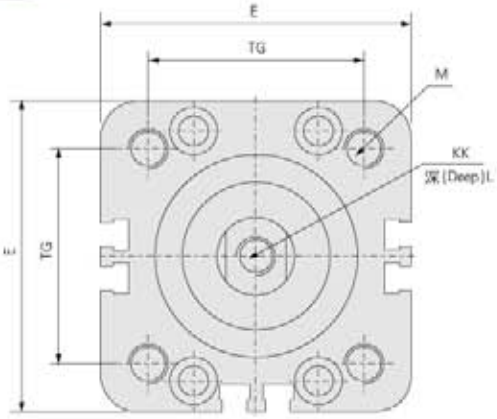

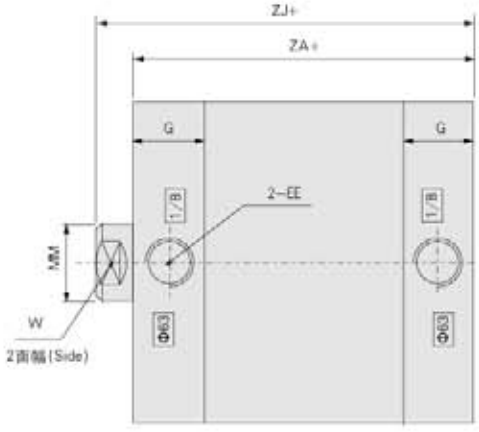

内径/符号(Bore/Symbol)	E	G	EE	MM	M	KK	L	TG	W	ZA	ZJ
12	27.5	10.5	M5	6	M4	M3	8	16	5	35	40
16	29	11	M5	8	M4	M4	10	18	7	35	40
20	35.5	12	M5	10	M5	M6	14	22	8	37	43
25	39.5	12	M5	10	M5	M6	14	26	8	39	45
32	47.5	15	G1/8	12	M6	M8	16	32.5	10	45	50
40	56.5	14.5	G1/8	12	M6	M8	16	38	10	45	51
50	66.5	14.5	G1/8	16	M8	M10	20	46.5	14	45	53
63	79.5	14.5	G1/8	16	M8	M10	20	56.5	14	50	57
80	100	16	G1/8	20	M10	M12	20	72	17	55	63
100	120	19.5	G1/8	20	M10	M12	20	89	17	67	76

外牙尺寸/Male thread dimension

Φ12~Φ25

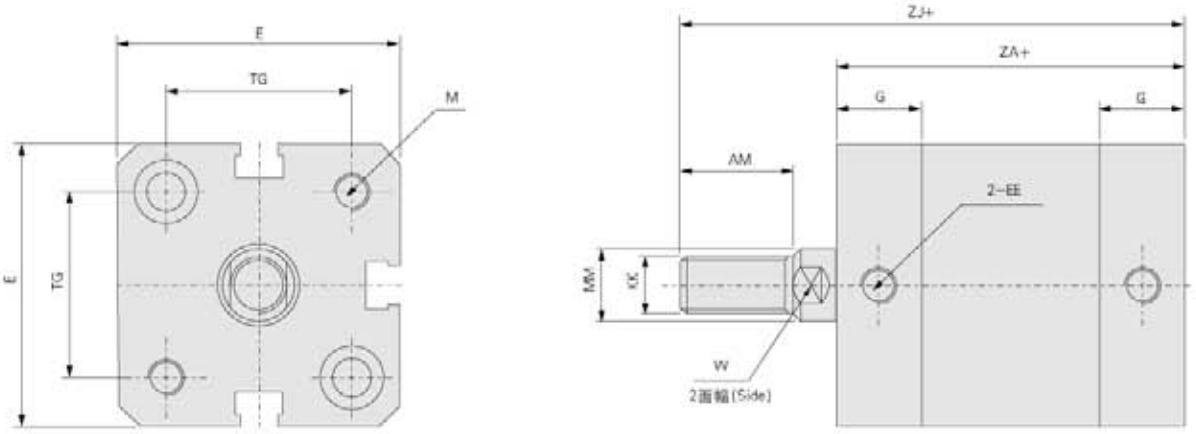

Φ32~Φ100

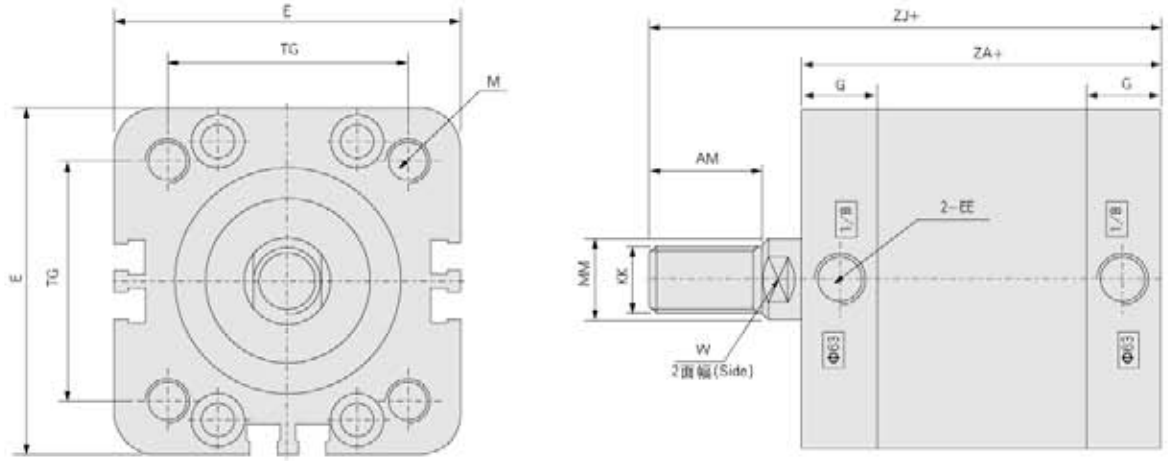

内径/符号(Bore/Symbol)	AM	E	G	EE	MM	M	KK	TG	W	ZA	ZJ
12	10	27.5	10.5	M5	6	M4	M5	16	5	35	50
16	12	29	11	M5	8	M4	M6	18	7	35	52
20	16	35.5	12	M5	10	M5	M8	22	8	37	59
25	16	39.5	12	M5	10	M5	M8	26	8	39	61
32	19	47.5	15	G1/8	12	M6	M10x1.25	32.5	10	45	69
40	19	56.5	14.5	G1/8	12	M6	M10x1.25	38	10	45	70
50	22	66.5	14.5	G1/8	16	M8	M12x1.25	46.5	14	45	75
63	22	79.5	14.5	G1/8	16	M8	M12x1.25	56.5	14	50	79
80	28	100	16	G1/8	20	M10	M16x1.5	72	17	55	91
100	28	120	19.5	G1/8	20	M10	M16x1.5	89	17	67	104

ADND系列/SERIES

产品特性/Product features

薄 且 轻/Thin and light

在保持既有动作精度及产品使用寿命下，其全长仅为一般气缸的1/2～1/3。发挥既薄且轻的特性。

With the same working precision and lifetime ,the total length saving 50% to 70%.More thin and light.

易 安 装/Easy mounting

使用埋入式的安装方式，不需任何配件达到节省空间的要求

Female thread or through hole on the cylinder, easy mounting without more mounting kits so as to save the space.

易 维 修/Easy repair

采用简易的组装方式进行设计，方便装拆及维修。

Assembly process simply,easy to disassembly and repair.

磁性开关/Sensor switch mounting easily

在本体外围预留装配槽，使磁性开关在安装固定及位置调整时，均极其简单。

Sensor slots on the cylinder ,easy to install the sensor and adjust the sensor position.



订购码/Ordering code

ADND — S — 20 X 30 — B — LB

- ADND — 型号/Model
  - ADN：双轴复动型
  - ADN：Two piston rod double action
- S — 感应磁石/Magnet
  - S：附磁石
  - S：With magnet
  - 空白：不附磁
  - Blank：Without magnet
- 20 — 缸 径/Bore
- 30 — 行程/Travel
- B — 牙型/Thread code
  - 空白：内牙
  - Blank：female thread
  - B：外牙/Male thread
  - N：无牙/Without thread
- LB — 固定型式/Mounting type
  - 空白：基本型/Basic
  - LB：脚架安装/Foot mount
  - FA：前法兰安装
  - Front flange mount
  - FB：后法兰安装
  - Rear flange mount

※ 无牙轴心长度与内牙相同/Female thread and without thread have the same length of the piston rod.

举例/Sample

1)欲订购缸径为20mm，行程为30mm,附磁石，活塞杆牙型为内牙使用前法兰安装型式的ADN双轴复动型紧凑型气缸，其正确的订购码代号为：ADND-20X30-FA。

If user need bore 20mm and 30mm travel,with magnet ,piston rod with female thread,front flange mounting type,ADN double action compact cylinder the correct order is:ADND-20X30-FA.

2)欲订购缸径为63mm，行程为25mm,不附磁石，活塞杆牙型为外牙使用单耳环安装型式的ADN双轴复动型紧凑型气缸，其正确的定购码代号为：ADND-63X25-B-CA。

If user need bore 63mm and 25mm travel,piston rod with male thread,CA mounting type,two rod double action compact cylinder the correct order is:ADND-63X25-B-CA.

规 格/Specification

内径/Bore (mm)	12	16	20	25	32	40	50	63	80	100	125
动作型式/Action type	复动型/Double action										
工作介质/Work medium	空气/Filtered air										
使用压力范围/Operation pressure range(Kgf/cm²)	1～9.0										
保证耐压力/Proof pressure(Kgf/cm²)	13.5										
使用温度范围/Available temperature °C	-5～70										
使用速度范围/Operation speed (mm/s)	30～500						30～350		30～250		
缓冲型式/Cushioning	固定式缓冲/Fixed bumper										
接管口径/Port size	M5				G1/8						G1/4
固定型式/Mounting type	FA				LB FA						

行 程/Travel

内径/Bore (mm)	12	16	20	25	32	40	50	63	80	100	125
不附磁/Without magnet	1～300mm				1～400mm			1～500mm			
附磁型/Magnet	1～300mm				1～400mm			1～500mm			
最大行程/Max travel	300mm				400mm			500mm			

外牙尺寸/Male thread dimension

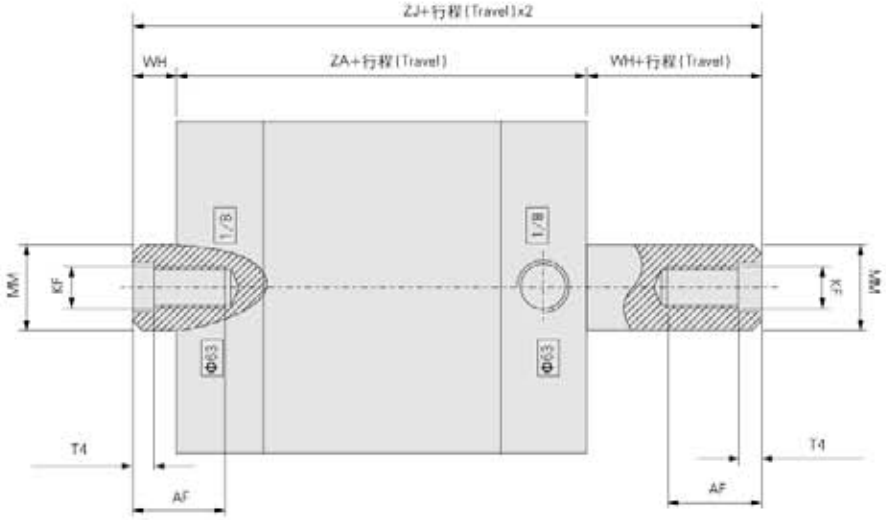

内径/符号(Bore/Symbol)	AF	AM	T4	MM	KF	KK	WH	ZA	ZJ
12	8	10	1.5	6	M3	M5	5	35	45
16	10	12	15	8	M4	M6	5	35	45
20	14	16	2.6	10	M6	M8	6	37	49
25	14	16	2.6	10	M6	M8	6	39	51
32	16	19	3.3	12	M8	M10x1.25	5	45	55
40	16	19	3.3	12	M8	M10x1.25	6	45	57
50	20	22	4.7	16	M10	M12x1.25	8	45	61
63	20	22	4.7	16	M10	M12x1.25	7	50	64
80	20	28	6.1	20	M12	M16x1.5	8	55	70
100	20	28	6.1	20	M12	M16x1.5	9	67	85

ADNJ系列/SERIES

产品特性/Product features

薄 且 轻/Thin and light

在保持既有动作精度及产品使用寿命下，其全长仅为一般气缸的1/2～1/3。发挥既薄且轻的特性。

With the same working precision and lifetime ,the total length saving 50% to 70%.More thin and light.

易 安 装/Easy mounting

使用埋入式的安装方式，不需任何配件达到节省空间的要求

Female thread or through hole on the cylinder, easy mounting without more mounting kits so as to save the space.

易 维 修/Easy repair

采用简易的组装方式进行设计，方便装拆及维修。

Assembly process simply,easy to disassembly and repair.

磁性开关/Sensor switch mounting easily

在本体外围预留装配槽，使磁性开关在安装固定及位置调整时，均极其简单。

Sensor slots on the cylinder ,easy to install the sensor and adjust the sensor position.



订购码/Ordering code

ADNJ — S — 20 X 30 — B — LB

ADNJ 型号/Model
- ADNJ：双轴复动可调行程型
- ADNJ Two piston rod double action with adjustable travel

S 感应磁石/Magnet
- S：附磁石
- S:With magnet
- 空白：不附磁
- Blank :without magnet

20 缸 径/Bore

30 行 程/Travel

B 牙型/Thread code
- 空白：内牙
- Blank :Female thread
- B：外牙/Male thread
- N：无牙/Without thread

LB 固定型式/Mounting type
- 空白：基本型/Basic
- LB：脚架安装/Foot mount
- FA：前法兰安装
- Front flange mount

※ 无牙轴心长度与内牙相同/Female thread and without thread have the same length of the piston rod.

举例/Sample

1)欲订购缸径为20mm，行程为30mm，调整行程为15mm，附磁石，活塞杆牙型为内牙使用前法兰安装型式的ADN双轴复动可调行程型紧凑型气缸，其正确的订购码代号为：ADNJS-20X30-15-FA。

If user need bore 20mm and 30mm travel, adjustable travel is 15mm, with magnet , piston rod with female thread,front flange mounting type, ADN two rod double action with adjustable travel compact cylinder the correct order is:ADNJS-20X30-15-FA.

2)欲订购缸径为63mm，行程为25mm，调整行程为20mm，不附磁石，活塞杆牙型为外牙的ADN双轴复动可调行程型紧凑型气缸，其正确的定购码代号为：ADNJ-63X25-20-B。

If user need bore 63mm and 25mm travel,adjustable travel is 20mm,piston rod with male thread,two rod double action with adjustable travel compact cylinder the correct order is: ADNJ-63X25-20-B.

规 格/Specification

内径/Bore (mm)	12	16	20	25	32	40	50	63	80	100
动作型式/Action type	复动型/Double action									
工作介质/Work medium	空气/Filtered air									
使用压力范围/Operation pressure range(Kgf/cm²)	1～9.0									
保证耐压力/Proof pressure(Kgf/cm²)	13.5									
使用温度范围/Available temperature ℃	-5～70									
使用速度范围/Operation speed (mm/s)	30～500					30～350		30～250		
缓冲型式/Cushioning	固定式缓冲/Fixed bumper									
接管口径/Port size	M5				G1/8					G1/4
固定型式/Mounting type	FA				LB			FA		

行 程/Travel

内径/Bore (mm)	12 16 20 25	32 40 50	63 80 100
不附磁/Without magnet	1～300mm	1～400mm	1～500mm
附磁型/Magnet	1～300mm	1～400mm	1～500mm
最大行程/Max travel	300mm	400mm	500mm
最大调整行程/Adjustable travel	80mm	100mm	150mm

安装尺寸/Install dimension

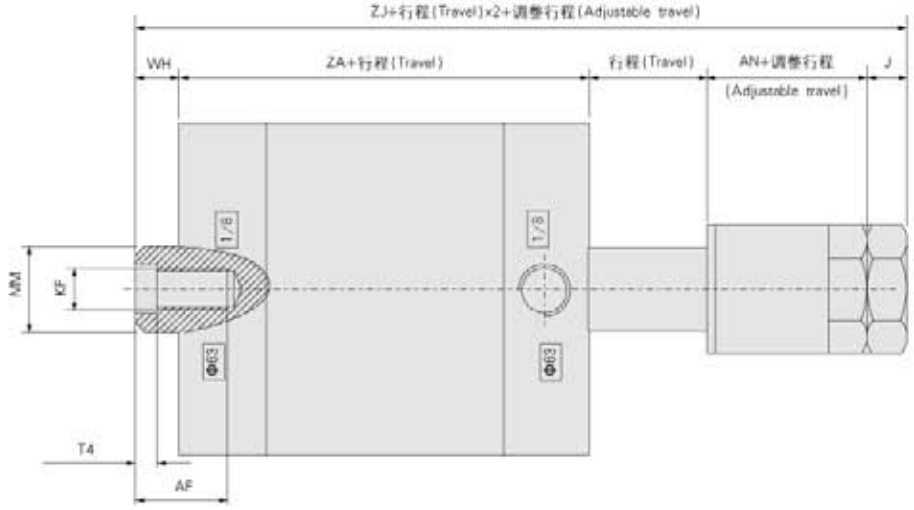

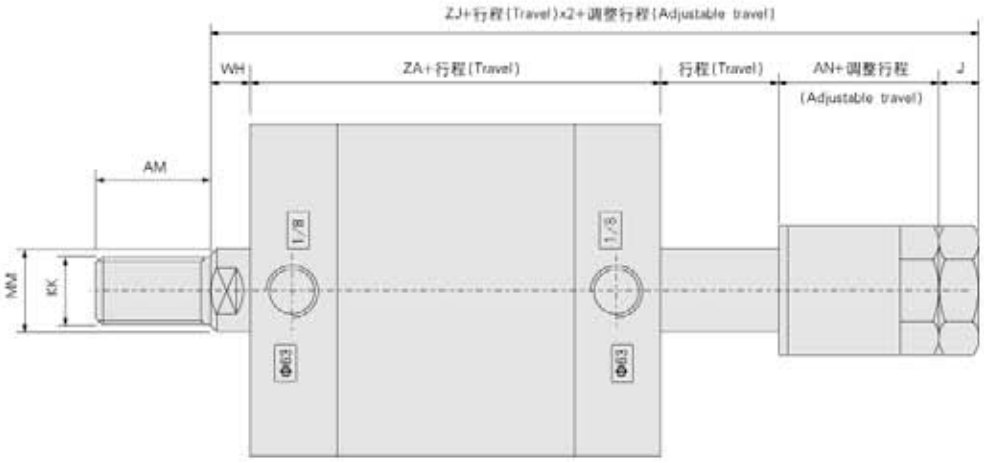

内径/符号(Bore/Symbol)	AF	AM	AN	J	T4	MM	KF	KK	WH	ZA	ZJ
12	8	10	14	4	1.5	6	M3	M5	5	35	58
16	10	12	14	4	1.5	8	M4	M6	5	35	58
20	14	16	17	5	2.6	10	M6	M8	6	37	65
25	14	16	20	5	2.6	10	M6	M8	6	39	70
32	16	19	20	6	3.3	12	M8	M10x1.25	5	45	76
40	16	19	21	6	3.3	12	M8	M10x1.25	6	45	78
50	20	22	22	7	4.7	16	M10	M12x1.25	8	45	82
63	20	22	21	7	4.7	16	M10	M12x1.25	7	50	85
80	20	28	21	8	6.1	20	M12	M16x1.5	8	55	92
100	20	28	22	8	6.1	20	M12	M16x1.5	9	67	106

ADNT系列/SERIES

产品特性/Product features



薄 且 轻/Thin and light

在保持既有动作精度及产品使用寿命下，其全长仅为一般气缸的1/2－1/3。发挥既薄且轻的特性。

With the same working precision and lifetime ,the total length saving 50% to 70%.More thin and light.

易 安 装/Easy mounting

使用埋入式的安装方式，不需任何配件达到节省空间的要求

Female thread or through hole on the cylinder, easy mounting without more mounting kits so as to save the space.

易 维 修/Easy repair

采用简易的组装方式进行设计，方便装拆及维修。

Assembly process simply,easy to disassembly and repair.

磁性开关/Sensor switch mounting easily

在本体外围预留装配槽，使磁性开关在安装固定及位置调整时，均极其简单。

Sensor slots on the cylinder ,easy to install the sensor and adjust the sensor position.

订购码/Ordering code

ADNT — S — 20 X 30 — 30 — B

- ADNT — 型号/Model
  - ADNT：多位置系列
  - ADNT：Multi position series
- S — 感应磁石/Magnet
  - S：附磁石
  - S：With magnet
  - 空白：不附磁
  - Blank：Without magnet
- 20 — 缸 径/Bore
- 30 — 第一行程 First travel
- 30 — 第二行程 Second travel
- B — 牙型/Thread code
  - 空白：内牙
  - Blank：Female thread
  - B：外牙/Male thread
  - N：无牙/Without thread

※ 无牙轴心长度与内牙相同/Female thread and without thread have the same length of the piston rod.

举例/Sample

1)欲订购缸径为20mm，第一行程为30mm，第二行程为15mm，附磁石，活塞杆牙型为内牙的ADN复动多位置型紧凑型气缸，其正确的订购码代号为：ADNTS－20X30X15。

If user need bore 20mm and the first travel is 30mm ,the second travel is 15mm,with magnet ,piston rod with female thread,ADN multi position double action compact cylinder the correct order is: ADNTS-20X30X15.

2)欲订购缸径为63mm，第一行程为25mm，第二行程为20mm，不附磁石，活塞杆牙型为外牙的ADN复动多位置紧凑型气缸，其正确的定购码代号为：ADNT－63X25X20－B。

If user need bore 63mm and the first travel is 25mm,the second travel is 20mm,piston rod with male thread,multi position double action compact cylinder the correct order is: ADNT-63X25X20-B.

规 格/Specification

内径/Bore (mm)	12	16	20	25	32	40	50	63	80	100
动作型式/Action type	复动型/Double action									
工作介质/Aork medium	空气/Filtered air									
使用压力范围/Operation pressure range(Kgf/cm²)	1～9.0									
保证耐压力/Proof pressure(Kgf/cm²)	13.5									
使用温度范围/Available temperature ℃	－5～70									
使用速度范围/Operation speed (mm/s)	30～500					30～350		30～250		
缓冲型式/Cushioning	固定式缓冲/Fixed bumper									
接管口径/Port size	M5				G1/8					G1/4

行 程/Travel

内径/Bore (mm)	12 16	20 25	32 40 50	63 80 100
不附磁/Without magnet	1～60mm	1～100mm	1～120mm	1～130mm
附磁型/Magnet	1～60mm	1～100mm	1～120mm	1～130mm
最大行程/Max travel	60mm	100mm	120mm	130mm

安装尺寸/Install dimension

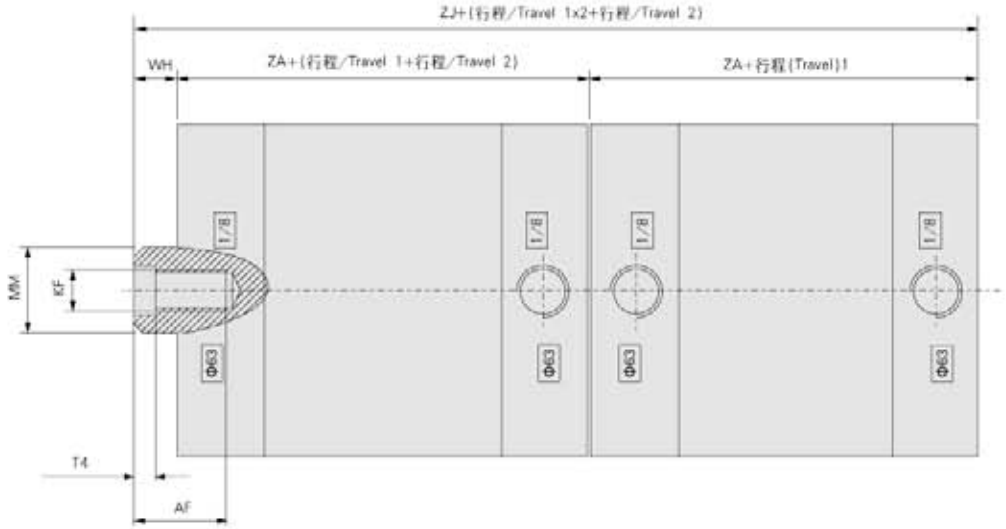

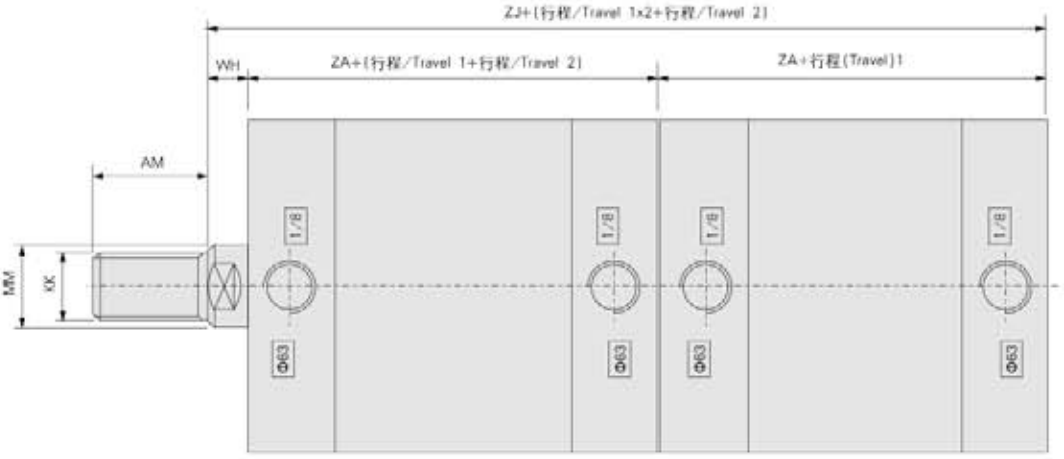

内径/符号(Bore/Symbol)	AF	AM	T4	MM	KF	KK	WH	ZA	ZJ
12	8	10	1.5	6	M3	M5	5	35	75
16	10	12	1.5	8	M4	M6	5	35	75
20	14	16	2.6	10	M6	M8	6	37	80
25	14	16	2.6	10	M6	M8	6	39	84
32	16	19	3.3	12	M8	M10x1.25	5	45	95
40	16	19	3.3	12	M8	M10x1.25	6	45	96
50	20	22	4.7	16	M10	M12x1.25	8	45	98
63	20	22	4.7	16	M10	M12x1.25	7	50	107
80	20	28	6.1	20	M12	M16x1.5	8	55	118
100	20	28	6.1	20	M12	M16x1.5	9	67	143

AEN系列/SERIES

产品特性/Product features



薄 且 轻/Thin and light

在保持既有动作精度及产品使用寿命下，其全长仅为一般气缸的1/2～1/3。发挥既薄且轻的特性。

With the same working precision and lifetime ,the total length saving 50% to 70%.More thin and light.

易 安 装/Easy mounting

使用埋入式的安装方式，不需任何配件达到节省空间的要求

Female thread or through hole on the cylinder, easy mounting without more mounting kits so as to save the space.

易 维 修/Easy repair

采用简易的组装方式进行设计，方便装拆及维修。

Assembly process simply,easy to disassembly and repair.

磁性开关/Sensor switch mounting easily

在本体外围预留装配槽，使磁性开关在安装固定及位置调整时，均极其简单。

Sensor slots on the cylinder ,easy to install the sensor and adjust the sensor position.

符号/Symbol



订购码/Ordering code

AEN — S — 20 X 30 — B — HNA

AEN 型号/Model

AEN：ADN压出型/Rear spring

AENZ：ADN引入型/Front spring

S 感应磁石/Magnet

S：附磁石

S:With magnet

空白：不附磁

Blank:Without magnet

20 缸 径/Bore

30 行 程/Travel

B 牙型/Thread code

空白：内牙

Blank:Female thread

B:外牙/Male thread

N:无牙/Without thread

HNA 固定型式/Mounting type

空白：基本型/Blank:basic

LB：脚架安装/Foot mount

FA：前法兰安装

Front flange mount

FB：后法兰安装

Rear flange mount

CA：单耳环安装/Swivel mount

CB：双耳环安装/Clevis mount

※ 无牙轴心长度与内牙相同/Female thread and without thread have the same length of the piston rod.

举例/Sample

1)欲订购缸径为20mm，行程为25mm，附磁石，活塞杆牙型为内牙使用前法兰安装型式的ADN压出型紧凑型气缸，其正确的订购码代号为：AENS 20X25-FA。

If user need bore 20mm and 25mm travel,with magnet ,piston rod with female thread,front flange mounting type ,rear spring single action ADN compact cylinder the correct order is:AENS-20X25-FA.

2)欲订购缸径为63mm，行程为50mm，不附磁石，活塞杆牙型为外牙使用单耳环安装型式的ADN引入型紧凑型气缸，其正确的定购码代号为：AENZ-63X50-B-CA

If user need bore 63mm and 50mm travel,piston rod with male thread,CA mounting type,front spring single action compact cylinder the correct order is:AENZ-63X50-B-CA.

规 格/Specification

内径/Bore (mm)	12	16	20	25	32	40	50	63	80	100
动作型式/Action type	单动押出型/Single action(rear spring)				单动引入型/Single action(front spring)					
工作介质/Work medium	空 气/Filtered air									
使用压力范围/Operation pressure range(Kgf/cm²)	1～9.0									
保证耐压力/Proof pressure(Kgf/cm²)	13.5									
使用温度范围/Available temperature °C	-5～70									
使用速度范围/Operation speed (mm/s)	30～500						30～350		30～250	
缓冲型式/Cushioning	固定式缓冲/Fixed bumper									
接管口径/Port size	M5				G1/8					
固定型式/Mounting type	FNC				LB	FA	CA	CB		

行 程/Travel

内径/Bore(mm)	12	16	20	25	32	40	50	63	80	100
压出型/Rear spring	1～10mm	1～25mm							1～25mm	
引入型/Front spring	1～10mm	1～25mm							1～25mm	

安装尺寸/Install dimension

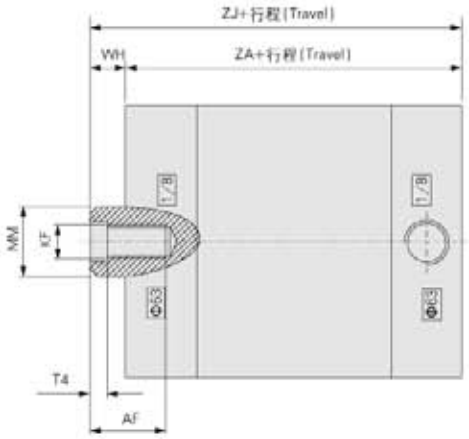

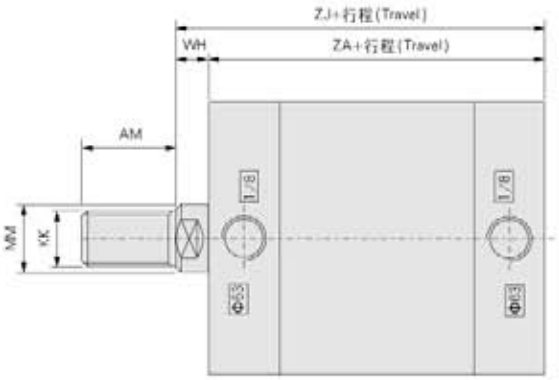

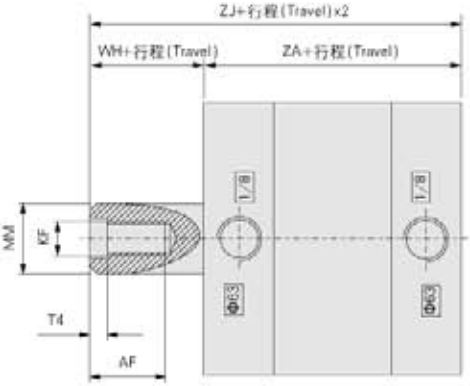

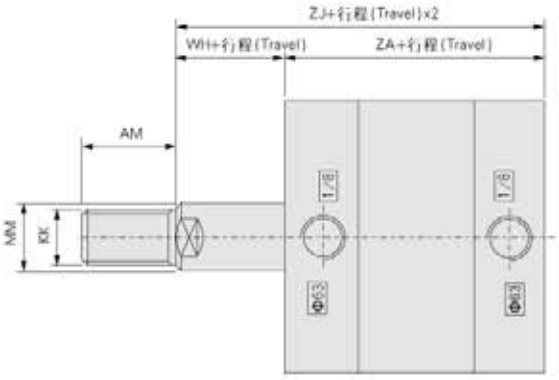

内径/符号(Bore/Symbol)	AF	AM	T4	MM	KF	KK	WH	ZA	ZJ
12	8	10	1.5	6	M3	M5	5	35	40
16	10	12	1.5	8	M4	M6	5	35	40
20	14	16	2.6	10	M6	M8	6	37	43
25	14	16	2.6	10	M6	M8	6	39	45
32	16	19	3.3	12	M8	M10x1.25	5	45	50
40	16	19	3.3	12	M8	M10x1.25	6	45	51
50	20	22	4.7	16	M10	M12x1.25	8	45	53
63	20	22	4.7	16	M10	M12x1.25	7	50	57
80	20	28	6.1	20	M12	M16x1.5	8	55	63
100	20	28	6.1	20	M12	M16x1.5	8	67	76

安装附件/Mounting kits

脚架安装件BY-LB/Foot mount BY-LB

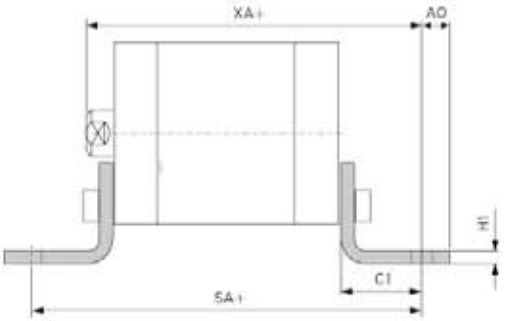

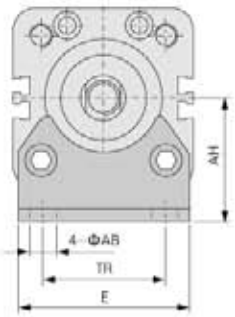

内径/符号(Bore/Symbol)	AB	AO	AH	C1	E	SA	TR	XA
12	5.8	5	21	13	26	61	16	53
16	5.8	4.75	22	13	27.5	61	18	53
20	7	6.25	27	16	34.5	69	22	59
25	7	6.25	29	16	38.5	71	26	61
32	7	7	33.5	16	46	77	32	66
40	10	9	38	18	55	81	36	69
50	10	8	45	21	65	87	45	74
63	10	8	50	21	78	92	50	78
80	12	10.5	63	26	100	107	63	89
100	14.5	12.5	74	27	120	121	75	103

前后法兰安装件BY-FA/ Front and read flange mount BY-FA

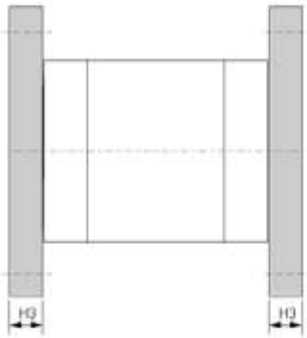

Φ32~Φ100

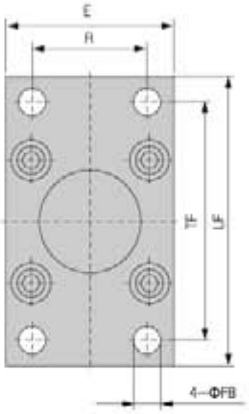

Φ12~Φ25

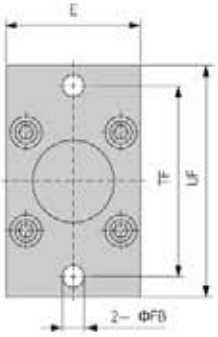

内径/符号(Bore/Symbol)	E	FB	H3	R	TF	UF
12	28	5.5	8	–	40	50
16	29	5.5	8	–	43	55
20	36	6.6	8	–	55	70
25	40	6.6	8	–	60	76
32	47	7	10	32	64	80
40	56	9	10	36	72	90
50	66	9	12	45	90	110
63	79	9	12	50	100	125
80	100	12	16	63	126	154
100	120	14	16	75	150	186

安装附件/Mounting kits

单耳座/Swivel mount BY-CA

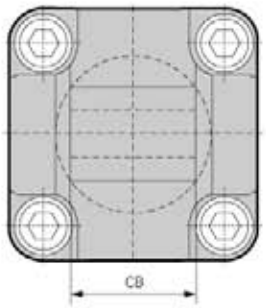

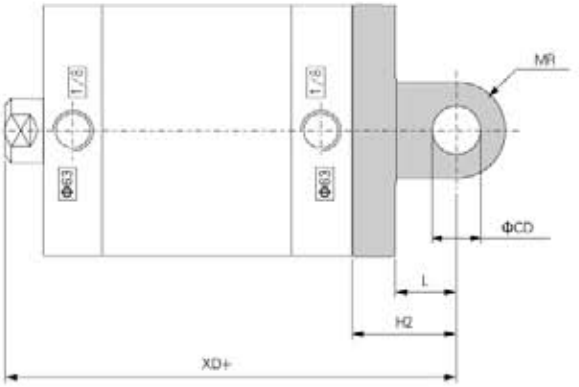

双耳座/Clevis mount BY-CB

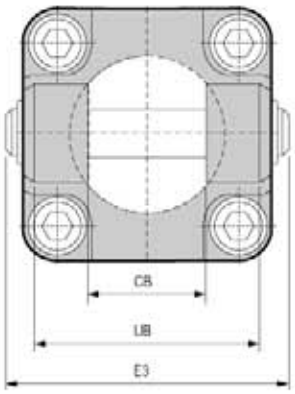

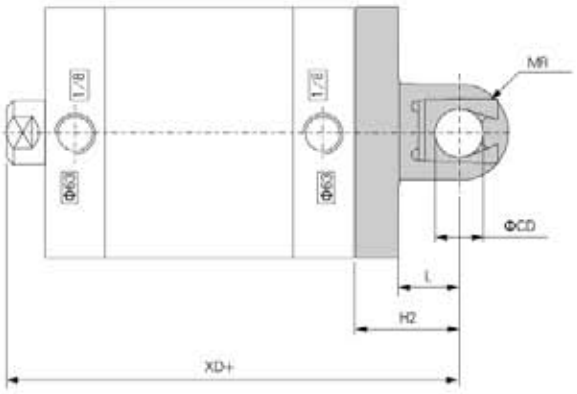

内径/符号(Bore/Symbol)	CB	CD	E3	H2	L	MR	UB	XD
32	26	10	55	22	13	10	45	72
40	28	12	63	25	16	12	52	76
50	32	12	71	27	16	12	60	80
63	40	16	83	32	21	16	70	89
80	50	16	103	36	22	16	90	99
100	60	20	127	41	27	20	110	117

感应开关/Sensor switch

AL - 30

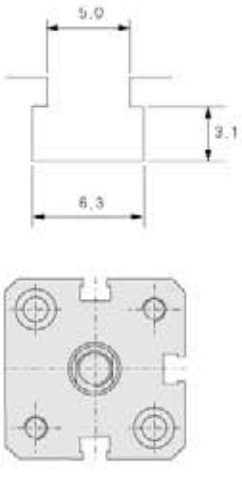

AL - 33

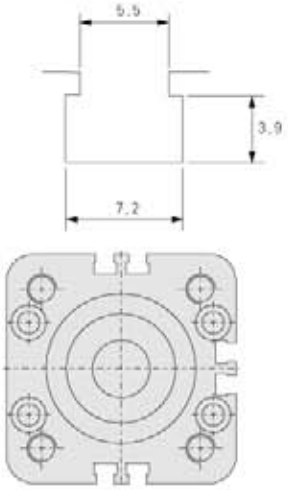



规 格/Specification

型号/Model / 规格项目/Item	AL-30R AL-33R	AL-30N AL-33N	AL-30P AL-33P
开关逻辑/Switch logic	SPST 常开型/Normally open	电子式无接点，常开型/Electron without connector，normally open	
感应开关型式/Sensor switch type	有接点磁环管型/Reed switch with contact	无接点电晶体NPN型(电流流入) Transistor without connector NPN type(electric current in)	无接点电晶体NPN型(电流流出) Transistor without connector NPN type(electric current out)
使用电压范围/Working voltage	5-240V DC/AC	5-28V DC	
最大开关电流/Max switch electric current	100mA最大值/MAX	200mA 最大值/MAX	
最大接点容量/Switching rating	10W最大值/MAX	6W 最大值/MAX	
指示灯/Indicator	红色LED/Red LED	红色LED/red LED	绿色LED/Green LED
电线/Cable	2.8∮2C 灰色耐油/Gray oil proof PVC	2.8∮2C, 灰色耐油PVC/Gray oil proof PVC	
感应灵敏度/Sensitivity	40高斯/40 GAUSS		
最大开关切换频率/Max frequency	200Hz	1000Hz	
使用温度范围/Available temperature	-1-70℃		
耐冲击/Shock	30G	50G	
耐震动/Vibration	8G		
防护等级/Protect rate	IP67(NEMA6)		
接 线 图/WIRING DIAGRAM	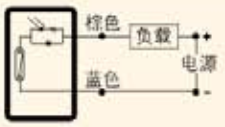		

注：主电路(Main circuit) 棕色(brown) 蓝色(blue) 黑色(black) 负载(load) 电源(power)

使用范围/Application

型号/Model			适用气缸型号/Available cylinder model							
AL-30R	AL-30N	AL-30P	Φ16				Φ25			
AL-33R	AL-33N	AL-33P	Φ12	Φ20	Φ32	Φ40	Φ50	Φ63	Φ80	Φ100

安装与使用/Install&use

- 工作中负载有变化，应选用输出力充裕的气缸，在高温条件下，应选用相应的耐高温气缸。
  The load would be changed during working process,so the cylinder with enough output force should be chosen ,on the case of high temperature , operator is suggested to choose the cylinder with high-temp seals!

- 气缸配管前，必须清除管道内的杂物，防止杂物进入气缸内。
  Before put in the air tube on the cylinder ,the inside surface of the pipe must be cleaned .In order to prevent sundries from entering into cylinder.

- 气缸使用介质应经过40μm以上滤芯过滤后方可使用。
  The medium used by cylinder can not be put into use until it has pass filtering by certain filtering element above 40um.

- 在低温环境下，应采取抗冻措施，防止系统的水分结冰。
  Under condition of low temperature ,the anti-freezing measure must be adopted ,so as to avoid freezing of engineering system.

- 气缸在工作过程中应尽可能避免受侧向负载，以维持气缸的正常工作和使用寿命。
  During the working process ,the cylinder should be avoid side-load,in order to maintain normal working and assure the lifetime of the cylinder.

- 气缸拆下长时间不使用，要注意表面防锈，进排气口应加防尘堵塞帽。
  If the cylinder has been out of work for a long time ,operator should take notice of surface rustproof,the dust proof cap is suggested to be added at air in and out hole .

气缸理论出力计算方法/Formula for cylinder output power

$$F = P \times A - Fo$$

- Fo：弹簧复位力/Spring return power (Kgf)
- A：活塞受压面积/Piston pressed area (cm^2)
- P：工作压力/Working pressure (Kgf/cm^2)
- F：气缸理论出力/The output power of cylinder (Kgf)

规 格/Specification

内径/Bore (mm)		12	16	20	25	32	40	50	63	80	100
动作型式/Action type		复动型/Double action									
		单动推出型/Single action(rear spring) 单动引入型/Single action(front spring)									
工作介质/Work medium		空气/Filtered air									
使用压力范围/Operation pressure range(Kgf/cm^2)	复动型/Double action	1～9.0									
	单动型/Single action	2～9.0						–			
保证耐压力/Proof pressure(Kgf/cm^2)		13.5									
使用温度范围/Available temperature ℃		0～70									
使用速度范围 Operation speed (mm/s)	复动型/Double action	30～500						30～350		30～350	
	单动型/Single action	100～500									
缓冲型式/Cushioning		固定式缓冲/Fixed bumper									
接管口径/Port size		M5x0.8				PT1/8		PT1/4		PT3/8	

技术资料/Technical data

气缸理论出力表/Table for theoretic power of a cylinder

气缸内径 Cylinder ID	活塞杆外径 Outdiameter of piston rod	动作型式/Action type		受压面积 Pressure area(cm^2)	空气压力/Air pressure(Kgf/cm^2)						
					1.0	2.0	3.0	4.0	5.0	6.0	7.0
12	6	压出单动/Single action(rear spring)		1.13	–	0.70	1.83	2.96	4.09	5.22	6.35
		引入单动/Single action(front spring)		0.85	–	0.14	0.99	1.84	2.69	3.54	4.39
		复动型 Double action	压侧/Push side	1.13	–	2.26	3.39	4.52	5.65	6.78	7.91
			拉侧/Pull side	0.85	–	1.70	2.55	3.40	4.25	5.10	5.95
16	6	压出单动/Single action(rear spring)		2.01	–	1.36	3.37	5.38	7.39	9.40	11.41
		引入单动/Single action(front spring)		1.73	–	0.80	2.53	4.26	5.99	7.72	9.45
		复动型 Double action	压侧/Push side	2.01	–	4.02	6.03	8.04	10.05	12.06	14.07
			拉侧/Pull side	1.73	–	3.46	5.19	6.92	8.65	10.38	12.11
20	8	压出单动/Single action(rear spring)		3.14	–	2.87	6.01	9.15	12.29	15.43	18.57
		引入单动/Single action(front spring)		2.64	–	1.87	4.51	7.15	9.79	12.43	15.07
		复动型 Double action	压侧/Push side	3.14		6.28	9.42	12.56	15.70	18.84	21.98
			拉侧/Pull side	2.64	–	5.28	7.92	10.56	13.20	15.84	18.48
25	10	压出单动/Single action(rear spring)		4.90	–	5.80	10.70	15.60	20.50	25.40	30.30
		引入单动/Single action(front spring)		4.12	–	4.24	8.36	12.48	16.60	20.72	24.84
		复动型 Double action	压侧/Push side	4.90	–	9.80	14.70	19.60	24.50	29.40	34.30
			拉侧/Pull side	4.12	–	8.24	12.36	16.48	20.60	24.72	28.87
32	12	压出单动/Single action(rear spring)		8.04	–	11.21	19.25	27.29	35.33	43.37	51.41
		引入单动/Single action(front spring)		6.90	–	8.93	15.83	22.73	29.63	36.53	43.43
		复动型 Double action	压侧/Push side	8.04	–	16.08	24.12	32.16	40.20	48.24	56.28
			拉侧/Pull side	6.90	–	13.80	20.70	27.60	34.50	41.40	48.30
40	16	压出单动/Single action(rear spring)		12.56	12.56	20.08	32.64	45.20	57.76	70.32	82.88
		引入单动/Single action(front spring)		10.55	10.55	16.06	26.61	37.16	47.71	58.26	68.81
		复动型 Double action	压侧/Push side	12.56	12.56	25.12	37.68	50.24	62.80	75.36	87.92
			拉侧/Pull side	10.55	10.55	21.10	31.65	42.20	52.75	63.30	73.85
50	20	复动型 Double action	压侧/Push side	19.63	19.63	39.26	58.89	78.52	98.15	117.78	137.41
			拉侧/Pull side	16.49	16.49	32.98	49.47	65.96	82.45	98.94	115.43
63	20	复动型 Double action	压侧/Push side	31.17	31.17	62.34	93.51	124.68	155.85	187.02	218.19
			拉侧/Pull side	28.03	28.03	56.06	84.09	112.12	140.15	168.18	196.21
80	25	复动型 Double action	压侧/Push side	50.26	50.26	100.52	150.78	201.04	251.30	301.56	351.82
			拉侧/Pull side	45.36	45.36	90.72	136.08	181.44	226.80	272.16	317.52
100	32	复动型 Double action	压侧/Push side	78.53	78.53	157.06	235.59	314.12	392.65	471.18	549.71
			拉侧/Pull side	70.49	70.49	140.98	211.47	281.96	352.45	422.94	493.43

行 程/Travel

内径/Bore (mm)		12 16	20	25		32 40 50	63 80 100
复动型 Double action	不附磁 Without magnet	5～60mm 每/per5mm一级/Grade	5～85mm 每/per5mm一级/Grade	5～90mm 每/per5mm一级/Grade	100～110mm 每/per10mm一级/Grade	5～90mm 每/Per5mm一级/Grade	100～130mm 每/Per10mm一级/Grade
	附磁型/Magnet	5～60mm 每/per5mm一级/Grade	5～75mm 每/per5mm一级/Grade	5～90mm 每/per5mm一级/Grade	100mm	5～90mm 每/Per5mm一级/Grade	100～120mm 每/Per10mm一级/Grade
单动型 Single action	不附磁 Without magnet	5～30mm 每/per5mm一级/Grade	5～30mm 每/per5mm一级/Grade	5～30mm 每/per5mm一级/Grade		5～30mm 每/Per5mm一级/Grade	–
	附磁型/Magnet	5～30mm 每/per5mm一级/Grade	5～30mm 每/per5mm一级/Grade	5～30mm 每/per5mm一级/Grade		5～30mm 每/Per5mm一级/Grade	–
最大行程/Max travel		60mm	100mm	120mm		130mm	

SDA、SSA、STA系列/SERIES

产品特性/Product features



薄 且 轻/Thin and light

在保持既有动作精度及产品使用寿命下，其全长仅为一般气缸的1/2~1/3，发挥既薄且轻的特性/With the same working precision and lifetime ,the total length saving 50% to 70% More thin and light.

易 安 装/Easy mounting

使用埋入式的安装方式，不需任何配件达到节省空间的要求
Female thread or through hole on the cylinder, easy mounting without more mounting kits soas to save the space.

易 维 修/Easy repair

采用简易的组装方式进行设计，方便装拆及维修。
Assembly process simply,easy to disassembly and repair.

磁性开关/Sensor switch mounting easily

在本体外围预留装配槽，使磁性开关在安装固定及位置调整时，均极其简单。
Sensor slots on the cylinder ,easy to install the sensor and adjust the sensor position.

订购码/Ordering code

SDA —— S —— 20 X 30 —— B

- SDA：系列代号/Series code
  - SDA：复动型/Double action
  - SSA：压出型/Rear spring
  - STA：引入型/Front spring
- S：感应磁石/Magnet
  - S：附磁石
  - S：With magnet
  - 空白：不附磁
  - Blank：Without magnet
- 20：缸 径/Bore
- 30：行 程/Travel
- B：牙型/Thread code
  - 空白：内牙
  - blank：Female thread
  - B：外牙/Male thread
  - N：无牙/Without thread

※ 无牙轴心长度与内牙相同/Female thread and without thread have the same length of the piston rod.

举例/Sample

1) 欲订购缸径为50mm，行程为30mm，附磁石，活塞杆牙型为外牙型式的复动型超薄气缸，其正确的订购码代号为：SDAS-50X30-B。
If user need bore 50mm and 30mm travel ,with magnet ,piston rod with male thread,double action compact cylinder the correct order is:SDAS-50X30-B.

2) 欲订购缸径为20mm，行程为25mm，不附磁石，活塞杆牙型为内牙型式的单动型超薄气缸，其正确的定购码代号为：STA-20X25。
If user need bore 20mm and 25mm travel,piston rod with female thread single action compact cylinder the correct order is:STA-20X25.

内部结构及主要零件材质/Inner structure and material list for main parts

SDA型/Series

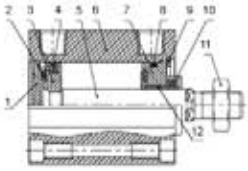

序号/Item	名称/Name	材质/Material
1	后盖/Back cover	无/NO(Φ12 16)\铝合金(其它)/Aluminium alloy or others
2	防撞垫/Cushioning mat	TPU(Φ12~25)\NBR(其它)/NBR or others
3	活塞/Piston	黄铜/brass(Φ12 16)\铝合金(其它)/Aluminium or others
4	活塞圈/Piston ring	NBR
5	活塞杆/Piston rod	S45C镀硬铬研磨棒/S45C hard chrome plated
6	缸筒/Tube	铝合金/Aluminium alloy
7	前盖/Front cover	黄铜/brass(Φ12 16)\铝合金(其它)/Aluminium or others
8	管壁O型圈/O-ring for front cover	NBR
9	C型卡扣/C type clip	弹簧钢/Spring brass
10	防尘圈/Anti dust seals	NBR
11	活塞杆螺帽/Nut for piston rod	碳钢 / Carbon steel
12	衬套/Bush	无/NO(Φ12 16)\耐磨材料(其它)/Wear resistance material or others

安装尺寸/Install dimension

SDA、SDAS型/Series

Φ12~Φ16

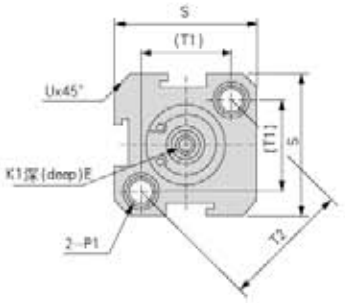

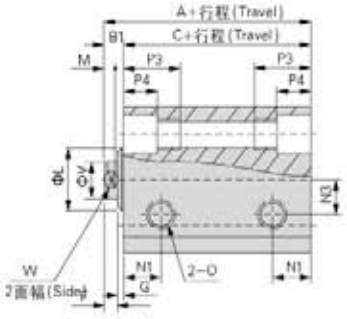

Φ20~Φ100

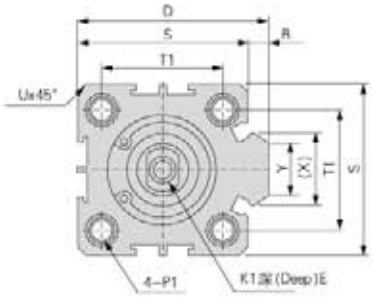

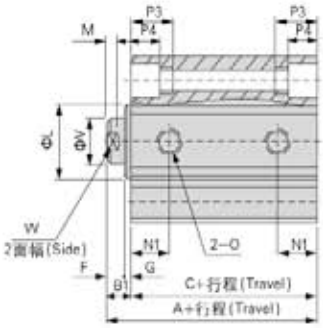

型式/Code	标准型/Standard			附磁型/Magnet			D	E		F	G	K1	L	M	N1
内径/符号(Bore/Symbol)	A	B1	C	A	B1	C		行程(Travel)≤10	行程(Travel)>10						
12	22	5	17	32	5	27	–	6		4	1	M3x0.5	10.2	2.8	6.3
16	24	5.5	18.5	34	5.5	28.5	–	6		4	1.5	M3x0.5	11	2.8	7.3
20	25	5.5	19.5	35	5.5	29.5	36	8		4	1.5	M4x0.7	15	2.8	7.5
25	27	6	21	37	6	31	42	10		4	2	M5x0.8	17	2.8	8
32	31.5	7	24.5	41.5	7	34.5	50	12		4	3	M6x1	22	2.8	9
40	33	7	26	43	7	36	58.5	12		4	3	M8x1.25	28	2.8	10
50	37	9	28	47	9	38	71.5	15		5	4	M10x1.5	38	2.8	10.5
63	41	9	32	51	9	42	84.5	15		5	4	M10x1.5	40	2.8	11.8
80	52	11	41	62	11	51	104	15	20	6	5	M14x1.5	45	4	14.5
100	63	12	51	73	12	61	124	18	20	7	5	M18x1.5	55	4	20.5

内径/符号(Bore/Symbol)	N3	O	P1	P3	P4	R	S	T1	T2	U	V	W	X	Y
12	6	M5x0.8	双边/Double thread Φ6.5牙M5×0.8 通孔/Through Φ4.2	12	4.5	–	25	16.2	23	1.6	6	5	–	–
16	6.5	M5x0.8	双边/Double thread Φ6.5牙M5×0.8 通孔/Through Φ4.2	12	4.5	–	29	19.8	28	1.6	6	5	–	–
20	–	M5x0.8	双边/Double thread Φ6.5牙M5×0.8 通孔/Through Φ4.2	14	4.5	2	34	24	–	2.1	8	6	11.3	10
25	–	M5x0.8	双边/Double thread Φ8.2牙M6×1.0 通孔/Through Φ4.6	15	5.5	2	40	28	–	3.1	10	8	12	10
32	–	PT1/8	双边/Double thread Φ8.2牙M6×1.0 通孔/Through Φ4.6	16	5.5	6	44	34	–	2.15	12	10	19.3	15
40	–	PT1/8	双边/Double thread Φ10牙M8×1.25 通孔/Through Φ6.5	20	7.5	6.5	52	40	–	2.25	16	14	21.3	16
50	–	PT1/4	双边/Double thread Φ11牙M8×1.25 通孔/Through Φ6.5	25	8.5	9.5	62	48	–	4.15	20	17	30	20
63	–	PT1/4	双边/Double thread Φ11牙M8×1.25 通孔/Through Φ6.5	25	8.5	9.5	75	60	–	3.15	20	17	28.7	20
80	–	PT3/8	双边/Double thread Φ14牙M12×1.75 通孔/Through Φ9.2	25	10.5	10	94	74	–	3.65	25	22	36	26
100	–	PT3/8	双边/Double thread Φ17.5牙M14×2 通孔/Through Φ11.3	30	13	10	114	90	–	3.65	32	27	35	26

SDA、SSA、STA系列/SERIES

◎ 安装尺寸/Install dimension

SSA、SSAS型/Series

Φ12~Φ16

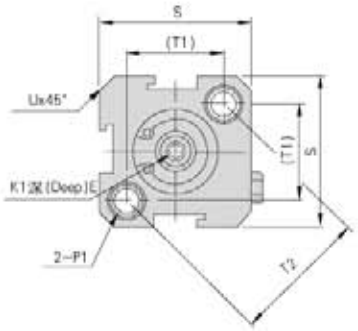

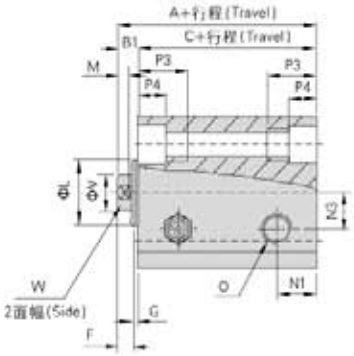

Φ20~Φ40

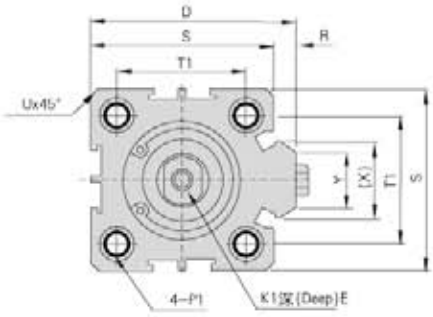

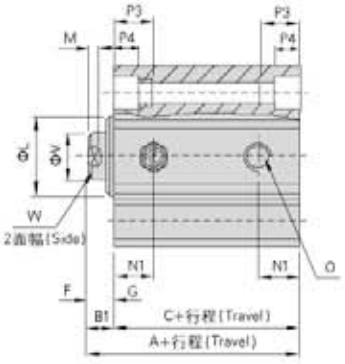

型式/Code	不附磁/Without magnet					附磁/Magnet					D	E	F	G	K1	L	M	N1
内径/符号(Bore/Symbol)	A		B1	C		A		B1	EC									
行程/Travel	≤10	>10		≤10	>10	≤10	>10		≤10	>10								
12	32	42	5	27	37	42	52	5	37	47	–	6	4	1	M3×0.5	10.2	2.8	6.3
16	34	44	5.5	28.5	38.5	44	54	5.5	38.5	48.5	–	6	4	1.5	M3×0.5	11	2.8	7.3
20	35	45	5.5	29.5	39.5	45	55	5.5	39.5	49.5	36	8	4	1.5	M4×0.7	15	2.8	7.5
25	37	47	6	31	41	47	57	6	41	51	42	10	4	2	M5×0.8	17	2.8	8
32	41.5	51.5	7	34.5	44.5	51.5	61.5	7	44.5	54.5	50	12	4	3	M6×1	22	2.8	9
40	43	53	7	36	46	53	63	7	46	56	58.5	12	4	3	M8×1.25	28	2.8	10

内径/符号(Bore/Symbol)	N3	O	P1	P3	P4	R	S	T1	T2	U	V	W	X	Y
12	6	M5×0.8	双边/Double thread,Φ6.5牙M5×0.8 通孔/Through,Φ4.2	12	4.5	–	25	16.2	23	1.6	6	5	–	–
16	6.5	M5×0.8	双边/Double thread,Φ6.5牙M5×0.8 通孔/Through,Φ4.2	12	4.5	–	29	19.8	28	1.6	6	5	–	–
20	–	M5×0.8	双边/Double thread,Φ6.5牙M5×0.8 通孔/Through,Φ4.2	14	4.5	2	34	24	–	2.1	8	6	11.3	10
25	–	M5×0.8	双边/Double thread,Φ8.2牙M6×1.0 通孔/Through,Φ4.6	15	5.5	2	40	28	–	3.1	10	8	12	10
32	–	PT1/8	双边/Double thread,Φ8.2牙M6×1.0 通孔/Through,Φ4.6	16	5.5	6	44	34	–	2.15	12	10	18.3	15
40	–	PT1/8	双边/Double thread,Φ10牙M8×1.25 通孔/Through,Φ6.5	20	7.5	6.5	52	40	–	2.25	16	14	21.3	16

SDA、SSA、STA系列/SERIES

◎ 安装尺寸/Install dimension

STA、STAS型/Series

Φ12~Φ16

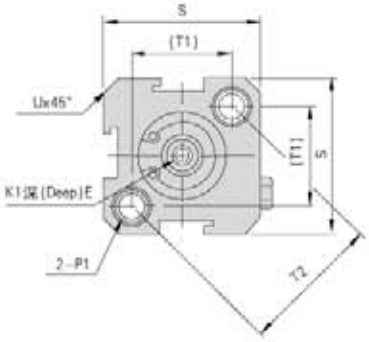

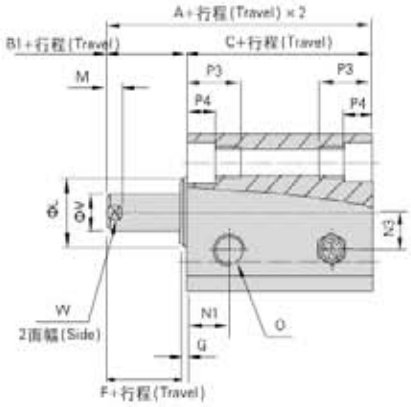

Φ20~Φ40

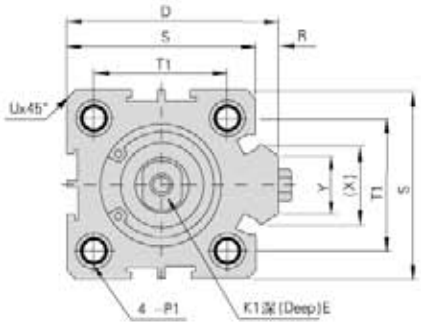

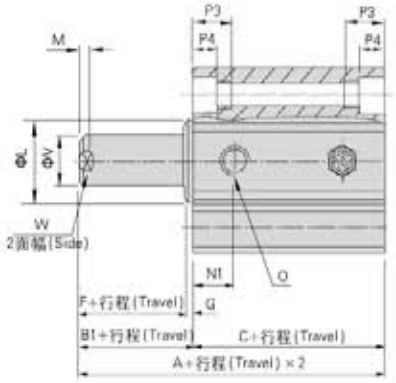

型式/Code	不附磁/Without magnet					附磁/Magnet					D	E	F	G	K1	L	M	N1
内径/符号(Bore/Symbol) 行程/Travel	A		B1	C		A		B1	EC									
	≤10	>10		≤10	>10	≤10	>10		≤10	>10								
12	32	42	5	27	37	42	52	5	37	47	–	6	4	1	M3×0.5	10.2	2.8	6.3
16	34	44	5.5	28.5	38.5	44	54	5.5	38.5	48.5	–	6	4	1.5	M3×0.5	11	2.8	7.3
20	35	45	5.5	29.5	39.5	45	55	5.5	39.5	49.5	36	8	4	1.5	M4×0.7	15	2.8	7.5
25	37	47	6	31	41	47	57	6	41	51	42	10	4	2	M5×0.8	17	2.8	8
32	41.5	51.5	7	34.5	44.5	51.5	61.5	7	44.5	54.5	50	12	4	3	M6×1	22	2.8	9
40	43	53	7	36	46	53	63	7	46	56	58.5	12	4	3	M8×1.25	28	2.8	10

内径/符号(Bore/Symbol)	N3	O	P1	P3	P4	R	S	T1	T2	U	V	W	X	Y
12	6	M5×0.8	双边/Double thread,Φ6.5牙M5×0.8 通孔/Through,Φ4.2	12	4.5	–	25	16.2	23	1.6	8	5	–	–
16	6.5	M5×0.8	双边/Double thread,Φ6.5牙M5×0.8 通孔/Through,Φ4.2	12	4.5	–	29	19.8	28	1.6	8	5	–	–
20	–	M5×0.8	双边/Double thread,Φ6.5牙M5×0.8 通孔/Through,Φ4.2	14	4.5	2	34	24	–	2.1	8	6	11.3	10
25	–	M5×0.8	双边/Double thread,Φ8.2牙M6×1.0 通孔/Through,Φ4.6	15	5.5	2	40	28	–	3.1	10	8	12	10
32	–	PT1/8	双边/Double thread,Φ8.2牙M6×1.0 通孔/Through,Φ4.6	16	5.5	6	44	34	–	2.15	12	10	18.3	15
40	–	PT1/8	双边/Double thread,Φ10牙M8×1.25 通孔/Through,Φ6.5	20	7.5	6.5	52	40	–	2.25	16	14	21.3	16

SDA、SSA、STA系列/SERIES

◎ 外牙尺寸/Male thread dimension

Φ12--Φ16

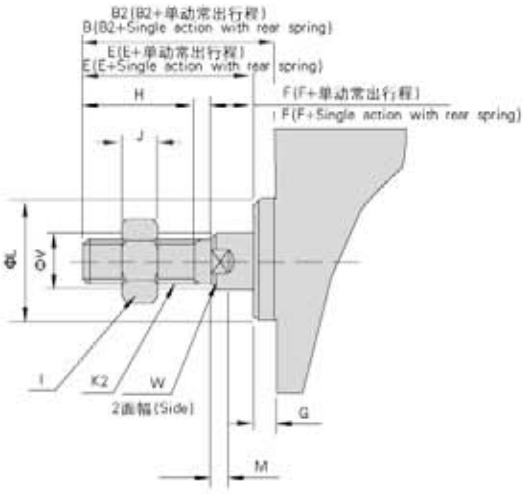

Φ20--Φ100

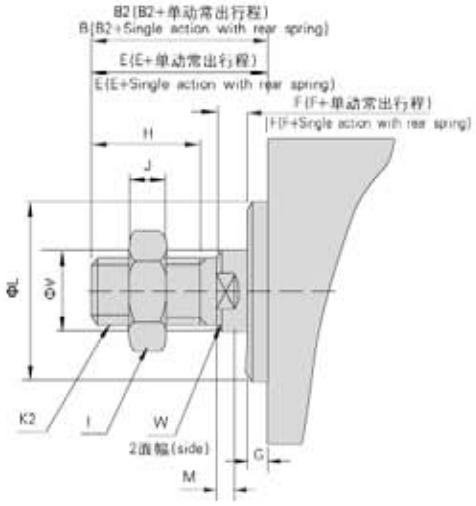

内径/符号(Bore/Symbol)	B2	E	F	G	H	I	J	K2	L	M	V	W
12	17	16	4	1	10	8	4	M5x 0.8	10.2	2.8	6	5
16	17.5	16	4	1.5	10	8	4	M5x 0.8	11	2.8	6	5
20	20.5	19	4	1.5	13	10	5	M6x 1.0	15	2.8	8	6
25	23	21	4	2	15	12	6	M8x 1.25	17	2.8	10	8
32	25	22	4	3	15	17	6	M10x 1.25	22	2.8	12	10
40	35	32	4	3	25	19	8	M14x 1.5	28	2.8	16	14
50	37	33	5	4	25	27	11	M16x 1.5	38	2.8	20	17
63	37	33	5	4	25	27	11	M18x 1.5	40	2.8	20	17
80	44	39	6	5	30	32	13	M22x 1.5	45	4	25	22
100	50	45	7	5	35	36	13	M26x 1.5	55	4	32	27

SDAD系列/SERIES

产品特性/Product features



薄 且 轻/Thin and light

在保持既有动作精度及产品使用寿命下，其全长仅为一般气缸的1/2～1/3，发挥既薄且轻的特性。
With the same working precision and lifetime ,the total length saving 50% to 70%.More thin and light.

易 安 装/Easy mounting

使用埋入式的安装方式，不需任何配件达到节省空间的要求
Female thread or through hole on the cylinder, easy mounting without more mounting kits so as to save the space.

易 维 修/Easy repair

采用简易的组装方式进行设计，方便装拆及维修。
Assembly process simply,easy to disassembly and repair.

磁性开关/Sensor switch mounting easily

在本体外围预留装配槽，使磁性开关在安装固定及位置调整时，均极其简单。
Sensor slots on the cylinder ,easy to install the sensor and adjust the sensor position.

订购码/Ordering code

SDAD — S — 20 X 30 — B

SDAD 动作型式/Action type
SDAD：双轴复动型
SDAD:Two rod double action

S 感应磁石/Magnet
S：附磁石
S:With magnet
空白：不附磁
Blank:Without magnet

20 缸 径/Bore

30 行 程/Travel

B 牙型/Thread code
空白:内牙
Blank:Female thread
B:外牙/Male thread
N:无牙/Without thread

举例/sample

1)欲订购缸径为20mm，行程为30mm，附磁石，活塞杆牙型为内牙型式的双轴复动型超薄气缸，其正确的订购码代号为：SDADS-20X30。
If user need bore 20mm and 30mm travel,with magnet,piston rod with female thread,two rod double action compact cylinder,the correct order is:SDADS-20X30.
2)欲订购缸径为63mm，行程为25mm，不附磁石，活塞杆牙型为外牙型式的双动型超薄气缸，其正确的定购码代号为：SDAD-63X25-B
If user need bore 63mm and 25mm travel,piston rod with male thread two rod double action compact cylinder the correct order is:SDAD-63X25-B.

规 格/Specification

内径/Bore (mm)	12	16	20	25	32	40	50	63	80	100
动作型式/Action type	复动型/Double action									
工作介质/Work medium	空气/Filtered air									
使用压力范围/Operation pressure range(Kgf/cm²)	1～9.0									
保证耐压力/Proof pressure(Kgf/cm²)	13.5									
使用温度范围/Available temperature ℃	0～70									
使用速度范围/Operation speed (mm/s)	30～500						30～350		30～250	
缓冲型式/Cushioning	固定式缓冲/Fixed bumper									
接管口径/Port size	M5×0.8				PT1/8		PT1/4		PT3/8	

行 程/Travel

内径/Bore (mm)	12 16	20	25		32 40 50	63 80 100
不附磁/Without magnet	5～60mm 每/Per5mm一级/Frade	5～85mm 每/Per5mm一级/Frade	5～90mm 每/Per5mm一级/Grade	100～110mm 每/Per10mm一级/Grade	5～90mm 每/Per5mm一级/Grade	100～130mm 每/Per10mm一级/Grade
附磁型/Magnet	5～50mm 每/Per5mm一级/Frade	5～75mm 每/Per5mm一级/Frade	5～90mm 每/Per5mm一级/Grade	100mm	5～90mm 每/Per5mm一级/Grade	100～120mm 每/Per10mm一级/Grade
最大行程/Max travel	60mm	100mm	120mm		130mm	

SDAD系列/SERIES

安装尺寸/Install dimension

SDAD、SDADS型/Series

Φ12~Φ16

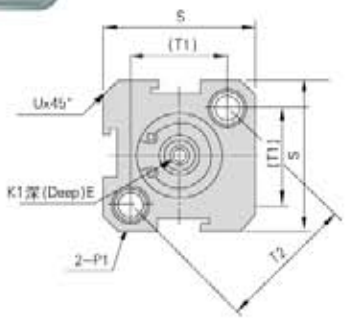

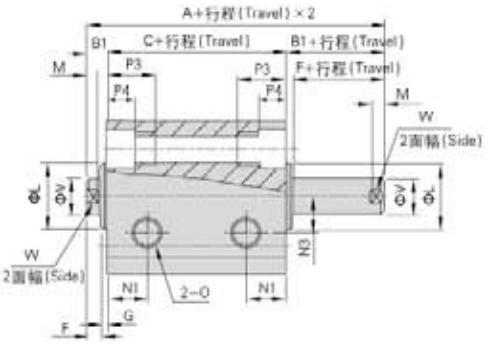

Φ20~Φ100

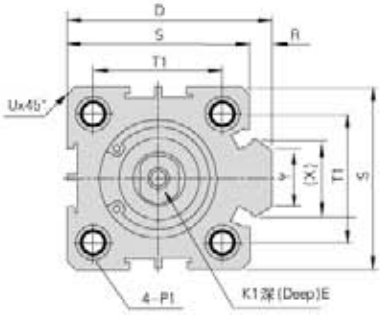

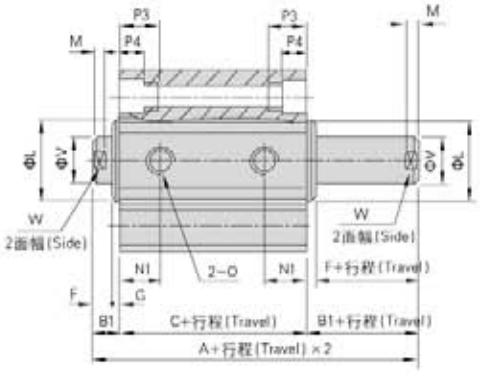

型式/Code	不附磁/Without magnet			附磁/Magnet			D	E		F	G	K1	L	M	N1
内径/符号(Bore/Symbol) 行程/Travel	A	B1	C	A	B1	C		行程(Travel)≤10	行程(Travel)>10						
12	27	5	17	37	5	27	–	6		4	1	M3×0.5	10.2	2.8	6.3
16	29.5	5.5	18.5	39.5	5.5	28.5	–	6		4	1.5	M3×0.5	11	2.8	7.3
20	30.5	5.5	19.5	40.5	5.5	29.5	36	8(行程/When travel=5时为6.5)		4	1.5	M4×0.7	15	2.8	7.5
25	33	6	21	43	6	31	42	10(行程/When travel=5时为7)		4	2	M5×0.8	17	2.8	8
32	38.5	7	24.5	48.5	7	34.5	50	8	12	4	3	M6×1	22	2.8	9
40	40	7	26	50	7	36	58.5	9	12	4	3	M8×1.25	28	2.8	10
50	46	9	28	56	9	38	71.5	11	15	5	4	M10×1.5	38	2.8	10.5
63	50	9	32	60	9	42	84.5	11	15	5	4	M10×1.5	40	2.8	11.8
80	63	11	41	73	11	51	104	14	20	6	5	M14×1.5	45	4	14.5
100	75	12	51	85	12	61	124	18	20	7	5	M18×1.5	55	4	20.5

内径/符号(Bore/Symbol)	N3	O	P1	P3	P4	R	S	T1	T2	U	V	W	X	Y
12	6	M5×0.8	双边/Double thread,Φ6.5牙M5×0.8 通孔/Through,Φ4.2	12	4.5	–	25	16.2	23	1.6	6	5	–	–
16	6.5	M5×0.8	双边/Double thread,Φ6.5牙M5×0.8 通孔/Through,Φ4.2	12	4.5	–	29	19.8	28	1.6	6	5	–	–
20	–	M5×0.8	双边/Double thread,Φ6.5牙M5×0.8 通孔/Through,Φ4.2	14	4.5	2	34	24	–	2.1	8	6	11.3	10
25	–	M5×0.8	双边/Double thread Φ8.2牙M6×1.0 通孔/Through,Φ4.6	15	5.5	2	40	28	–	3.1	10	8	12	10
32	–	PT1/8	双边/Double thread Φ8.2牙M6×1.0 通孔/Through,Φ4.6	16	5.5	6	44	34	–	2.15	12	10	18.3	15
40	–	PT1/8	双边/Double thread,Φ10牙M8×1.25 通孔/Through,Φ6.5	20	7.5	6.5	52	40	–	2.25	16	14	21.3	16
50	–	PT1/4	双边/Double thread,Φ11牙M8×1.25 通孔/Through,Φ6.5	25	8.5	9.5	62	48	–	4.15	20	17	30	20
63	–	PT1/4	双边/Double thread,Φ11牙M8×1.25 通孔/Through,Φ6.5	25	8.5	9.5	75	60	–	3.15	20	17	28.7	20
80	–	PT3/8	双边/Double thread,Φ14牙M12×1.75 通孔/Through,Φ9.2	25	10.5	10	94	74	–	3.65	25	22	36	26
100	–	PT3/8	双边/Double thread,Φ17.5牙M14×2 通孔/Through,Φ11.3	30	13	10	114	90	–	3.65	32	27	35	26

SDAJ系列/SERIES

产品特性/Product features

薄 且 轻/Thin and light

在保持既有动作精度及产品使用寿命下，其全长仅为一般气缸的1/2～1/3。发挥既薄且轻的特性。
With the same working precision and lifetime ,the total length saving 50% to 70%.More thin and light.



易 安 装/Easy mounting

使用埋入式的安装方式，不需任何配件达到节省空间的要求
Female thread or through hole on the cylinder, easy mounting without more mounting kits so as to save the space.

易 维 修/Easy repair

采用简易的组装方式进行设计，方便装拆及维修。
Assembly process simply,easy to disassembly and repair.

磁性开关/Sensor switch mounting easily

在本体外围预留装配槽，使磁性开关在安装固定及位置调整时，均极其简单。
Sensor slots on the cylinder ,easy to install the sensor and adjust the sensor position.

行程可调性/Adjustable travel

活塞杆端配以可调螺母，使行程在规定范围内实现可调。
Adjustable screw nut on the piston rod ,so as to make the cylinder with adjustable travel.

订购码/Ordering code

SDAJ —— S —— 20 X 30 —— 10 —— B

- SDAJ — 动作型式/Action type
  - SDAJ:复动可调行程型
  - SDAJ:Double action with adjustable travel
- S — 感应磁石/Magnet
  - S：附磁石
  - S:With magnet
  - 空白：不附磁
  - Blank:Without magnet
- 20 — 缸 径/Bore
- 30 — 行 程/Travel
- 10 — 调整行程 Adjustable travel
- B — 牙型/Thread code
  - 空白:内牙
  - Blank:Female thread
  - B:外牙/Male thread
  - N:无牙/Without thread

举例/sample

1)欲订购缸径为20mm,行程为30mm,调整行程为25mm,附磁石,活塞杆牙型为内牙型式的双轴复动可调型超薄气缸,其正确的订购码代号为:SDAJS-20X30-25
If user need bore 20mm and 30mm travel,the adjustable travel is 25mm,with magnet,piston rod with female thread two rod double action with adjustable travel compact cylinder,the correct order is:SDAJS-20X30-25.

2)欲订购缸径为63mm,行程为75mm,调整行程为50mm,不附磁石,活塞杆牙型为无牙型式的双轴复动可调型超薄气缸,其正确的定购码代号为:SDAJ-63X75-50-N
If user need bore 63mm and 75mm travel,the adjustable travel is 50mm,piston rod without thread,two rod double action with adjustable travel compact cylinder,the correct order is:SDAJ-63X75-50-N.

规 格/Specification

内径/Bore (mm)	12	16	20	25	32	40	50	63	80	100
动作型式/Action type	复动型/Double action									
工作介质/Work medium	空气/Filtered air									
使用压力范围/Operation pressure range(Kgf/cm²)	1～9.0									
保证耐压力/Proof pressure(Kgf/cm²)	13.5									
使用温度范围/Available temperature ℃	0～70									
使用速度范围/Operation speed (mm/s)	30～500						30～350		30～250	
缓冲型式/Cushioning	固定式缓冲/Fixed bumper									
接管口径/Port size	M5×0.8				PT1/8		PT1/4		PT3/8	

行 程/Travel

内径/Bore (mm)	12 16	20	25		32 40 50	63 80 100
不附磁/Without magnet	5~60mm 每/Per5mm一级/Grade	5~85mm 每/Per5mm一级/Grade	5~90mm 每/Per5mm一级/Grade	100~110mm 每/Per10mm一级/Grade	5~90mm 每/Per5mm一级/Grade	100~130mm 每/Per10mm一级/Grade
附磁型/Magnet	5~50mm 每/Per5mm一级/Grade	5~75mm 每/Per5mm一级/Grade	5~90mm 每/Per5mm一级/Grade	100mm	5~90mm 每/Per5mm一级/Grade	100~120mm 每/Per10mm一级/Grade
最大行程/Max travel	60mm	100mm	120mm		130mm	

安装尺寸/Install dimension

SDAJ、SDAJS型/Series

Φ12~Φ16

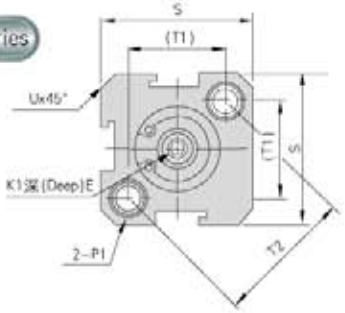

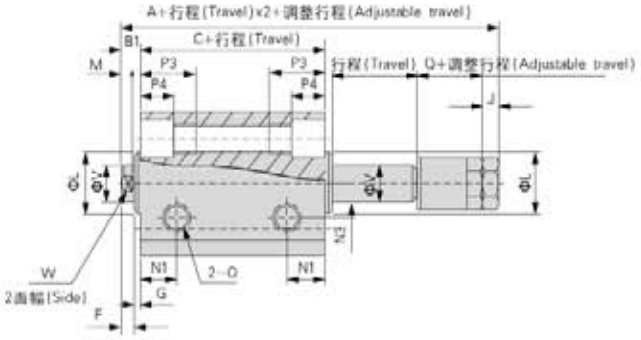

Φ20~Φ100

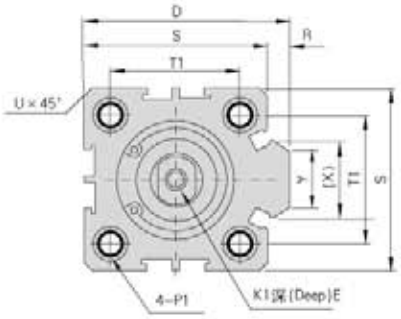

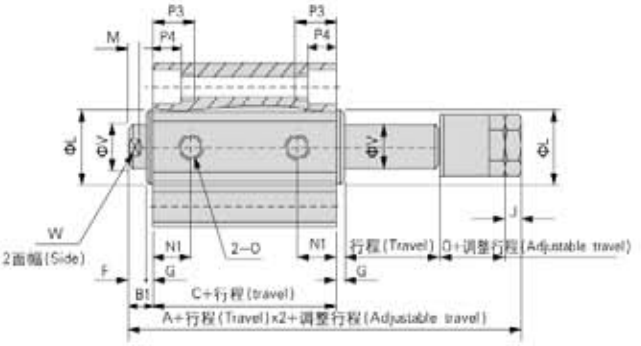

型式/Code	标准型/Standard			附磁型/Magnet			D	E		F	G	J	K1	L	M	N1
内径/符号(Bore/Symbol)	A	B1	C	A	B1	C		行程(Travel)≤10	行程(Travel)>10							
12	40	5	17	50	5	27	–	6		4	1	4	M3×0.5	10.2	2.8	6.3
16	42.5	5.5	18.5	52.5	5.5	28.5	–	6		4	1.5	4	M3×0.5	11	2.8	7.3
20	47.5	5.5	19.5	57.5	5.5	29.5	36	8(行程/When travel=5时为6.5)		4	1.5	5	M4×0.7	16	2.8	7.5
25	55	6	21	65	6	31	42	10(行程/When travel=5时为7)		4	2	6	M5×0.8	17	2.8	8
32	61.5	7	24.5	71.5	7	34.5	50	8	12	4	3	6	M6×1	22	2.8	9
40	65	7	26	75	7	36	58.5	9	12	4	3	8	M8×1.25	28	2.8	10
50	73	9	28	83	9	38	71.5	11	15	5	4	11	M10×1.5	38	2.8	10.5
63	77	9	32	87	9	42	84.5	11	15	5	4	11	M10×1.5	40	2.8	11.8
80	94	11	41	104	11	51	104	14	20	6	5	13	M14×1.5	45	4	14.5
100	105	12	51	115	12	61	124	18	20	7	5	13	M18×1.5	55	4	20.5

内径/符号(Bore/Symbol)	N3	O	P1	P3	P4	Q	R	S	T1	T2	U	V	W	X	Y
12	6	M5×0.8	双边/Double thread,Φ6.5牙M5×0.8 通孔/Through,Φ4.2	12	4.5	13	–	25	16.2	23	1.6	6	5	–	–
16	6.5	M5×0.8	双边/Double thread,Φ6.5牙M5×0.8 通孔/Through,Φ4.2	12	4.5	13	–	29	19.8	28	1.6	6	5	–	–
20	–	M5×0.8	双边/Double thread,Φ6.5牙M5×0.8 通孔/Through,Φ4.2	14	4.5	16	2	34	24	–	2.1	8	6	11.3	10
25	–	M5×0.8	双边/Double thread,Φ8.2牙M6×1.0 通孔/Through,Φ4.6	15	5.5	19	2	40	28	–	3.1	10	8	12	10
32	–	PT1/8	双边/Double thread,Φ8.2牙M6×1.0 通孔/Through,Φ4.6	16	5.5	21	6	44	34	–	2.15	12	10	18.3	15
40	–	PT1/8	双边/Double thread,Φ10牙M8×1.25 通孔/Through,Φ6.5	20	7.5	21	6.5	52	40	–	2.25	16	14	21.3	16
50	–	PT1/4	双边/Double thread,Φ11牙M8×1.25 通孔/Through,Φ6.5	25	8.5	21	9.5	62	48	–	4.15	20	17	30	20
63	–	PT1/4	双边/Double thread,Φ11牙M8×1.25 通孔/Through,Φ6.5	25	8.5	21	9.5	75	60	–	3.15	20	17	28.7	20
80	–	PT3/8	双边/Double thread,Φ14牙M12×1.75 通孔/Through,Φ9.2	25	10.5	24	10	94	74	–	3.65	25	22	36	26
100	–	PT3/8	双边/Double thread,Φ17.5牙M14×2 通孔/Through,Φ11.3	30	13	24	10	114	90	–	3.65	32	27	35	26

SDAT系列/SERIES

产品特性/Product features



薄 且 轻/Thin and light

在保持既有动作精度及产品使用寿命下，其全长仅为一般气缸的1/2～1/3。发挥既薄且轻的特性。

With the same working precision and lifetime ,the total length saving 50% to 70%.More thin and light.

易 安 装/Easy mounting

使用埋入式的安装方式，不需任何配件达到节省空间的要求

Female thread or through hole on the cylinder, easy mounting without more mounting kits so as to save the space.

易 维 修/Easy repair

采用简易的组装方式进行设计，方便装拆及维修。

Assembly process simply,easy to disassembly and repair.

符号/Symbol

SDAT

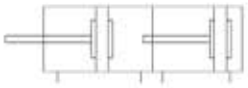

SDATS

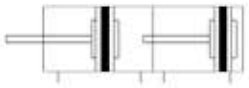

磁性开关/Sensor switch mounting easily

在本体外围预留装配槽，使磁性开关在安装固定及位置调整时，均极其简单。

Sensor slots on the cylinder ,easy to install the sensor and adjust the sensor position.

多位置性/Multi-position

利用两支气缸串联且使用不同的阀控制，使气缸在整个行程范围内有多个工作位置。

Series connection two cylinder and control them by different valve so as to make the cylinder working on different position.

订购码/Ordering code

SDAT — S — 20 X 30 — 10 — B

- SDAT — 动作型式/Action type
  - SDAT：复动多位置型
  - Double action multi-position
- S — 感应磁石/Magnet
  - S：附磁石
  - S:With magnet
  - 空白：不附磁
  - Blank:Without magnet
- 20 — 缸 径/Bore
- 30 — 行程1/Travel 1
- 10 — 行程2/Travel 2
- B — 牙型/Thread code
  - 空白:内牙
  - Blank,Female thread
  - B:外牙/Male thread
  - N:无牙/Without thread

举例/Sample

1)欲订购缸径为20mm,行程1为30mm,行程2为10mm,附磁石,活塞杆牙型为内牙型式的复动多位置型超薄气缸,其正确的订购码代号为:SDATS-20X30X10。

If user need bore 20mm and the first travel is 30mm,the second travel is 10mm,with magnet,piston rod with female thread,multi position double action compact cylinder the correct order is:SDATS-20X30X10.

2)欲订购缸径为63mm,行程1为35mm,行程2为10mm,不附磁石,活塞杆牙型为无牙型式的复动多位置型超薄气缸,其正确的定购码代号为:SDAT-63X35X10-N

If user need bore 63mm and the first travel is 35mm,the second travel is 10mm,piston rod without thread,multi position double action compact cylinder the correct order is:SDAT-63X35X10-N.

规 格/Specification

内径/Bore (mm)	12	16	20	25	32	40	50	63	80	100
动作型式/Action type	复动型/Double action									
工作介质/Work medium	空气/Filtered air									
使用压力范围/Operation pressure range(Kgf/cm²)	1～9.0									
保证耐压力/Proof pressure(Kgf/cm²)	13.5									
使用温度范围/Available temperature ℃	0～70									
使用速度范围/Operation speed (mm/s)	30～500						30～350		30～250	
缓冲型式/Cushioning	固定式缓冲/Fixed bumper									
接管口径/Port size	M5×0.8				PT1/8		PT1/4		PT3/8	

行 程/Travel

内径/Bore (mm)	12 16	20	25		32 40 50	63 80 100
不附磁/Without magnet	5~60mm 每/Per5mm一级/Grade	5~85mm 每/Per5mm一级/Grade	5~90mm 每/Per5mm一级/Grade	100~110mm 每/Per10mm一级/grade	5~90mm 每/Per5mm一级/Grade	100~130mm 每/Per10mm一级/Frade
附磁型/Magnet	5~50mm 每/Per5mm一级/Grade	5~75mm 每/Per5mm一级/Grade	5~90mm 每/Per5mm一级/Grade	100mm	5~90mm 每/Per5mm一级/Grade	100~120mm 每/Per10mm一级/Frade
最大行程/Max travel	60mm	100mm	120mm		130mm	

安装尺寸/Install dimension

SDAT、SDATS型/Series

Φ12~Φ16

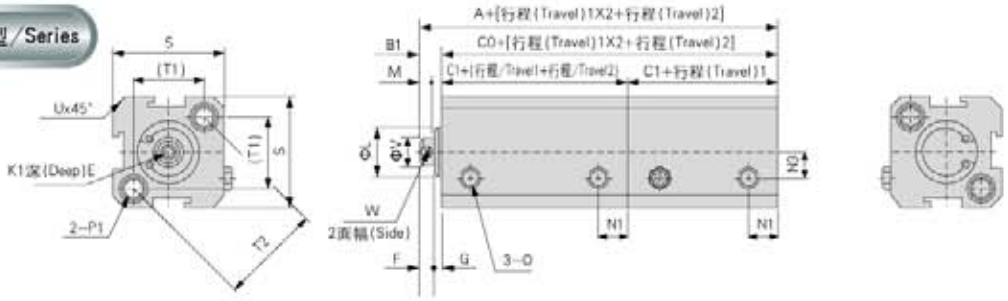

Φ20~Φ100

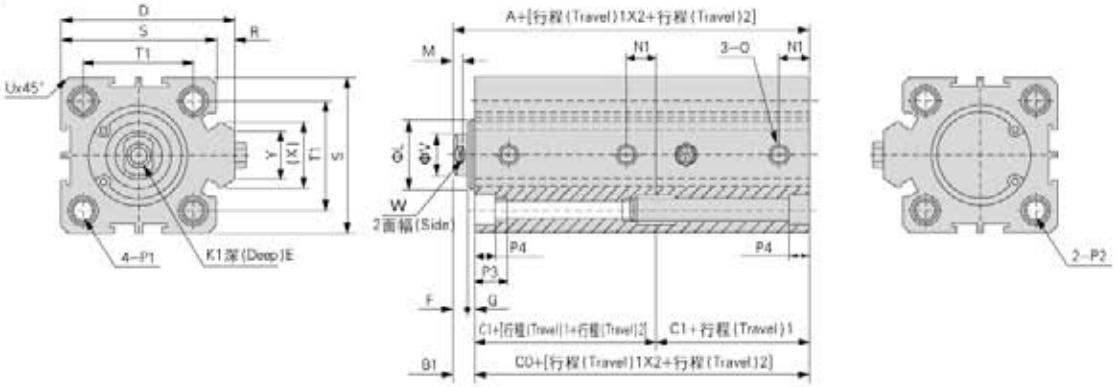

型号/Symbol	标准型/Standard				附磁型/Magnet				D	E		F	G	K1	L	M	N1	N3
内径/符号(Bore/Symbol)	A	B1	C0	C1	A	B1	C0	C1		行程(Travel)≤10	行程(Travel)>10							
12	39	5	34	17	59	5	54	27	–	6		4	1	M3×0.5	10.2	2.8	6.3	6
16	42.5	5.5	37	18.5	62.5	5.5	57	28.5	–	6		4	1.5	M3×0.5	11	2.8	7.3	6.3
20	44.5	5.5	39	19.5	64.5	5.5	59	29.5	36	8		4	1.5	M4×0.7	15	2.8	7.5	–
25	48	6	42	21	68	6	62	31	42	10		4	2	M5×0.8	17	2.8	8	–
32	56	7	49	24.5	76	7	69	34.5	50	12		4	3	M6×1	22	2.8	9	–
40	59	7	52	26	79	7	72	36	58.5	12		4	3	M8×1.25	28	2.8	10	–
50	65	9	56	28	85	9	76	38	71.5	15		5	4	M10×1.5	38	2.8	10.5	–
63	73	9	64	32	93	9	84	42	84.5	15		5	4	M10×1.5	40	2.8	11.8	–
80	93	11	82	41	113	11	102	51	104	15	18	6	5	M14×1.5	45	4	14.5	–
100	114	12	102	51	134	12	122	61	124	18	20	7	5	M18×1.5	55	4	20.5	–

内径/符号 (Bore/Symbol)	O	P1	P2	P3	P4	R	S	T1	T2	U	V	W	X	Y
12	M5×0.8	双边/Double thread,Φ6.5牙 M5×0.8 通孔/Through,Φ4.2	–	12	4.5	–	25	16.2	23	1.6	6	5	–	–
16	M5×0.8	双边/Double thread,Φ6.5牙 M5×0.8 通孔/Through,Φ4.2	–	12	4.5	–	28	19.8	28	1.6	6	5	–	–
20	M5×0.8	双边/Double thread,Φ6.5牙 M5×0.8 通孔/Through,Φ4.2	双边/Double thread,Φ6.5 通孔/Through,Φ5.2	14	4.5	2	34	24	–	2.1	8	6	11.3	10
25	M5×0.8	双边/Double thread,Φ8.2牙 M6×1.0 通孔/Through,Φ4.6	双边/Double thread,Φ8.2 通孔/Through,Φ6.2	15	5.5	2	40	28	–	3.1	10	8	12	10
32	PT1/8	双边/Double thread,Φ8.2牙 M6×1.0 通孔/Through,Φ4.6	双边/Double thread,Φ8.2 通孔/Through,Φ6.2	16	5.5	6	44	34	–	2.15	12	10	18.3	15
40	PT1/8	双边/Double thread,Φ10牙 M8×1.25 通孔/Through,Φ6.5	双边/Double thread,Φ10 通孔/Through,Φ8.2	20	7.5	6.5	52	40	–	2.25	16	14	21.3	16
50	PT1/4	双边/Double thread,Φ11牙 M8×1.25 通孔/Through,Φ6.5	双边/Double thread,Φ11 通孔/Through,Φ8.5	25	8.5	9.5	62	48	–	4.15	20	17	30	20
63	PT1/4	双边/Double thread,Φ11牙 M8×1.25 通孔/Through,Φ6.5	双边/Double thread,Φ11 通孔/Through,Φ8.5	25	8.5	9.5	75	60	–	3.15	20	17	28.7	20
80	PT3/8	双边/Double thread,Φ14牙 M12×1.75 通孔/Through,Φ9.2	双边/Double thread,Φ14 通孔/Through,Φ12.3	25	10.5	10	94	74	–	3.65	25	22	36	26
100	PT3/8	双边/Double thread,Φ17.5牙 M14×2 通孔/Through,Φ11.3	双边/Double thread,Φ17.5 通孔/Through,Φ14.2	30	13	10	114	90	–	3.65	32	27	35	26

SDAW系列/SERIES

产品特性/Product features



薄 且 轻/Thin and light

在保持既有动作精度及产品使用寿命下，其全长仅为一般气缸的1/2－1/3，发挥既薄且轻的特性。

With the same working precision and lifetime ,the total length saving 50% to 70%.More thin and light.

易 安 装/Easy mounting

使用埋入式的安装方式，不需任何配件达到节省空间的要求

Female thread or through hole on the cylinder, easy mounting without more mounting kits so as to save the space.

易 维 修/Easy repair

采用简易的组装方式进行设计，方便装拆及维修。

Assembly process simply,easy to disassembly and repair.

磁性开关/Sensor switch mounting easily

在本体外围预留装配槽，使磁性开关在安装固定及位置调整时，均极其简单。

Sensor slots on the cylinder ,easy to install the sensor and adjust the sensor position.

符号/Symbol



多位置性/Multi-position

利用两支气缸串联且使用不同的阀控制，使气缸在整个行程范围内有多个工作位置。

Series connection two cylinder and control them by different valve so as to make the cylinder working on different position.

订购码/Ordering code

SDAW — S — 20 X 30 — 10 — B

- SDAW：动作型式/Action type
  - SDAW：双轴复动多位置型
  - SDAW：Two rod double action multi-position
- S：磁石代号/Magnet code
  - S：附磁石
  - S：With magnet
  - 空白：不附磁
  - Blank：Without magnet
- 20：缸 径/Bore
- 30：行程1/Travel 1
- 10：行程2/Travel 2
- B：牙型/Thread code
  - 空白：内牙
  - Blank：Female thread
  - B：外牙/Male thread
  - N：无牙/Without thread

举例/Sample

1）欲订购缸径为20mm，行程1为30mm，行程2为10mm，附磁石，活塞杆牙型为内牙型式的双轴复动多位置型超薄气缸，其正确的订购码代号为：SDAWS－20X30X10

If user need bore 20mm and the first travel is 30mm,the second travel is 10mm,with magnet,piston rod with female thread,two rod multi position double action compact cylinder the correct order is:SDAWS-20X30X10.

2）欲订购缸径为63mm，行程1为35mm，行程2为10mm，不附磁石，活塞杆牙型为内牙型式的双轴复动多位置型超薄气缸，其正确的定购码代号为：SDAW－63X35X10－N

If user need bore 63mm and the first travel is 35mm,the second travel is 10mm,piston rod with female thread,two rod multi position double action compact cylinder the correct order is:SDAW-63X35X10-N.

规　格/Specification

内径/Bore (mm)	12	16	20	25	32	40	50	63	80	100
动作型式/Action type	复动型/Double action									
工作介质/Work medium	空气/Filtered air									
使用压力范围/Operation pressure range(Kgf/cm²)	1～9.0									
保证耐压力/Proof pressure(Kgf/cm²)	13.5									
使用温度范围/Available temperature ℃	0～70									
使用速度范围/Operation speed (mm/s)	30～500						30～350		30～250	
缓冲型式/Cushioning	固定式缓冲/Fixed bumper									
接管口径/Port size	M5×0.8				PT1/8		PT1/4		PT3/8	

行 程/Travel

内径/Bore (mm)	12 16	20	25		32 40 50	63 80 100
不附磁/Without magnet	5～60mm 每/Per5mm一级/Grade	5～85mm 每/Per5mm一级/Grade	5～90mm 每/Per5mm一级/Grade	100～110mm 每/Per10mm一级/Grade	5～90mm 每/Per5mm一级/Grade	100～130mm 每/per10mm一级/grade
附磁型/Magnet	5～50mm 每/Per5mm一级/Grade	5～75mm 每/Per5mm一级/Grade	5～90mm 每/Per5mm一级/Grade	100mm	5～90mm 每/Per5mm一级/Grade	100～120mm 每/per10mm一级/grade
最大行程/Max travel	60mm	100mm	120mm		130mm	

安装尺寸/Install dimension

SDAW、SDAWS型/Series

Φ12～Φ16

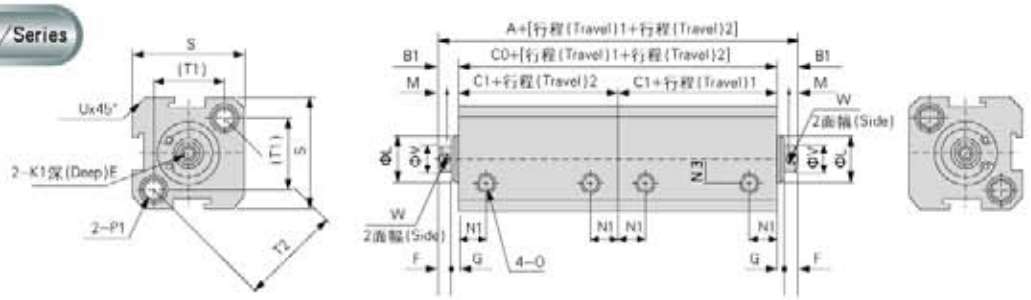

Φ20～Φ100

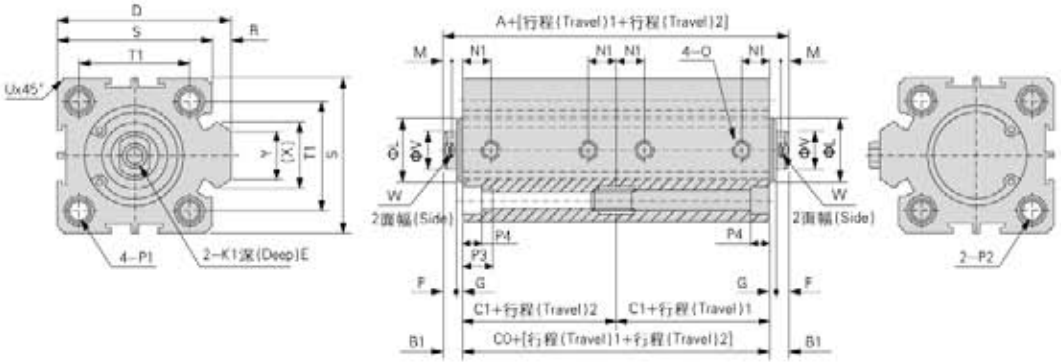

型号/Symbol	标准型 / Standard				附磁型/Magnet				D	E		F	G	K1	L	M	N1	N3
内径/符号(Bore/Symbol)	A	B1	C0	C1	A	B1	C0	C1		行程(Travel)≤10	行程(Travel)>10							
12	44	5	34	17	64	5	54	27	–	6		4	1	M3×0.5	10.2	2.8	6.3	6
16	48	5.5	37	185	68	5.5	57	28.5	–	6		4	1.5	M3×0.5	11	2.8	7.3	6.5
20	50	5.5	39	19.5	70	5.5	59	29.5	36	8		4	1.5	M4×0.7	15	2.8	7.5	–
25	54	6	42	21	74	6	62	31	42	10		4	2	M5×0.8	17	2.8	8	–
32	63	7	49	24.5	83	7	69	34.5	50	12		4	3	M6×1	22	2.8	9	–
40	66	7	52	26	86	7	72	36	58.5	12		4	3	M8×1.25	28	2.8	10	–
50	74	9	56	28	94	9	76	38	71.5	15		5	4	M10×1.5	38	2.8	10.5	–
63	82	9	64	32	102	9	84	42	84.5	15		5	4	M10×1.5	40	2.8	11.8	–
80	104	11	82	41	124	11	102	51	104	15	20	6	5	M14×1.5	45	4	14.5	–
100	126	12	102	51	146	12	122	61	124	18	20	7	5	M18×1.5	55	4	20.5	–

内径/符号 (Bore/Symbol)	O	P1	P2	P3	P4	R	S	T1	T2	U	V	W	X	Y
12	M5×0.8	双边/Double thread Φ6.5牙 M5×0.8 通孔/Through Φ4.2	–	12	4.5	–	25	16.2	23	1.6	6	5	–	–
16	M5×0.8	双边/Double thread Φ6.5牙 M5×0.8 通孔/Through Φ4.2	–	12	4.5	–	28	19.8	28	1.6	6	5	–	–
20	M5×0.8	双边/Double thread Φ6.5牙 M5×0.8 通孔/Through Φ4.2	双边/Double thread Φ6.5 通孔/Through Φ6.2	14	4.5	2	34	24	–	2.1	8	6	11.3	10
25	M5×0.8	双边/Double thread Φ8.2牙 M8×1.0 通孔/Through Φ4.6	双边/Double thread Φ8.2 通孔/Through Φ6.2	15	5.5	2	40	28	–	3.1	10	8	12	10
32	PT1/8	双边/Double thread Φ8.2牙 M8×1.0 通孔/Through Φ4.6	双边/Double thread Φ8.2 通孔/Through Φ6.2	16	5.5	6	44	34	–	2.15	12	10	18.3	15
40	PT1/8	双边/Double thread Φ10牙 M8×1.25 通孔/Through Φ6.5	双边/Double thread Φ10 通孔/Through Φ8.2	20	7.5	6.5	52	40	–	2.25	16	14	21.3	16
50	PT1/4	双边/Double thread Φ11牙 M8×1.25 通孔/Through Φ6.5	双边/Double thread Φ11 通孔/Through Φ8.5	25	8.5	9.5	62	48	–	4.15	20	17	30	20
63	PT1/4	双边/Double thread Φ11牙 M8×1.25 通孔/Through Φ6.5	双边/Double thread Φ11 通孔/Through Φ8.5	25	8.5	9.5	75	60	–	3.15	20	17	28.7	20
80	PT3/8	双边/Double thread Φ14牙 M12×1.75 通孔/Through Φ9.2	双边/Double thread Φ14 通孔/Through Φ12.3	25	10.5	10	94	74	–	3.65	25	22	36	26
100	PT3/8	双边/Double thread Φ17.5牙 M14×2 通孔/Through Φ11.3	双边/Double thread Φ17.5 通孔/Through Φ14.2	30	13	10	114	90	–	3.65	32	27	35	26

感应开关/Sensor switch



相关尺寸/Specification

CS1-J

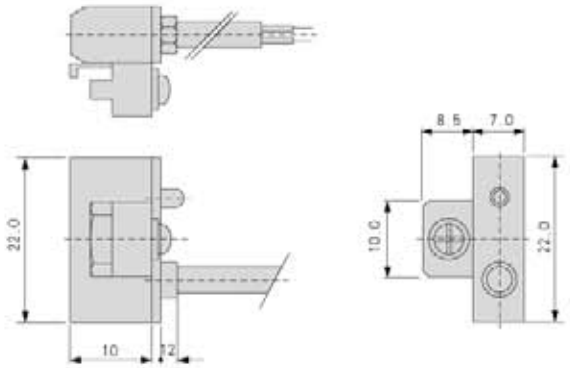

接线图/Wiring diagram

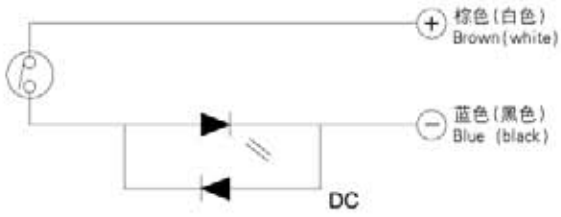

CS1-C

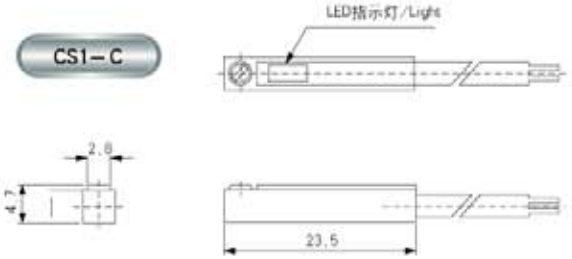

规　格/Specification

感应开关型式 Model	使用电压范围 Available voltage	使用电流范围 Available current	开关特性/Switch characteristic				使用温度范围 Available temperature	耐震程度/Seismic degree		指示灯 Light	电线 Wire	寿命 Life time
			反应时间 Reflect time	归位时间 Return time	释放时间 Breaking time	频率范围 Frequency range		非反复震动 Not vibration again and again	反复震动 Vibration again and again			
CS1-J	AC:5V~240V DC:5V~240V	AC:5~40mA DC:5~40mA	最大0.3ms MAX 0.3ms	最大0.3ms MAX 0.3ms	最大0.3ms MAX 0.3ms	3~250Hz	0~60℃	30G	最高(Highest) /7G(10~55HZ) 共振/Syntony 5300±300HZ	LED	2M	至少 500万次 At least 5 million times
CS1-G	AC:5V~240V DC:5V~240V	AC:5~40mA DC:5~40mA										

订购码/Ordering code

CS1 —— J

CS1 型号/Model
CS1气缸用磁性开关
CS1 Sensor switch

J 型式/Type
J:一般型/Normally type
G:埋入型/All in type

举例/Sample

1) 欲订购与超薄气缸配套的一般型磁感应开关。其正确的订购码代号为：CS1-J。
If user needs normal sensor switch which will be used for compact cylinder ,the correct code is :CS1-J.

2) 欲订购与超薄气缸配套的埋入型磁感应开关。其正确的订购码代号为：CS1-G。
If user needs inside type sensor switch which will be used for compact cylinder ,the correct code is :CS1-G.

安装与使用/Install&use

- 工作中负载有变化时，应选用输出力充裕的气缸；
  The load would be changed during working process,so the cylinder with enough output force should be chosen .
- 在高温或者腐蚀性条件下，应选用相应的耐高温或耐腐蚀性气缸；
  In the case of high temperature or corrosion environment ,operator is suggested to choose the cylinder with high-temp seals or corrosion resistance cylinder!
- 在温度大，粉尘多，或者有水滴，油尘，焊渣的场合，气缸应采取相应的防护措施
  In the high temperature ,much dust,water drops,oil dust or welding dregs environment ,the cylinder should be adopted necessary protection measure.
- 气缸接入管道前，必须清除管道内脏物，防止杂物进入气缸内；
  Before put in the air tube on the cylinder ,the inside surface of the pipe must be cleaned .In order to prevent sundries from entering into cylinder.
- 气缸使用介质应经过40um以上滤芯过滤后方可使用；
  The medium used by cylinder can not be put into use until it has pass filtering by certain filtering element above 40um.
- 因气缸前盖用活塞均较短，一般行程不可选择太大；
  Because the front and piston are very short ,so for this kind cylinder,large travel can not be selected.
- 在低温环境下，应采取抗冻措施，防止系统中的水分冻结；
  Under condition of low temperature ,the anti-freezing measure must be adopted ,so as to avoid freezing of engineering system.
- 气缸在工作过程中应尽可能避免受侧向载荷，以维持气缸的正常工作和使用寿命；
  During the working process ,the cylinder should be avoid side-load,in order to maintain normal working and assure the lifetime of the cylinder.
- 气缸拆下长时间不使用，要注意表面防锈，进排气口应加防尘堵塞帽，特别注意：前，后盖不可自行拆卸。
  If the cylinder has been out of work or stored for a long time ,operator should take notice ofsurface rustproof,the dust proof cap is suggested to be added at air in and out hole .Remark:without notice, operator can not dismantle the front and rear cover of the cylinder.

气缸理论出力表/Table for theoretic power of a cylinder

单位/Unit：牛顿(N)

气缸内径 Cylinder ID	活塞杆外径 Outdiameter of piston rod	动作型式/Action type		受压面积 Pressure area(cm^2)	空气压力/Air pressure(Kgf/cm^2)						
					0.1	0.2	0.3	0.4	0.5	0.6	0.7
12	6	压出单动/Single action(rear spring)		113.1	–	13.6	24.9	36.2	47.5	58.9	70.2
		引入单动/Single action(front spring)		84.8	–	8.0	16.4	24.9	33.4	41.9	50.4
		复动型 Double action	压侧/Push side	113.1	11.3	22.6	33.9	45.2	56.5	67.9	79.2
			拉侧/Pull side	84.8	8.5	17.0	25.4	33.9	42.4	50.9	59.4
16	6	压出单动/Single action(rear spring)		201.1	–	27.0	47.1	67.2	87.3	107.4	127.5
		引入单动/Single action(front spring)		150.8	–	17.0	32.0	47.1	62.2	77.3	92.4
		复动型 Double action	压侧/Push side	201.1	20.1	40.2	60.3	80.4	100.5	120.6	140.7
			拉侧/Pull side	150.8	15.1	30.2	45.2	60.3	75.4	90.5	105.6
20	10	压出单动/Single action(rear spring)		314.2	–	36.8	68.2	99.7	131.1	162.5	193.9
		引入单动/Single action(front spring)		235.6	–	21.2	44.7	68.2	91.8	115.4	138.9
		复动型 Double action	压侧/Push side	314.2	31.4	62.8	94.2	125.7	157.1	188.5	219.9
			拉侧/Pull side	235.6	23.6	47.1	70.7	94.2	117.8	141.4	164.9
25	12	压出单动/Single action(rear spring)		490.9	18.1	67.2	116.3	165.3	214.4	263.5	312.6
		引入单动/Single action(front spring)		377.8	6.8	44.6	82.3	120.1	157.9	195.7	233.4
		复动型 Double action	压侧/Push side	490.9	49.1	98.2	147.3	196.3	245.4	294.5	343.6
			拉侧/Pull side	377.8	37.8	75.6	113.3	151.1	188.9	226.7	264.4
32	16	压出单动/Single action(rear spring)		804.2	27.4	107.8	188.3	268.7	249.1	429.5	510.0
		引入单动/Single action(front spring)		603.2	7.3	67.6	128.0	188.3	248.6	308.9	369.2
		复动型 Double action	压侧/Push side	804.2	80.4	160.8	241.3	321.7	402.1	482.5	563.0
			拉侧/Pull side	603.2	60.3	120.6	181.0	241.3	301.6	361.9	422.2
40	16	压出单动/Single action(rear spring)		1256.6	44.7	170.3	296.0	421.7	547.3	673.0	798.6
		引入单动/Single action(front spring)		1055.6	24.6	130.1	235.7	341.2	446.8	552.3	657.9
		复动型 Double action	压侧/Push side	1256.6	125.7	251.3	377.0	502.7	628.3	754.0	879.6
			拉侧/Pull side	1055.6	105.6	211.1	316.7	422.2	527.8	633.3	738.9
50	20	压出单动/Single action(rear spring)		1963.5	96.3	292.7	489.0	685.4	881.7	1078.1	1274.4
		引入单动/Single action(front spring)		1649.3	64.9	229.9	394.8	559.7	724.7	889.6	1054.5
		复动型 Double action	压侧/Push side	1963.5	196.3	392.7	589.0	785.4	981.7	1178.1	1374.4
			拉侧/Pull side	1649.3	164.9	329.9	494.8	659.7	824.7	989.6	1154.5
63	20	压出单动/Single action(rear spring)		3117.2	141.7	453.4	765.2	1076.9	1388.6	1700.3	2012.1
		引入单动/Single action(front spring)		2803.1	110.3	390.6	670.9	951.2	1231.5	1511.9	1792.2
		复动型 Double action	压侧/Push side	3117.2	311.7	623.4	935.2	1246.9	1558.6	1870.3	2182.1
			拉侧/Pull side	2803.1	280.3	560.6	840.9	1121.2	1401.5	1681.9	1962.2
80	25	复动型 Double action	压侧/Push side	5026.5	502.7	1005.3	1508.0	2010.6	2513.3	3015.9	3518.6
			拉侧/Pull side	4535.7	453.6	907.1	1360.7	1814.3	2267.8	2721.4	3175.0
100	32	复动型 Double action	压侧/Push side	7854.0	785.4	1570.8	2356.2	3141.6	3927.0	4712.4	5497.8
			拉侧/Pull side	7049.7	705.0	1409.9	2114.9	2819.9	3524.9	4229.8	4934.8

超薄气缸CQ系列
COMPACT CYLINDER CQ SERIES

BANGYE®

产品特性/Product features

- 执行JIS标准
  Complies with JIS standard.
- 缸体与后盖，活塞与活塞杆采用铆合结构，紧凑可靠；
  Riveted construction is adopted to the connection between thetube and back cover,the piston and piston rod,make the cylinder compact and reliable.
- 缸体内径滚压处理后再作硬质氧化处理，耐磨，耐久性好；
  The surface treatment of tube inner surface is rolling first and then hard anodizing treatment ,abrasion resistance and durability good.
- 活塞密封采用异型双向密封结构，尺寸紧凑，有储油功能；
  The piston seals adopt heterogeneous two-way seal structure.It has compact dimension and the function of oil reservation.
- 紧凑型结构，能有效节省安装空间；
  The compact structure can effectively save the space for installation.
- 缸体周边带有磁感应开关槽，安装感应开关方便；
  Sensor slots around the cylinder body,easy to install the sensor switch.
- 多种规格安装附件可供选择；
  Various mounting kits are available.



符号/Symbol

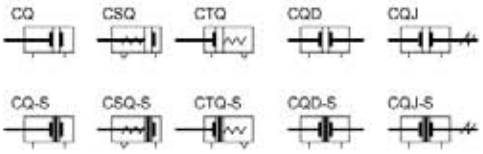

规　格/Specification

内径/Bore (mm)		12	16	20	25	32	40	50	63	80	100
动作型式/Action type		复动型/Double action									
		单动押出型/Single action(rear spring)				单动引入型/Single action(front spring)				—	
工作介质/Work medium		空气/Filtered air									
使用压力范围 Operation pressure range	复动型/Double action	0.1～1.0MPa(14～145Psi)									
	单动型/Single action	0.2～1.0MPa(28～145Psi)									
保证耐压力/Proof pressure		1.5MPa(215Psi)									
工作温度/Work temperature ℃		-20～80									
使用速度范围/Operation speed (mm/s)		复动型/Double action:30～500					单动型/Single action:50～500				
行程公差范围/Travel tolerance		行程/Travel≤150 $^{+1.0}_{0}$					行程/Travel>150 $^{+1.4}_{0}$				
缓冲型式/Cushioning		防撞垫/Cushion mat									
接管口径/Port size ①		M5X0.8				PT1/8		PT1/4		PT3/8	

①接管牙型有NPT、G牙可供选择；/Port size:NPT and G thread also available

行 程/Travel

内径/Bore (mm)		标准行程/Standard travel (mm)	最大行程 Max travel	容许行程/Available travel	
				不附磁 Without magnet	附磁/Magnet
12	复动/Double action	5 10 15 20 25 30 35 40 45 50	50	80	70
	单动/Single action	5 10 15 20	20	–	–
12	复动/Double action	5 10 15 20 25 30 35 40 45 50 55 60	60	80	70
	单动/Single action	5 10 15 20	20	–	–
20	复动/Double action	5 10 15 20 25 30 35 40 45 50 55 60 70 75 80 90 100	100	130	130
25	单动/Single action	5 10 15 20 25 30	30	–	–
32 40 50	复动/Double action	5 10 15 20 25 30 35 40 45 50 55 60 70 75 80 90 100	100	150	150
63 80 100	单动/Single action	5 10 15 20 25 30	30	–	–

注：1，在容许行程范围内，当行程>最大行程时，作非标处理；其它特殊行程请与本公司联系。
Within allowable travel range,when the travel is larger than the max travel range,it is the non-standard cylinder .Please contact our company for special travel. Various mounting kits are available.

2，最大行程范围内的非标行程以上一级标准行程改制而成，其外形尺寸为上一级标准行程气缸的外形尺寸。
如行程为23的非标行程气缸是由标准行程为25的标准气缸改制而成，其外形尺寸与其相同。
The non-standard travel within the range of max travel is transformed according to the standard travel of the upper grade and they have the same shape and dimension.For example,the non-standard travel cylinder whose travel is 23 is transformed from the standard cylinder whose standard stroke is 25,so these two cylinders have the same shape and dimension.

订购码/Ordering code

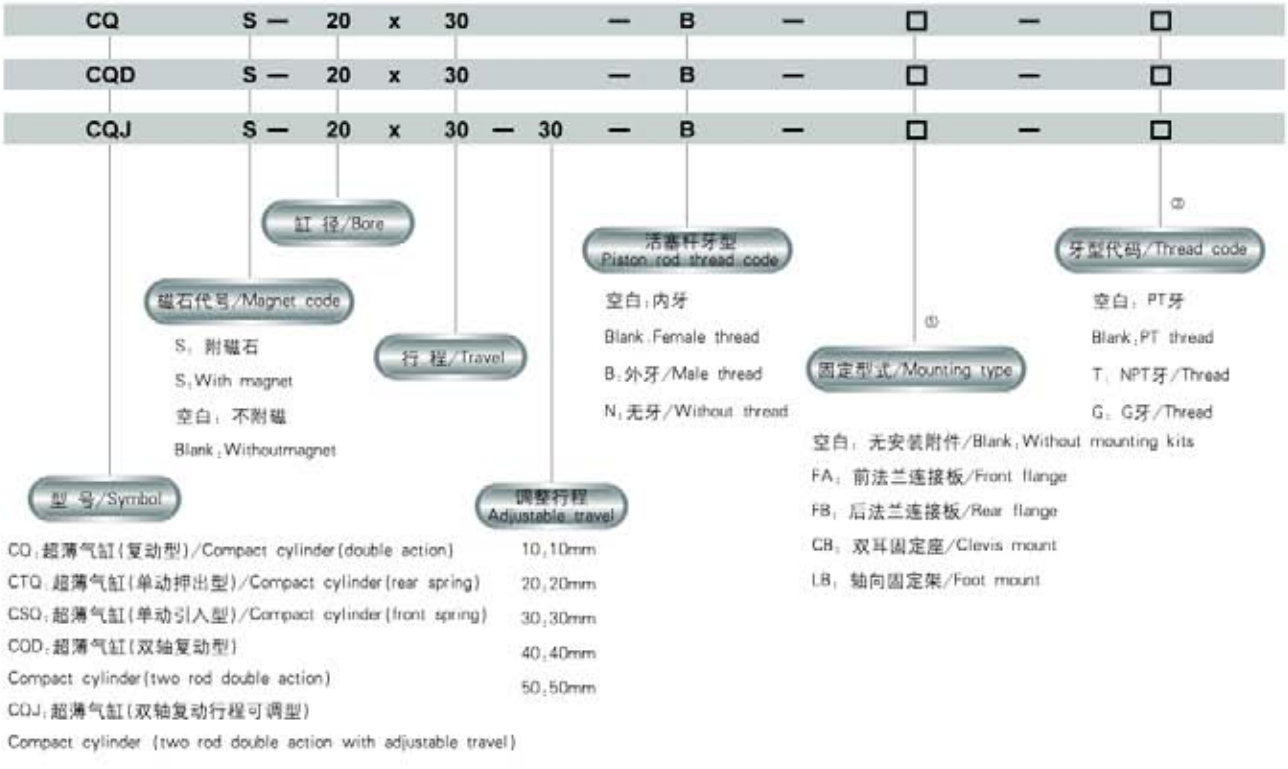

内部结构及主要零件材质/Inner structure and material list for main parts

CQ型/Series

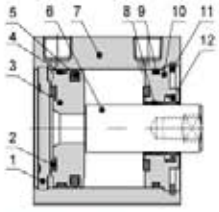

CQS型/Series

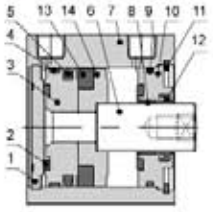

序号/Item	名称/Name	材质/Material
1	后盖/Back cover	无/NO(Φ12 16)\铝合金(其它)/Aluminium alloy or others
2	防撞垫(环)/Cushioning mat	TPU(Φ12-25)\NBR(其它)/NBR or others
3	活塞/Piston	黄铜/brass(Φ12 16)\铝合金(其它)/Aluminium or others
4	耐磨垫(环)/Wearing ring	无/NO(Φ12 16)\耐磨材料(其它)/Wear resistance material or others
5	活塞O令/Piston o-ring	NBR
6	活塞杆/Piston rod	S45C镀硬铬研磨棒/S45C hard chrome plated
7	本体/Body	铝合金/Aluminium alloy
8	衬套/Bush	无/NO(Φ12 16)\耐磨材料(其它)/Wear resistance material or others
9	O形环/O-ring	NBR
10	前盖/Front cover	黄铜/brass(Φ12 16)\铝合金(其它)/Aluminium alloy or others
11	C型扣环/C Type clip	弹簧钢/Spring brass
12	前后O令/Front and read O-ring	NBR
13	磁铁/Magnet	烧结加铁硼/Sintering neodymium iron boron(Φ12-25)\塑料(其它)/Plastic or others
14	磁铁座/Magnet base	黄铜/Brass(Φ12 16)\铝合金(其它)/Aluminium alloy or others

外部规格/Outside dimension

型号/Model:CQ

Φ12—Φ16

标准型/Standard

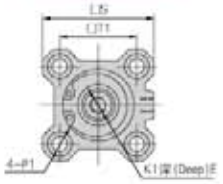

附磁型/Magnet

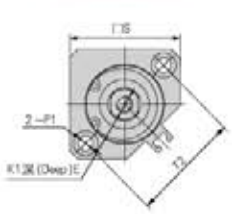

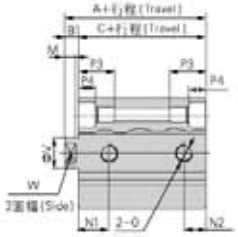

Φ20—Φ25

标准型/Standard

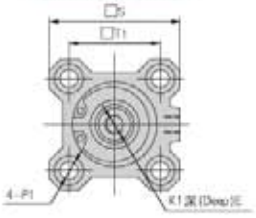

附磁型/Magnet

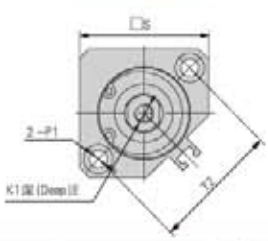

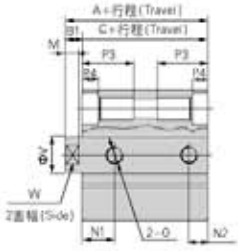

型号/Model	标准型/Standard				附磁型/Magnet		B1	D	E	K1	M	N1		N2	
符号/Symbol	A		C		A	C						标准型 Standard	附磁型 Magnet	标准型 Standard	附磁型 Magnet
缸径/Bore	行程(Travel)≤50	行程(Travel)≥60	行程(Travel)≤50	行程(Travel)≥60											
12	20.5	–	17	–	31.5	28	3.5	–	8	M3X0.5	3.5	7.5	9	5	7
16	22	–	18.5	–	34	30.5	3.5	–	8	M4X0.7	3	8	9.5	5.5	
20	24	34	19.5	29.5	36	31.5	4.5	–	7	M5X0.8	4	9	9.5	5.5	
25	27.5	37.5	22.5	32.5	37.5	32.5	5	–	12	M6X1.0	4.5	11		5.5	

缸径/符号(Bore/Symbol)	O	P1	P3	P4	S	T1	T2	V	W
12	M5X0.8	双边/Double thread,Φ6.5 牙,M4x0.7 通孔/Through,Φ3.4	11	3.5	25	15.5	22	6	5
16	M5X0.8	双边/Double thread,Φ6.5 牙,M4x0.7 通孔/Through,Φ3.4	11	3.5	29	20	28	8	6
20	M5X0.8	双边/Double thread,Φ9 牙,M6x1.0 通孔/Through,Φ5.2	17	7	36	25.5	36	10	8
25	M5X0.8	双边/Double thread,Φ9 牙,M6x1.0 通孔/Through,Φ5.2	17	7	40	28	40	12	10

Φ32～Φ100

(行程/Travel≤100)

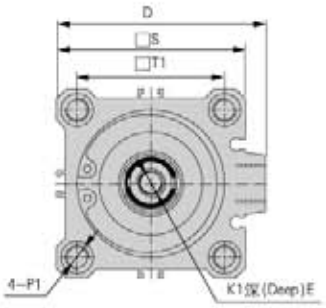

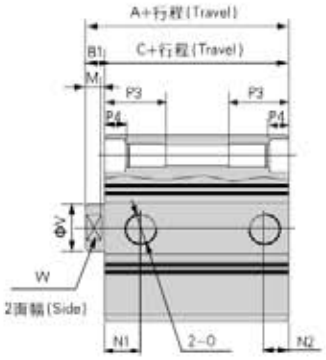

缸径/符号(Bore/Symbol)	O	P1	P3	P4	S	T1	T2	V	W
32	PT1/8	双边/Double thread,Φ9 牙,M6x1.0 通孔/Through, Φ5.2	17	7	45	34	–	16	14
40	PT1/8	双边/Double thread,Φ9 牙,M6x1.0 通孔/Through, Φ5.2	17	7	53	40	–	16	14
50	PT1/4	双边/Double thread,Φ11 牙,M8x1.25 通孔/Through, Φ6.5	22	8	64	50	–	20	17
63	PT1/4	双边/Double thread,Φ14 牙,M10x1.5 通孔/Through, Φ8.7	28.5	10.5	77	60	–	20	17
80	PT3/8	双边/Double thread,Φ17.5 牙,M12x1.75 通孔/Through, Φ10.7	35.5	13.5	98	77	–	25	22
100	PT3/8	双边/Double thread,Φ17.5 牙,M12x1.75 通孔/Through, Φ10.7	35.5	13.5	117	94	–	32	27

型号/Symbol		标准型/Standard				附磁型/Magnet		B1	D	E	K1	M	N1		N2	
符号/Symbol		A		C		A	C						标准 Standard	附磁 Magnet	标准 Standard	附磁 Magnet
缸径/Bore		行程(Travel)≤50	行程(Travel)>50	行程(Travel)≤50	行程(Travel)>50											
32	行程(Travel)=5	30	40	23	33	40	33	7	49.5	13	M8X1.25	6	7.5	10.5	6.5	7.5
	行程(Travel)>5												10.5		7.5	
40		36.5	46.5	29.5	39.5	46.5	39.5	7	57	13	M8X1.25	6	11		8	
50	行程(Travel)=5	38.5	48.5	30.5	40.5	48.5	40.5	8	71	15	M10X1.5	6.5	9	10.5	9	10.5
	行程(Travel)>5												10.5		10.5	
63	行程(Travel)=5	44	54	36	46	54	46	8	84	15	M10X1.5	6.5	14	15	8.5	10.5
	行程(Travel)>5												15		10.5	
80		53.5	63.5	43.5	53.5	63.5	53.5	10	104	20	M16X2.0	8.5	116		14	
100		65	75	53	63	75	63	12	123.5	26	M20X2.5	9.5	20		17.5	

超薄气缸CQ系列
COMPACT CYLINDER CQ SERIES

BANGYE®

型号/Model:CSQ 型号/Model:CTQ

Φ12~Φ16 标准型/Standard 附磁型/Magnet

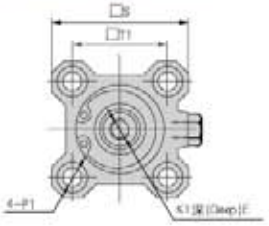

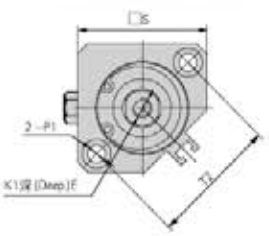

CSQ

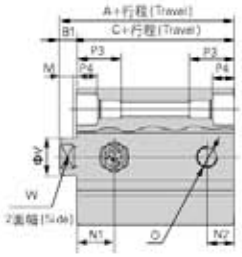

CTQ

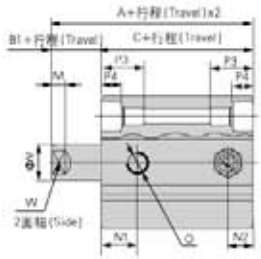

Φ20~Φ25 标准型/Standard 附磁型/Magnet

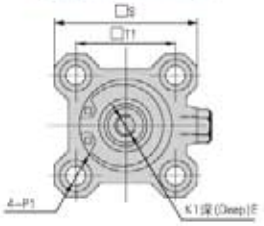

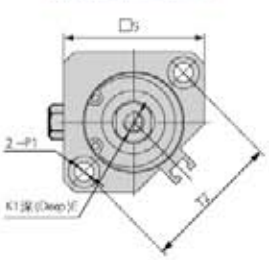

CSQ

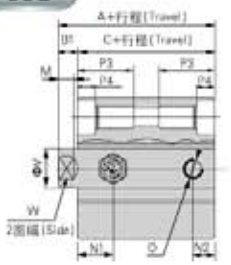

CTQ

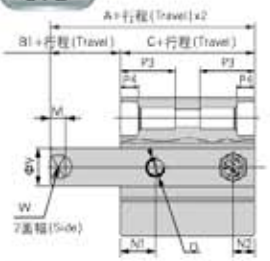

Φ32~Φ63 CSQ CTQ

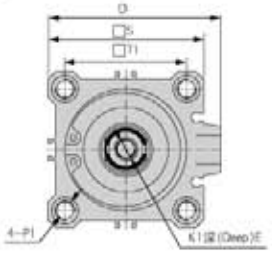

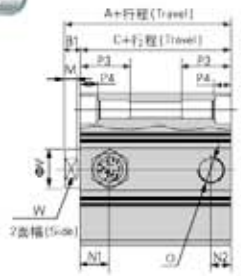

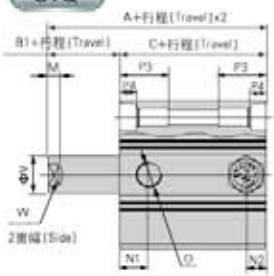

型式/Symbol	附磁/Magnet						不附磁/Without magnet											
内径/符号(Bore/Symbol)	A			C			A			C			B1	D	E	K1	M	O
行程/Travel	5/10	15/20	25/30	5/10	15/20	25/30	5/10	15/20	25/30	5/10	15/20	25/30						
12	36.5	41.5	–	33	38	–	25.5	30.5	–	22	27	–	3.5	–	6	M3X0.5	3.5	M5X0.8
16	39	44	–	35.5	40.5	–	27	32	–	23.5	28.5	–	3.5	–	8	M4X0.7	3	M5X0.8
20	41	46	51	36.5	41.5	46.5	29	34	39	24.5	29.5	34.5	4.5	–	7	M5X0.8	4	M5X0.8
25	42.5	47.5	52.5	37.5	42.5	47.5	32.5	37.5	42.5	27.5	32.5	37.5	5	–	12	M6X1.0	4.5	M5X0.8
32	45	50	55	38	43	48	35	40	45	28	33	38	7	49.5	13	M8X1.25	6	PT1/8
40	51.5	56.5	61.5	44.5	49.5	54.5	41.5	46.5	51.5	34.5	39.5	44.5	7	57	13	M8X1.25	6	PT1/8
50	58.5	63.5	68.5	50.5	55.5	60.5	48.5	53.5	58.5	40.5	45.5	50.5	8	71	15	M10X1.5	6.5	PT1/4
63	64	69	74	56	61	66	54	59	64	46	51	56	8	84	15	M10X1.5	6.5	PT1/4

型式/Symbol										标准型 Standard	附磁型 Magnet	标准型 Standard	附磁型 Magnet
缸径/符号(Bore/Symbol)	P1	P3	P4	S	T1	T2	V	W	N1		N2		
12	双边/Double thread Φ6.5 牙:M4x0.7 通孔/Through Φ3.4	11	3.5	25	15.5	22	6	5	7.5	9	5	7	
16	双边/Double thread Φ6.5 牙:M4x0.7 通孔/Through Φ3.4	11	3.5	29	20	28	8	6	8	9.5	5.5		
20	双边/Double thread Φ9 牙:M5x1.0 通孔/Through Φ5.2	17	7	36	25.5	36	10	8	9	9.5	5.5		
25	双边/Double thread Φ9 牙:M5x1.0 通孔/Through Φ5.2	17	7	40	28	40	12	10	11		5.5		
32	双边/Double thread Φ9 牙:M5x1.0 通孔/Through Φ6.2	17	7	45	34	–	16	14	10.5		7.5		
40	双边/Double thread Φ9 牙:M5x1.0 通孔/Through Φ6.2	17	7	53	40	–	16	14	11		8		
50	双边/Double thread Φ11 牙:M8x1.25 通孔/Through Φ6.5	22	8	64	50	–	20	17	10.5		10.5		
63	双边/Double thread Φ14 牙:M10x1.5 通孔/Through Φ8.7	28.5	10.5	77	60	–	20	17	15		10.5		

外牙型尺寸/Male thread dimension

(缸径/Bore:Φ12～Φ100，行程/Travel≤100)

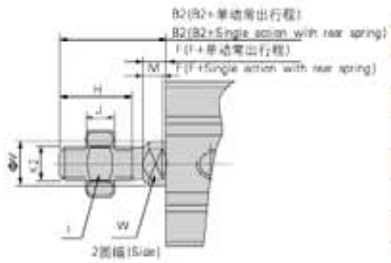

缸径/符号(Bore/Symbol)	B2	F	H	I	J	K2	M	V	W
12	14	3.5	9	8	4	M5X0.8	3.5	6	5
16	15.5	3.5	10	10	5	M6X1.0	3	8	6
20	18.5	4.5	12	12	6	M8X1.25	4	10	8
25	22.5	5	15	17	6	M10X1.25	4.5	12	10
32	28.5	5	20.5	19	8	M14X1.5	4	16	14
40	28.5	5	20.5	19	8	M14X1.5	4	16	14
50	33.5	5	26	27	11	M18X1.5	4	20	17
63	33.5	5	26	27	11	M18X1.5	4	20	17
80	43.5	8	32.5	32	13	M22X1.5	5.5	25	22
100	43.5	8	32.5	36	13	M26X1.5	6	32	27

型号/Model:CQD

Φ12～Φ16 标准型/Standard

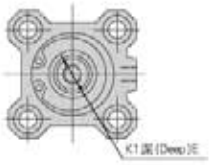

附磁型/Magnet

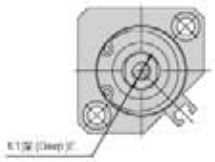

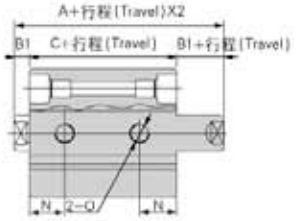

Φ20～Φ25 标准型/Standard

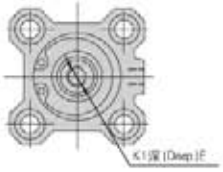

附磁型/Magnet

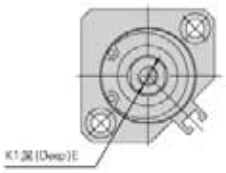

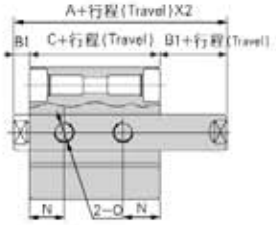

Φ32～Φ100

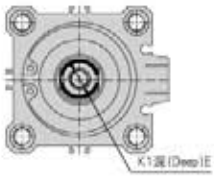

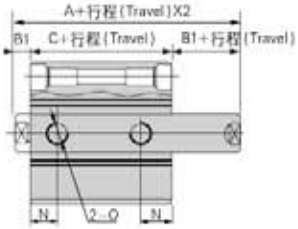

型式/Symbol	标准型/Standard		附磁型/Magnet		B1	E	N
缸径/符号(Bore/Symbol)	A	C	A	C			
12	32.2	25.2	39.4	32.4	3.5	6	9
16	33	26	43	36	3.5	8	9.5
20	35	26	47	38	4.5	7	9.5
25	39	29	49	39	5	9.5(S=5)12(S>5)	11
32	44.5	30.5	54.5	40.5	7	9(S≤10)13(S>10)	10
40	54	40	64	50	7	11(S≤10)13(S>10)	13
50	56.5	40.5	66.5	50.5	8	12(S≤10)15(S>10)	13.5
63	58	42	68	52	8	12(S≤10)15(S>10)	14.4(S=5)16(S>5)
80	71	51	81	61	10	14(S≤15)20(S>15)	16
100	84.5	60.5	94.5	70.5	12	20(S≤25)26(其它)	21

注：未注明之尺寸与标准型相同，外牙型尺寸请参考本页上部内容。

Remark:Unmarked dimension is the same as standard cylinder.For the dimension of male thread,please check upside of this page.

外牙型尺寸/Male thread dimension

型号/Model CQJ

Φ12~Φ16

标准型/Standard

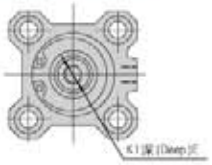

附磁型/Magnet

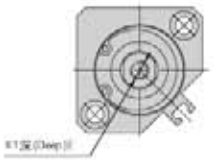

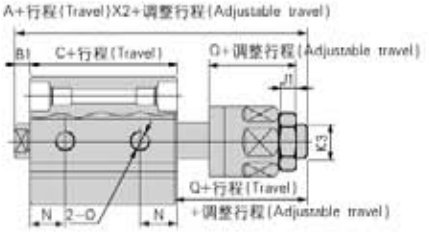

Φ20~Φ25

标准型/Standard

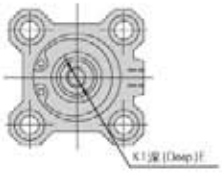

附磁型/Magnet

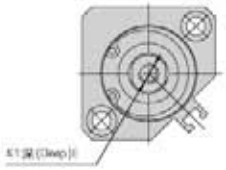

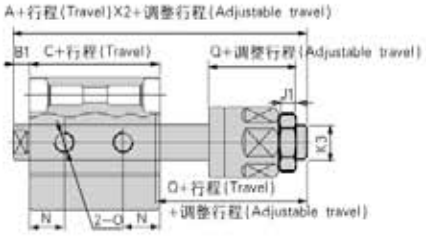

Φ32~Φ100

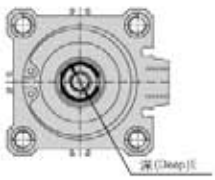

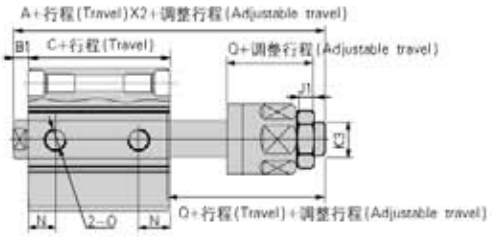

型式/Symbol	标准型 / Standard		附磁型/Magnet		B1	E	N	Q	J1	K3
缸径/符号(Bore/Symbol)	A	C	A	C						
12	45.2	25.2	52.4	32.4	3.5	6	9	17	4	M5X0.8
16	50	26	60	36	3.5	8	9.5	21	5	M6X1.0
20	55	26	67	38	4.5	7	9.5	25	6	M8X1.25
25	60.5	29	70.5	39	5	9.5(S=5) 12(S>5)	11	27	6	M10X1.25
32	64.9	30.5	74.9	40.5	7	9(S≤10) 13(S>10)	10	28	7	M12X1.25
40	74.5	40	84.5	50	7	11(S≤10) 13(S>10)	13	28	7	M12X1.25
50	77	40.5	87	50.5	8	12(S≤10) 15(S>10)	13.5	29	8	M16X1.5
63	78.4	42	88.4	52	8	12(S≤10) 15(S>10)	14.5(S=5) 16(S>5)	29	8	M16X1.5
80	95.8	51	105.8	61	10	14(S≤15) 20(S>15)	16	35.5	10	M20X1.5
100	114.3	60.5	124.3	70.5	12	20(S≤25) 26(其它/others)	21	42.5	13.5	M27X2.0

CQ系列(长行程型)/SERIES(LONG TRAVEL)

产品特性/Product features

- 执行JIS标准，长行程型；
  Complies with JIS standard,long travel.
- 缸体与前，后盖采用C形扣环固定，活塞与活塞杆采用铆合结构，紧凑可靠；
  The cylinder body and front cover and back cover are fixed by C clip, riveted construction is adopted to the connection between the the piston and piston rod,make the cylinder compact and reliable.
- 缸体内径行磨处理，耐磨，耐久性好；
  The surface treatment of tube inner surface is adopted honing treatment, abrasion resistance and durability good.
- 前盖导向距离加长，导向性能好；
  The guide distance of front cover is longer so as to make the cylinder have a good guidance function.
- 紧凑型结构，能有效节省安装空间；
  The compact structure can effectively save the space for installation.
- 缸体周边带有磁感应开关槽，安装感应开关方便；
  Sensor slots around the cylinder body,easy to install the sensor switch.
- 多种规格安装附件可供选择；
  Various mounting kits are available.



符号/Symbol

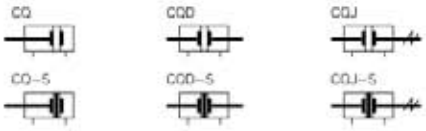

规　格/Specification

内径/Bore (mm)	32	40	50	63	80	100
动作型式/Action type	复动型/Double action					
工作介质/Work medium	空气/Filtered air					
使用压力范围/Operation pressure range	0.1～1.0MPa(14～145Psi)					
保证耐压力/Proof pressure	1.5MPa(215Psi)					
工作温度/Work temperature ℃	-20～80					
使用速度范围/Operation speed (mm/s)	30～500					
行程公差范围/Travel tolerance	$101-150^{+1.0}_{0}$			$>150^{+1.4}_{0}$		
缓冲型式/Cushioning	防撞垫/Cushion mat					
接管口径/Port size ①	PT1/8		PT1/4		PT3/8	

①接管牙型有NPT，G牙可供选择；/Port size:NPT and G thread also available

行　程/Travel

内径/Bore (mm)	标准行程/Standard travel (mm)	最大行程 Max travel	容许行程/Available travel
32 40 50 63 80 100	125 150 175 200 225 250 275 300	300	350

注：1．在容许行程范围内，当行程>最大行程时，作非标处理，其它特殊行程请与本公司联系。
Remark:Within allowable travel range,when the travel is larger than the max travel range,it is the non-standard cylinder.Please contact our company for special travel.

CQ系列(长行程型)/SERIES(LONG TRAVEL)

订购码/Ordering code

CQ	S	—	50	x	150		—	B	—	□	—	□
CQD	S	—	50	x	150		—	B	—	□	—	□
CQJ	S	—	50	x	150	— 30	—	B	—	□	—	□

型 号/Symbol

CQ：超薄气缸（复动型）
Compact cylinder(double action)
CQD：超薄气缸（双轴复动型）
Compact cylinder(two rod double action)
CQJ：超薄气缸（双轴复动行程可调型）
Compact cylinder (two rod double action with adjustable travel)

磁石代号/Magnet code

S：附磁石
S：With magnet
空白：不附磁
Blank：Withoutmagnet

缸径/Bore

行程/Travel

调整行程 Adjustable travel

10：10mm
20：20mm
30：30mm
40：40mm
50：50mm
75：75mm
100：100mm

活塞杆牙型/Piston rod thread code

空白：内牙
Blank：Female thread
B：外牙/Male thread
N：无牙/Without thread

固定型式/Mounting type ①

空白：无安装附件
Blank：Without mounting kits
FA：前法兰连接板/Front flange
FB：后法兰连接板/Rear flange
CB：双耳固定座/Clevis mount
LB：轴向固定架/Foot mount

牙型代码 Thread code

空白：PT牙
Blank：PT thread
T：NPT牙/Thread
G：G牙/Thread

外部规格/Outside dimension

型号/Model：CQ

Φ32～Φ100（行程/Travel>100）

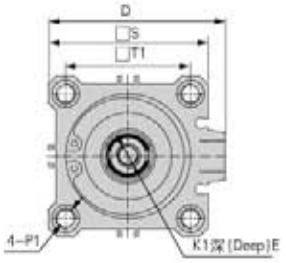

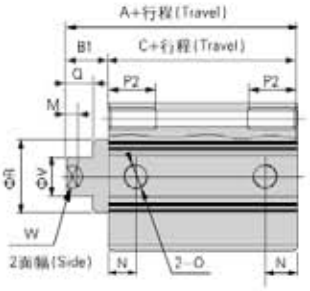

缸径/符号(Bore/Symbol)	A	B1	C	D	E	K1	M	N
32	62.5	17	45.5	49.5	13	M8X1.25	6	12.5
40	72	17	55	57	13	M8X1.25	6	14
50	73.5	18	55.5	71	15	M10X1.5	6.5	14
63	75	18	57	84	15	M10X1.5	6.5	16.5
80	86	20	66	104	21	M16X2.0	8.5	19
100	97.5	22	75.5	123.5	27	M20X2.5	9.5	23

缸径/符号(Bore/Symbol)	O	P1	P2	Q	R	S	T1	V	W
32	PT1/8	双边/Double thread,M6x1.0 通孔/Through,Φ5.2	10	12	22	45	34	16	14
40	PT1/8	双边/Double thread,M6x1.0 通孔/Through,Φ5.2	10	12	28	53	40	16	14
50	PT1/4	双边/Double thread,M8x1.25 通孔/Through,Φ6.5	14	13	35	64	50	20	17
63	PT1/4	双边/Double thread,M10x1.5 通孔/Through,Φ8.7	18	16	35	77	60	20	17
80	PT3/8	双边/Double thread,M12x1.75 通孔/Through,Φ10.7	22	15	43	98	77	25	22
100	PT3/8	双边/Double thread,M12x1.75 通孔/Through,Φ10.7	22	17	59	117	94	32	27

CQ系列(长行程型)/SERIES(LONG TRAVEL)

外牙型尺寸/Male thread dimension

(缸径/Bore Φ12～Φ100，行程/Travel>100，加长型/Lengthen type)

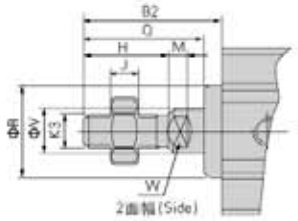

缸径/符号(Bore/Symbol)	B2	H	J	K2	M	Q	R	V	W
32	38.5	23.5	8	M14X1.5	6	33.5	22	16	14
40	38.5	23.5	8	M14X1.5	6	33.5	28	16	14
50	43.5	28.5	11	M18X1.5	6.5	38.5	35	20	17
63	43.5	28.5	11	M18X1.5	6.5	38.5	35	20	17
80	53.5	35.5	13	M22X1.5	8.5	48.5	43	25	22
100	53.5	35.5	13	M26X1.5	10	48.5	59	32	27

型号/Model:CQJ

Φ32～Φ100 (行程/Travel>100)

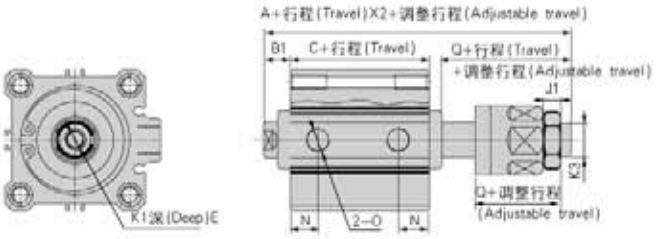

型号/Model:CQD

Φ32～Φ100 (行程/Travel>100)

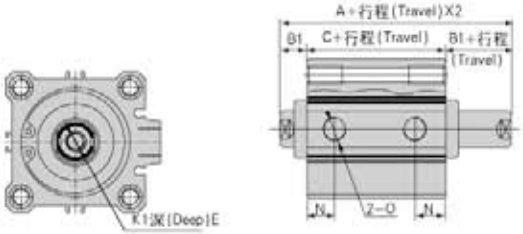

符号 Symbol / 缸径 Bore	标准型/Standard			附磁型/Magnet			B1	E	N	Q	J1	K3
	A		C	A		C						
	CQD	CQJ		CQD	CQJ							
32	79.5	95.5	45.5	89.5	105.5	55.5	17	13	12.5	28	7	M12X1.25
40	89	105	55	99	115	65	17	13	14	28	7	M12X1.25
50	91.5	107.5	55.5	101.5	117.5	65.5	18	15	14	29	8	M16X1.5
63	93	109	57	103	119	67	18	15	16.5	29	8	M16X1.5
80	106	126.5	66	116	136.5	76	20	21	19	35.5	10	M20X1.5
100	119.5	145	75.5	129.5	155	85.5	22	27	23	42.5	13.5	M27X2.0

注：未注明之尺寸与标准型相同，外牙型尺寸请参考本页上部内容。
Remark:Unmarked dimension is the same as standard cylinder. For the dimension of male thread ,please check upside of this page.

附 件/Mounting kits

附件订购码/Mounting kits ordering code

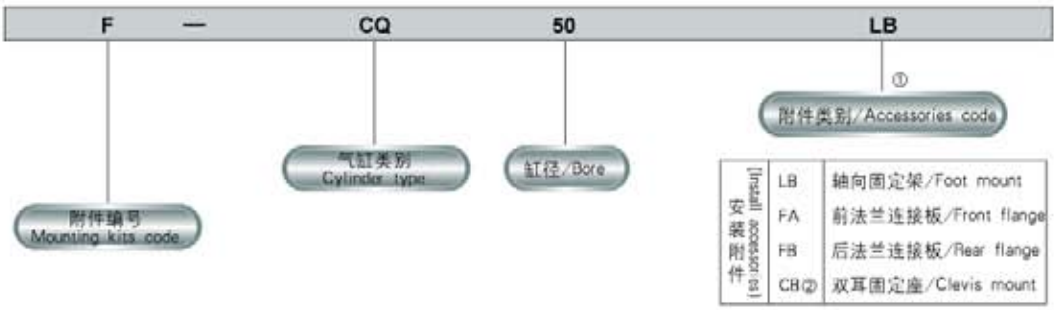

附件选配/Mounting kits choose

气缸型号/Cylinder model \ 附件/Mounting kits			安装附件/Install accessories				连接附件/Connector kits①				感应开关/Sensor switch②	
			LB	EA	FB	CB	I	Y	F	U	CS1-J	CS1-G
CQ	内牙型 Female thread	标准型/Standard	●	●	●	●	X				X	
		附磁型/Magnet	●	●	●	●	X				●	
	外牙型 Male thread	标准型/Standard	●	●	●	●	●				X	
		附磁型/Magnet	●	●	●	●	●				●	
CSQ CTQ	内牙型 Female thread	标准型/Standard	●	●	●	●	X				X	
		附磁型/Magnet	●	●	●	●	X				●	
	外牙型 Male thread	标准型/Standard	●	●	●	●	●				X	
		附磁型/Magnet	●	●	●	●	●				●	
CQD	内牙型 Female thread	标准型/Standard	●	●	●	X	X				X	
		附磁型/Magnet	●	●	●	X	X				●	
	外牙型 Male thread	标准型/Standard	●	●	●	X	●				X	
		附磁型/Magnet	●	●	●	X	●				●	
CQJ	内牙型 Female thread	标准型/Standard	●	●	●	X	X				X	
		附磁型/Magnet	●	●	●	X	X				●	
	外牙型 Male thread	标准型/Standard	●	●	●	X	●				X	
		附磁型/Magnet	●	●	●	X	●				●	

附件材质/Accessories material

附件 Mounting kits / 缸径/Bore	安装附件/Install accessories				接头/Joint			
	FA	FB	CB	LB	Y	I	F	U
12-16	铝合金/Aluminium alloy		铝合金 Aluminium alloy	SPCC	S45C	S45C		
20、25	灰口铸铁/Grey cast iron							
32-100			铸铜/Cast copper		铸铜/Cast copper			

附 件/Mounting kits

外部规格/Outside dimension

型号/Model：FA、FB

Φ12～Φ25

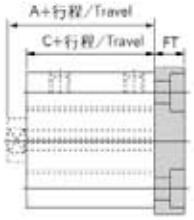

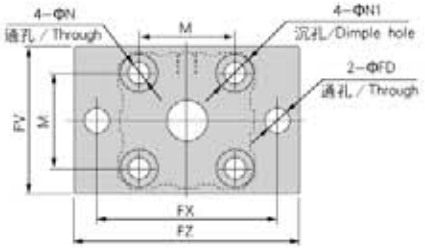

Φ32～Φ100

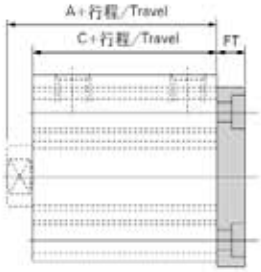

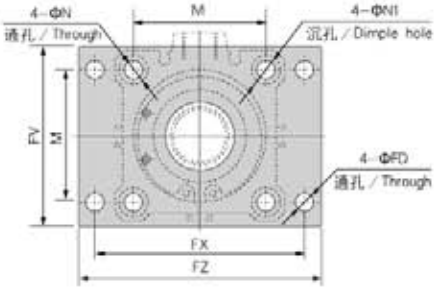

缸径/符号 (Bore/Symbol)	标准型 / Standard				附磁型/Magnet		M	N	N1	FD	FT	FV	FX	FZ
	A		C		A	C								
行程/Travel	≤50	>60	≤50	>60										
12	20.5	–	17	–	31.5	28	15.5	4.5	7.5	4.5	5.5	25	45	55
16	22	–	18.5	–	34	30.5	20	4.5	7.5	4.5	5.5	30	45	55
20	24	34	19.5	29.5	36	31.5	25.5	6.5	10.5	6.5	8	39	48	60
25	27.5	37.5	22.5	32.5	37.5	32.5	28	6.5	10.5	6.5	8	42	52	64
32	30	40	23	33	40	33	34	6.5	10.5	6.5	8	48	56	65
40	36.5	46.5	29.5	39.5	46.5	39.5	40	6.5	10.5	6.5	8	54	62	72
50	38.5	48.5	30.5	40.5	48.5	40.5	50	8.5	13.5	8.5	9	67	76	89
63	44	54	36	46	54	46	60	10.5	16.5	9	9	80	92	108
80	53.5	63.5	43.5	53.5	63.5	53.5	77	12.5	18.5	11	11	99	116	134
100	65	75	53	63	75	63	94	12.5	18.5	11	11	117	136	154

附 件/Mounting kits

型号/Model:LB

Φ12～Φ25

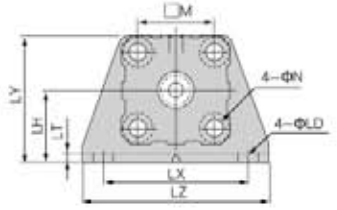

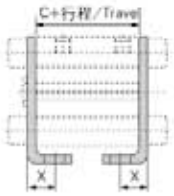

Φ32～Φ100

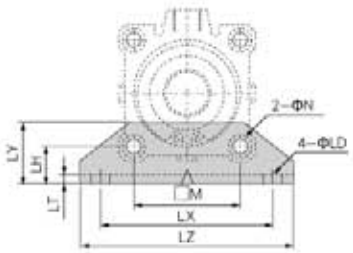

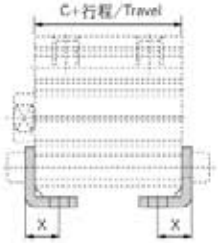

缸径/符号 (Bore/Symbol)	C ①			M	N	X	LD	LH	LT	LX	LY	LZ
	标准型 / Standard		附磁型 Magnet									
行程/Travel	≤50	≥60										
12	17	–	28	15.5	4.5	8	4.5	17	2	34	29.5	44
16	18.5	–	30.5	20	4.5	8	4.5	19	2	38	33.5	48
20	19.5	29.5	31.5	25.5	6.5	9.2	6.5	24	3	48	42	62
25	22.5	32.5	32.5	28	6.5	10.7	6.5	26	3	52	46	66
32	23	33	33	34	6.5	11.2	6.5	13	3	57	20	71
40	28.5	39.5	39.5	40	6.5	11.2	6.5	13	3	64	20	78
50	30.5	40.5	40.5	50	8.5	12.2	8.5	14	3	79	22	95
63	36	46	46	60	10.5	13.7	10.5	16	3	95	26	113
80	43.5	53.5	53.5	77	13	16.5	13	20.5	4.5	118	32	140
100	53	63	63	94	13	23	13	24	6	137	36	162

注：未注明之尺寸与标准型相同。外牙型尺寸请参考本页上部内容。
Remark:Unmarked dimension is the same as standard cylinder. For the dimension of male thread ,please check upside of this page.

附 件/Mounting kits

型号/Model: CB

Φ12~Φ25

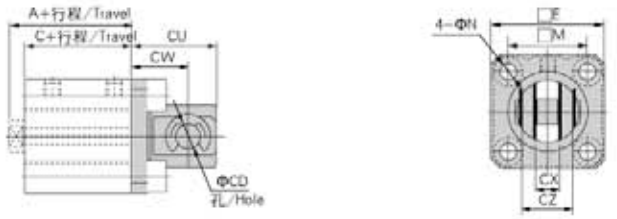

Φ32~Φ100

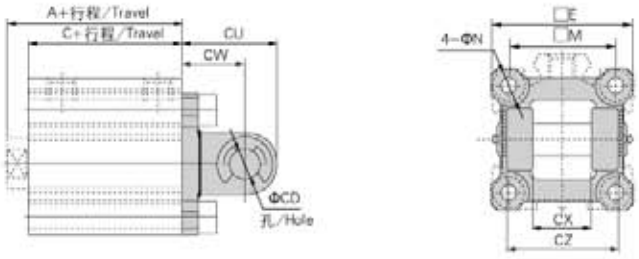

缸径/符号 (Bore/Symbol)	标准型 / Standard				附磁型/Magnet		E	M	N	CD	CU	CW	CX	CZ
	A①		C		A	C								
行程/Travel	≤50	>60	≤50	>60										
12	20.5	–	17	–	31.5	28	25	15.5	4.5	5	20	14	5.3	9.8
16	22	–	18.5	–	34	30.5	29	20	4.5	5	21	15	6.8	11.8
20	24	34	19.5	29.5	36	31.5	36	25.5	6.5	8	27	18	8.3	15.8
25	27.5	37.5	22.5	32.5	37.5	32.5	40	28	6.5	10	30	20	10.3	19.8
32	30	40	23	33	40	33	45.5	34	6.5	10	30	20	18.3	35.8
40	36.5	46.5	29.5	39.5	46.5	39.5	53.5	40	6.5	10	32	22	18.3	35.8
50	38.5	48.5	30.5	40.5	48.5	40.5	64.5	50	8.5	14	42	28	22.3	43.8
63	44	54	36	46	54	46	77.5	60	10.5	14	44	30	22.3	43.8
80	53.5	63.5	43.5	53.5	63.5	53.5	98.5	77	12.5	18	56	38	28.3	55.8
100	65	75	53	63	75	63	117.5	94	12.5	22	67	45	32.3	63.8

上表中的A、C值是ACQ系列之值，其余系列的A、C值请参考相应内容。
Value A and C in the above table is only for ACQ series,please refer to relevant content for value A and C of other series.

附件订购码列表/Accessory ordering code sheet

附件名称 Mounting kits / 缸径/Bore	安装附件/Install accessories				连接附件/Connector kits				感应开关 Sensor switch
	LB	FA	FB	CB	I,I接头/Joint	Y,Y接头 / Joint	F：浮动接头 Self-aligning bearings	U：鱼眼接头 Ball joint ends	
12	F-CQ12LB	F-CQ12FA		F-CQ12CB	F-M05080IQ	F-M05080YQ	–	F-M05080U	CS1-G
16	F-CQ16LB	F-CQ16FA		F-CQ16CB	F-M06100IQ	F-M06100YQ	–	F-M06100U	
20	F-CQ20LB	F-CQ20FA		F-CQ20CB	F-M08125IQ	F-M08125YQ	F-M08125F	F-M08125U	
25	F-CQ25LB	F-CQ25FA		F-CQ25CB	F-M10125IQ	F-M10125YQ	F-M10125F	F-M10125U	
32	F-CQ32LB	F-CQ32FA		F-CQ32CB	F-M14150IQ	F-M14150YQ	F-M14150F	F-M14150U	CS1-J CS1-G
40	F-CQ40LB	F-CQ40FA		F-CQ40CB					
50	F-CQ50LB	F-CQ50FA		F-CQ50CB	F-M18150IQ	F-M18150YQ	F-M18150F	F-M18150U	
63	F-CQ63LB	F-CQ63FA		F-CQ63CB					
80	F-CQ80LB	F-CQ80FA		F-CQ80CB	F-M22150IQ	F-M22150YQ	–	–	
100	F-CQ100LB	F-CQ100FA		F-CQ100CB	F-M26150IQ	F-M26150YQ	–	–	

安装与使用/Install&use

- 工作中负载有变化，应选用输出力充裕的气缸，在高温条件下，应选用相应的耐高温气缸。

  The load would be changed during working process,so the cylinder with enough output force should be chosen, on the case of high temperature,operator is suggested to choose the cylinder with high-temp seals!

- 气缸配管前，必须清除管道内的杂物，防止杂物进入气缸内。

  Before put in the air tube on the cylinder, the inside surface of the pipe must be cleaned.In order to prevent sundries from entering into cylinder.

- 气缸使用介质应经过40μm以上滤芯过滤后方可使用。

  The medium used by cylinder can not be put into use until it has pass filtering by certain filtering element above 40um.

- 在低温环境下，应采取抗冻措施，防止系统的水分结冰。

  Under condition of low temperature,the anti-freezing measure must be adopted,so as to avoid freezing of engineering system.

- 气缸拆下长时间不使用，要注意表面防锈，进排气口应加防尘堵塞帽。

  If the cylinder has been out of work for a long time,operator should take notice of surface rustproof,the dust proof cap is suggested to be added at air in and out hole .

产品系列/Products series

TN系列/Series　　感应开关/Sensor switch

固定方式/Install type

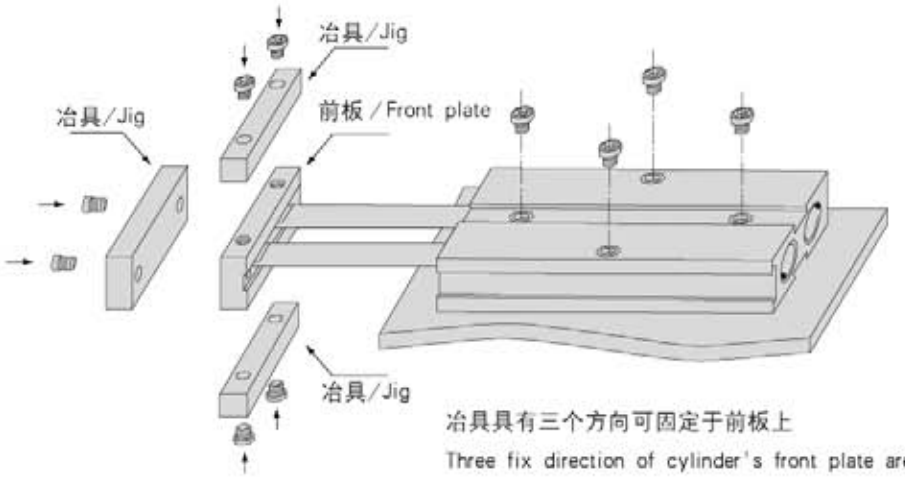

冶具具有三个方向可固定于前板上

Three fix direction of cylinder's front plate are available.

技术资料/Technical data

气缸理论出力计算方法/Formula for cylinder output power

$$F = 2 \times P \times A$$

- A：活塞受压面积/Piston pressed area (cm^2)
- P：工作压力/Working pressure (Kgf/cm^2)
- F：气缸理论出力/The output power of cylinder (Kgf)

气缸理论出力表/Table for theoretic power of a cylinder

气缸内径 Cylinder ID		10		16		20		25		32	
活塞杆外径 Out diameter of piston rod		6		8		10		12		16	
动作型式 Action type		复动型/Double action		复动型/Double action		复动型/Double action		复动型/Double action		复动型/Double action	
		压侧/Push side	拉侧/Pull side	压侧/Push side	拉侧/Pull side	压侧/Push side	拉侧/Pull side	压侧/Push side	拉侧/Pull side	压侧/Push side	拉侧/Pull side
受压面积 Pressure area (cm^2)		1.57	1.00	4.02	3.01	6.28	4.71	9.81	7.55	16.07	12.05
空气压力 Air pressure (Kgf/cm^2)	1	–	–	4.02	3.01	6.28	4.71	9.81	7.55	16.07	12.05
	2	3.14	2.00	8.04	6.02	12.56	9.42	19.62	15.10	32.14	24.10
	3	4.70	3.00	12.06	9.03	18.84	14.13	29.43	22.65	48.21	36.15
	4	6.28	4.00	16.08	12.04	25.12	18.84	39.24	30.20	64.28	48.20
	5	7.84	5.00	20.10	15.05	31.40	23.55	49.05	37.75	80.35	60.25
	6	9.42	6.00	24.12	18.06	37.68	28.26	58.86	45.30	96.42	72.30
	7	10.98	7.00	28.14	21.07	43.96	32.97	68.67	52.85	112.49	84.35

双轴气缸TN系列
DOUBLE ROD CYLINDER TN SERIES

BANGYE

产品特性/Product features

导 向 性/Guidance function

双活塞杆提供了高度的抗弯曲和扭转刚性，保证了气缸的使用寿命和卓越的导向性能。

Double piston rod have a good performance of bend and rotating resistance so as to assure the cylinder have longer life time and good guidance function.



易 安 装/Easy mounting

使用埋入式的安装方式，不需任何配件达到节省空间的要求

Female thread or through hole on the cylinder, easy mounting without more mounting kits so as to save the space.

磁性开关/Sensor switch mounting easily

在本体外围预留装配槽，使磁性开关在安装固定及位置调整时，均极其简单。

Sensor slots on the cylinder ,easy to install the sensor and adjust the sensor position.

易 维 修/Easy repair

采用简易的组装方式进行设计，方便装拆及维修。

Assembly process simply,easy to disassembly and repair.

符号/Symbol

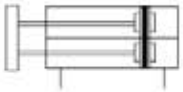

规　格/Specification

内径/Bore (mm)	10	16	20	25	32
动作型式/Action type	复动型/Double action				
工作介质/Work medium	空气/Filtered air				
使用压力范围/Operation pressure range(Kgf/cm²)	1～9				
保证耐压力/Proof pressure(Kgf/cm²)	13.5				
使用温度范围/Available temperature ℃	-5～70				
使用速度范围/Operation speed (mm/s)	100～500				
调整行程/Adjustable travel	-10～0				
缓冲型式/Cushioning	防撞垫片/Bumper				
不回转精度/None rotation precision	0.4°	0.3°			
接管口径/Port size	M5X0.8				PT1/8

行 程/Travel

内径/Bore	标准行程 / Standard travel	最大行程/Max travel	容许行程/Available travel
10	10 20 30 40 50 60 70	70	100
16	10 20 30 40 50 60 70 80 90 100 125 150	150	200
20	10 20 30 40 50 60 70 80 90 100 125 150	150	200
25	10 20 30 40 50 60 70 80 90 100 125 150	150	200
32	10 20 30 40 50 60 70 80 90 100 125 150	150	200

双轴气缸TN系列
DOUBLE ROD CYLINDER TN SERIES

BANGYE

订购码/Ordering code

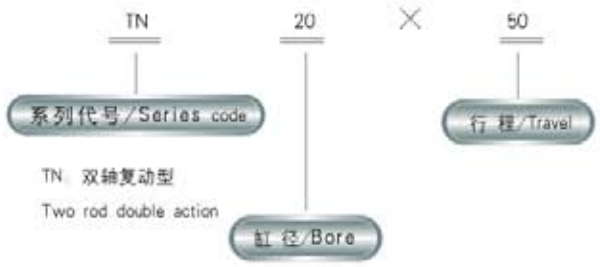

举例/Sample

1)欲订购缸径为20mm，行程为50mm的双轴复动型气缸，其正确的订购码代号为：TN20×50。

2)欲订购缸径为32mm，行程为60mm的双轴复动型气缸，其正确的订购码代号为：TN32×60。

1)If user need bore 20mm and 50mm travel,twin rod double action cylinder,the correct order is:TN20X50.

2)If user need bore 32mm and 60mm travel,twin rod double action cylinder,the correct order is:TN32X60.

内部结构/Inner structure

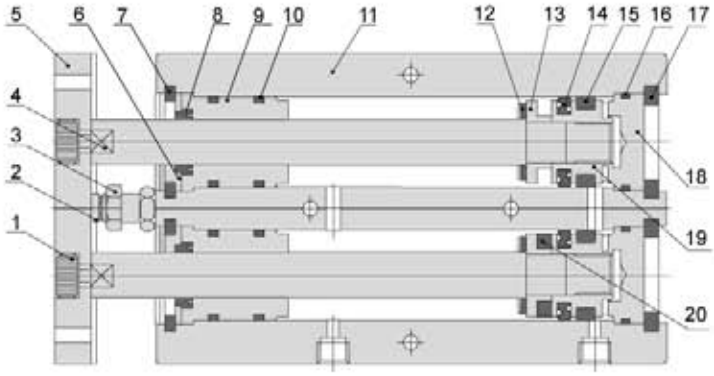

序号 Code	名称/Name	序号 Code	名称/Name
1	内六角螺丝/Hollow-head screw	2	防撞片/Anti-collision mat
3	螺丝/Screw	4	活塞杆/Piston rod
5	气缸固定板/Cylinder fixed plate	6	前盖垫片/Front cover mat
7	C形孔用扣环/C type clip	8	前盖密封圈/Front cover seals
9	前盖/Front cover	10	前盖O令/Front cover O-ring
11	本体/Body	12	防撞垫/Anti-collision mat
13	磁铁座/Magnet set	14	异形O令/Abnormity O-ring
15	耐磨垫/Wearing	16	后盖O令/Back cover O-ring
17	C形孔用扣环/C type clip	18	后盖/Back cover
19	活塞/Piston	20	磁铁/Magnet

主要零件材质/Main parts material

内径/Bore	10	16	20	25	32
本体/Body	铝合金/Aluminium alloy				
活塞/Piston	铝合金/Aluminium alloy				
活塞杆/Piston rod	高碳钢（镀硬铬研磨处理）/High carbon steel (hard chrome plated)				
前盖密封圈/Front cover seals	NBR				
活塞O令/Piston O-ring	NBR				
前後盖O令/Front cover O-ring	NBR				
防撞垫/Bumper	NBR				
前盖垫片/Front cover mat	青铜/Bronze				
气缸固定板/Cylinder fixed plate	快削铁/Free cutting steel				
缓冲螺丝/Cushioning screw	铜/Brass				
C形孔用扣环/C type clip	弹簧钢/Spring steel				
前盖/Front cover	铝合金/Aluminium alloy				
後盖/Back cover	铝合金/Aluminium alloy				
磁铁/Magnet	塑 胶/Plastic				

O令一览表/O-ring detail

	前盖密封圈/Front cover seals	活塞O令/Piston O-ring	前盖O令/Front cover O-ring	后盖O令/Back cover O-ring
内径/数量(Bore/Quantity)	2	2	2	1
10	EM0609	APA-10	1.5X7	1.5X9
16	EM0811	PZ1605	PS12.5	PS14
20	EM1014	PZ2013	2.0X15	2.0X16
25	EM1214	PZ2518	2.0X20	2.0X21
32	EM1620	PZ3210	PS28	PS30

安装尺寸/Install dimension

TN 型/Series

Φ10

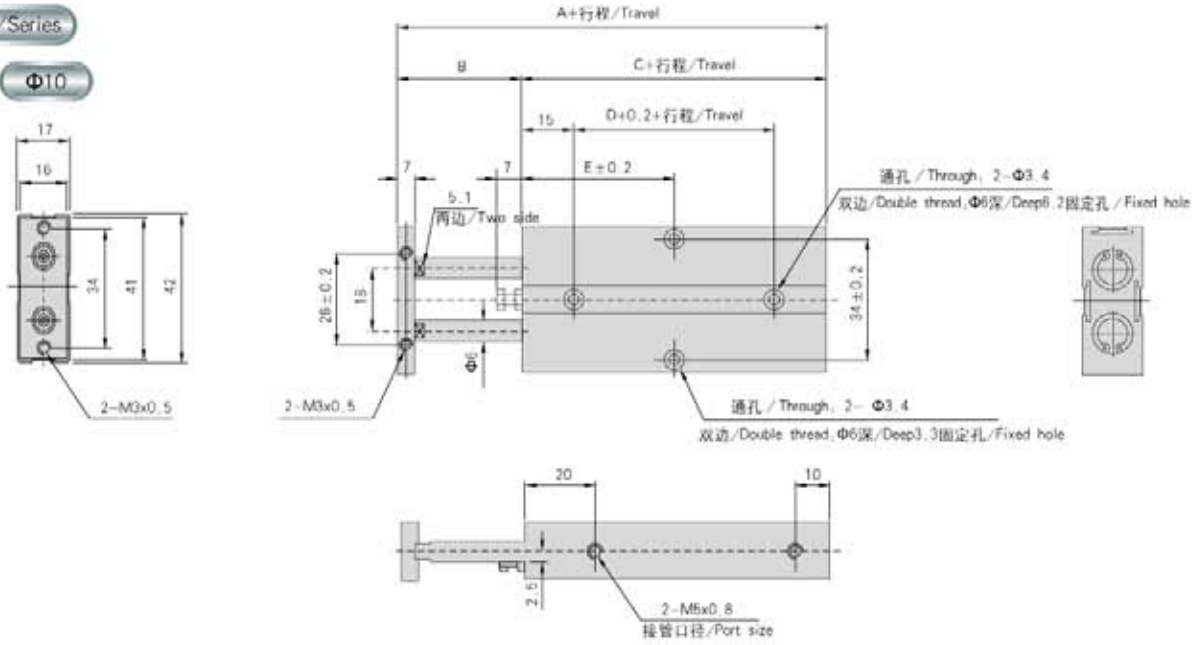

符号/Symbol 内径/符号(Bore/Symbol)	A	B	C	D	E						
					10	20	30	40	50	60	70
10	65	14	49	10	30	30	35	40	45	50	55

Φ32

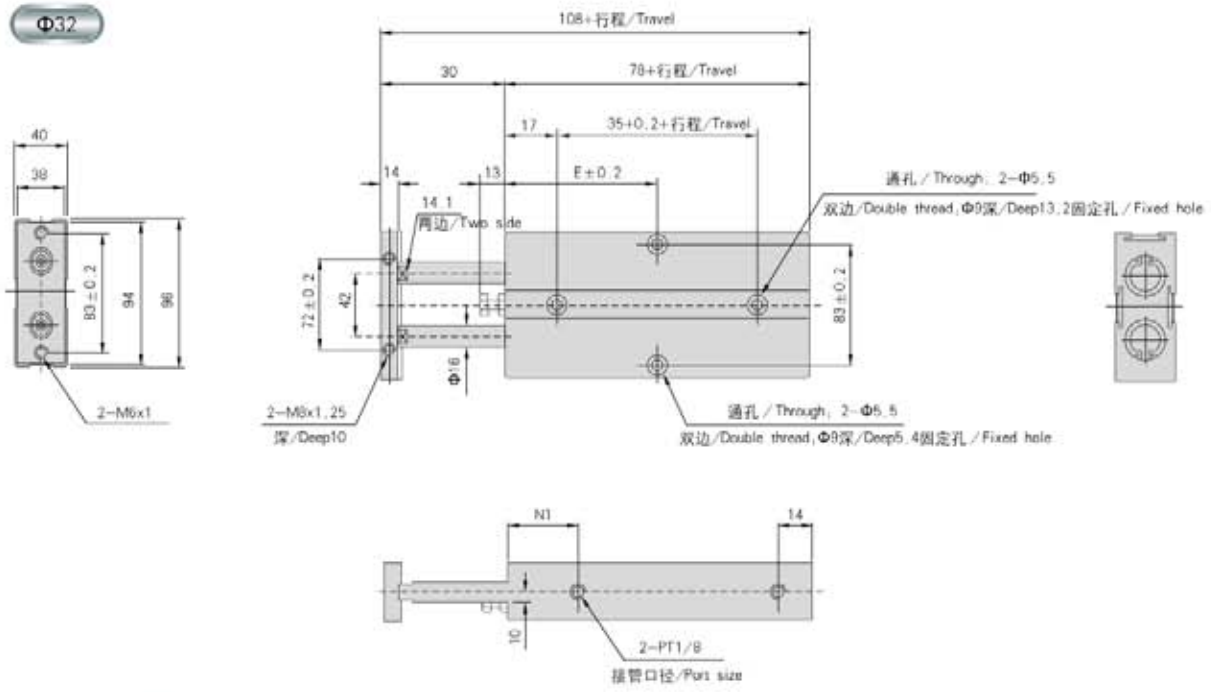

符号/Symbol 符号/行程(Symbo/Travel)	E											
	10	20	30	40	50	60	70	80	90	100	125	150
B	45	50	55	60	65	70	75	80	85	90	102.5	115
N1	35	40										

双轴气缸TN系列
DOUBLE ROD CYLINDER TN SERIES

BANGYE®

Φ16~Φ25

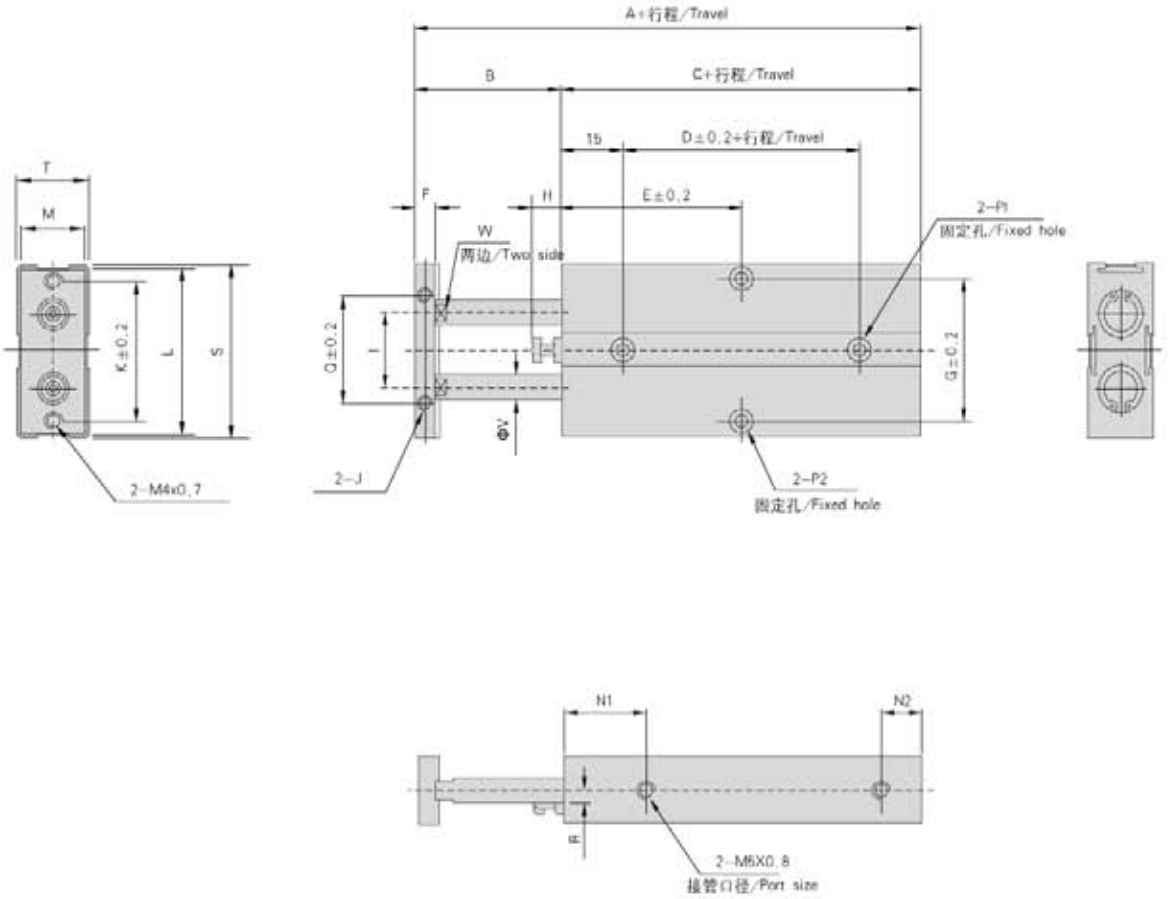

符号/Symbol 内径/符号(Bore/Symbol)	A	B	C	D	E												F	G	H	I
					10	20	30	40	50	60	70	80	90	100	125	150				
16	68	15	53	20	30	35	40	45	50	55	60	65	70	75	87.5	100	8	47	7	24
20	78	20	58	20	35	35	40	45	50	55	60	65	70	75	87.5	100	10	55	10	28
25	82	20	62	30	40	40	45	50	55	60	65	70	75	80	92.5	100	11	66	9	34

内径/符号 Bore/Symbol	J	K	L	M	N1	N2	P1	P2	Q	R	S	T	V	W
16	M4x0.7深/Deep5	47	53	20	22	11	双边/Double thread.Φ7.5深/Deep7.2mm 通孔/Through.Φ4.5	双边/Double thread.Φ6深/Deep4.5mm 通孔/Through.Φ4.5	34	3	54	21	8	6.1
20	M4x0.7深/Deep5	55	61	24	25	12	双边/Double thread.Φ7.5深/Deep7.2mm 通孔/Through.Φ4.5	双边/Double thread.Φ6深/Deep4.5mm 通孔/Through.Φ4.5	44	3.5	62	25	10	8.1
25	M4x0.7深/Deep6	66	72	29	27	12	双边/Double thread.Φ7.5深/Deep7.2mm 通孔/Through.Φ4.5	双边/Double thread.Φ6深/Deep4.5mm 通孔/Through.Φ4.5	56	6	73	30	12	10.1

前板尺寸/Front plate dimension

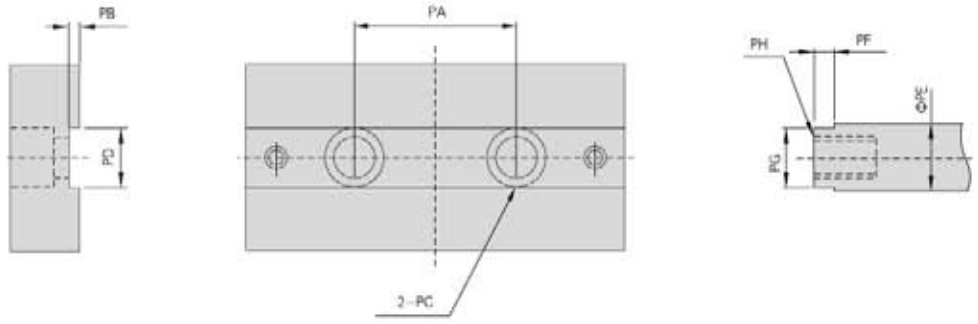

内径/符号(Bore/Symbol)	PA	PB	PC	PD	PE	PF	PG	PH
10	18	0.7	Φ6.2深/Deep3.5mm 通孔 / Through,Φ3.3	5.2	6	2.2	5.1	M3x0.5 深/Deep5.5mm
16	24	1	Φ7.8深/Deep4.6mm 通孔 / Through,Φ4.3	6.2	8	3	6.1	M4x0.7 深/Deep9mm
20	28	1	Φ11深/Deep6.8mm 通孔 / Through,Φ6.5	8.2	10	3	8.1	M6x1 深/Deep10mm
25	34	1	Φ11深/Deep6.8mm 通孔 / Through,Φ6.5	10.2	12	3	10.1	M6x1 深/Deep10mm
32	42	2	Φ17深/Deep12mm 通孔 / Through,Φ10.5	14.2	16	3	14.1	M10x1.5 深/Deep13mm

容许侧向负载/Available side load

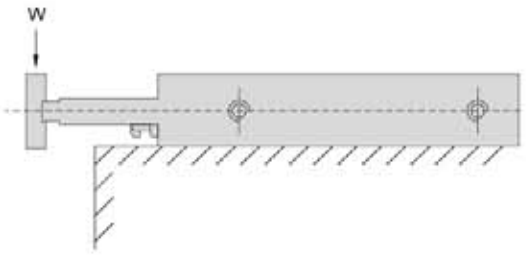

※ 1Kgf=9.81N

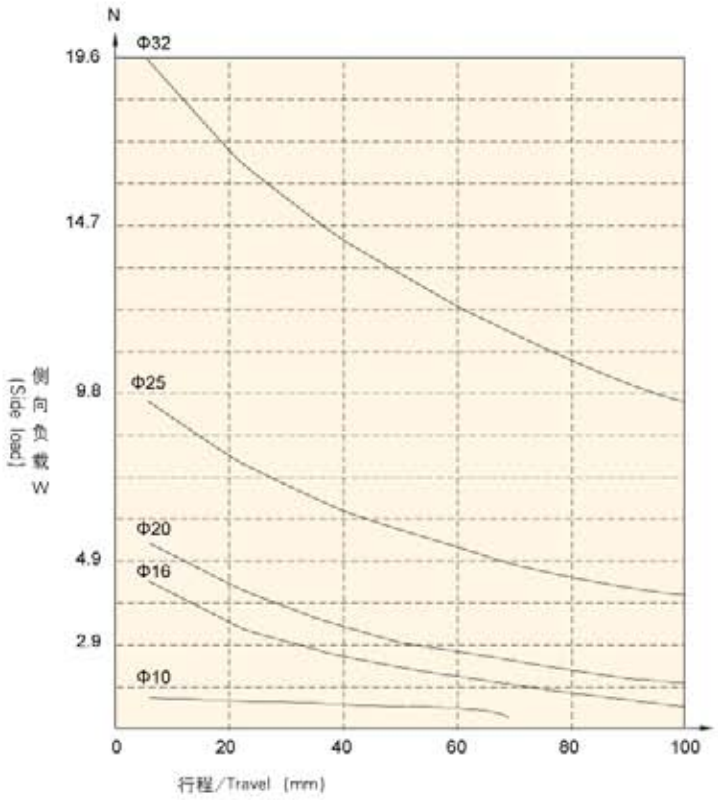

感应开关/Sensor switch



相关尺寸/Specification

CS1-J

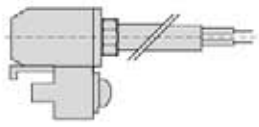

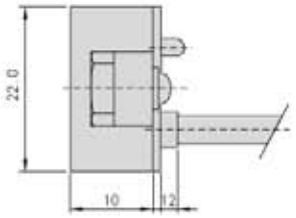

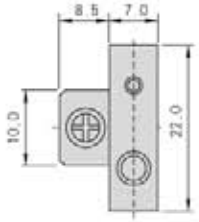

接线图/Wiring diagram

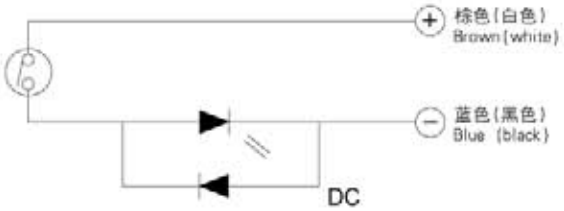

规 格/Specification

感应开关型式 Model	使用电压范围 Available voltage	使用电流范围 Available current	开关特性/switch characteristic				使用温度范围 Available temperature	耐震程度/Seismic degree		指示灯 Light	电线 Wire	寿命 Life time
			反应时间 Reflect time	归位时间 Return time	释放时间 Breaking time	频率范围 Frequency range		非反复震动 Not vibration again and again	反复震动 Vibration again and again			
CS1-J	AC:5V~240V DC:5V~240V	AC:5~40mA DC:5~40mA	最大0.3ms MAX 0.3ms	最大0.3ms MAX 0.3ms	最大0.05ms MAX 0.05ms	3~250Hz	0~60℃	30G	最高(Highest) /7G(10~55HZ) 共振/Syntony 5300±300HZ	LED	2M	至少 500万次 At least 5 million times

订购码/Ordering code

CS1 —— J

型 号/Model：CS1气缸用磁性开关 CS1 Sensor switch

型 式/Type：J.一般型/Normally type

安 装/Install

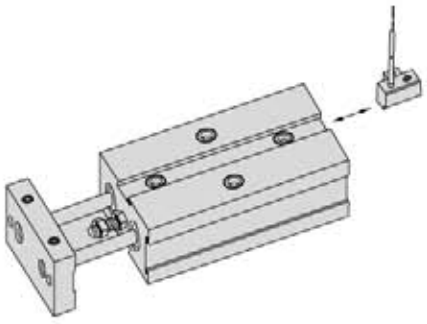

举例/Sample

1) 欲订购与双轴气缸配套的铁片固定型磁感应开关。其正确的订购码代号为：CS1-J。
If user need iron sheet fixed type magnet sensor switch which used for TN series double rod cylinder, the correct ordering code is: CS1-J.

安装与使用/Install&use

- 工作中负载有变化，应选用输出力充裕的气缸，在高温条件下，应选用相应的耐高温气缸。

  The load would be changed during working process,so the cylinder with enough output force should be chosen, on the case of high temperature,operator is suggested to choose the cylinder with high-temp seals!

- 气缸配管前，必须清除管道内的杂物，防止杂物进入气缸内。

  Before put in the air tube on the cylinder, the inside surface of the pipe must be cleaned.In order to prevent sundries from entering into cylinder.

- 气缸使用介质应经过40μm以上滤芯过滤后方可使用。

  The medium used by cylinder can not be put into use until it has pass filtering by certain filtering element above 40um.

- 在低温环境下，应采取抗冻措施，防止系统的水分结冰。

  Under condition of low temperature,the anti-freezing measure must be adopted,so as to avoid freezing of engineering system.

- 气缸在工作过程中应尽可能避免受侧向负载，以维持气缸的正常工作和使用寿命。

  During the working process ,the cylinder should be avoid side-load,in order to maintain normal working and assure the lifetime of the cylinder.

- 气缸拆下长时间不使用，要注意表面防锈，进排气口应加防尘堵塞帽。

  If the cylinder has been out of work for a long time,operator should take notice of surface rustproof,the dust proof cap is suggested to be added at air in and out hole .

产品特性/Product features

STM系列/Series　　感应开关/Sensor switch

固定方式/Fixed type

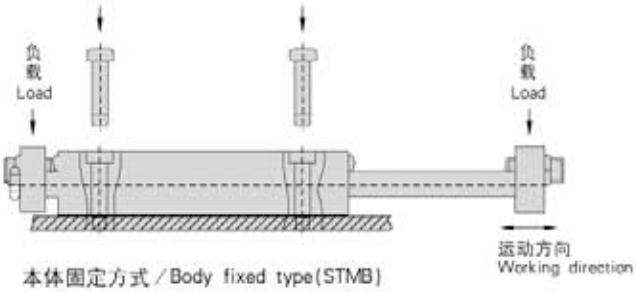

本体固定方式/Body fixed type(STMB)

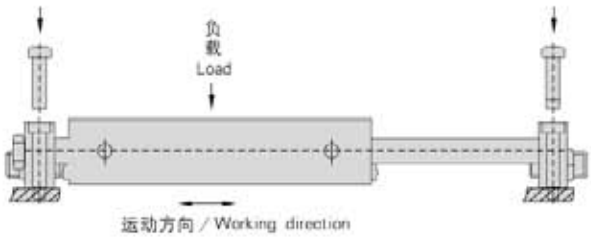

滑块固定方式/Slide plate fixed type(STMS)

滑台气缸STM系列
SLIDE CYLINDER STM SERIES

BANGYE

产品特性/Product features

导 向 性/Guidance function

双活塞杆提供了高度的抗弯曲和扭转刚性，保证了气缸的使用寿命和卓越的导向性能。

Double piston rod have a good performance of bend and rotating resistance so as to assure the cylinder have longer life time and good guidance function.



易 安 装/Easy mounting

在本体外围预留装配槽，使磁性开关在安装固定及位置调整时，均极其简单。

Sensor slots on the cylinder ,easy to install the sensor and adjust the sensor position.

附磁性/Magnetic property

汽缸活塞上装有一个永久磁铁，它可触发安装在气缸上的磁性开关来感测气缸的运动位置。

The cylinder piston is equipped with a permanent magnet that can trigger the magnetic switch of the cylinder to detect the moving position of cylinder.

符号/Symbol

STMB



STMS



规　格/Specification

内径/Bore (mm)	10	16	20	25
动作型式/Action type	双活塞复动式/Two piston double action			
工作介质/Work medium	空　气/Air			
使用温度范围/Available temperature ℃	−5～70			
使用压力范围/Operation pressure range(Kgf/cm²)	1.0～9.0			
保证耐压力/Proof pressure(Kgf/cm²)	13.5			
使用速度范围/Operation speed (mm/s)	50～200			
缓冲型式/Cushioning	无/Without	油压缓冲器(选择项)/Oil cushion device(available)		
给油/Lubricate	不需要/No need			
不回转精度/No rotation tolerance/	±0.1°	±0.05°		
接管口径/Port size	M5x0.8			PT1/8

缓冲器配置/Cushion device detail

行程/缸径(Travel/bore)	10		16		20		25	
25	−	−	−	●	−	●	−	●
50	−	−	−	●	−	●	−	●
75	−	−	○	●	○	●	○	●
100	−	−	○	●	○	●	○	●
125	X	X	○	●	○	●	○	●
150	X	X	○	●	○	●	○	●
175	X	X	○	●	○	●	○	●
200	X	X	○	●	○	●	○	●
250	X	X	X	X	○	●	○	●
缓冲器型号/cushion device model	AC0806		AC0806		AC1008		AC1210	

※ −：代表不配缓衝器
Without cushion device

X：代表无此规格
Without this model

○：代表缓衝器装配在本体上
Cushion device fixed on the cylinder body

●：代表缓衝器装配在前板上
Cushion device fixed on the front plate

行 程/Travel

缸径/行程(Bore/Travel)	标准型 / Standard								
10	25	50	75	100					
16	25	50	75	100	125	150	175	200	
20	25	50	75	100	125	150	175	200	
25	25	50	75	100	125	150	175	200	250

气缸理论出力表/Table for theoretic power of a cylinder

气缸内径 Cylinder ID	活塞杆外径 Out diameter of piston rod	受压面积 Pressure area (cm^2)	进气压力/Air-in pressure (Kgf/cm^2)								
			1	2	3	4	5	6	7	8	9
10	6	0.50	1.00	2.00	3.00	4.00	5.00	6.00	7.00	8.00	9.00
16	8	1.51	3.02	6.04	9.06	12.08	15.10	18.12	21.14	24.16	27.18
20	10	2.36	4.72	9.44	14.16	18.88	23.60	28.32	33.04	37.76	42.48
25	12	3.78	7.56	15.12	22.68	30.24	37.80	45.36	52.92	60.48	68.04

订购码/Ordering code

STM B — 25 X 100

- STM — 系列代号/Series code
  - STM：STM系列滑台汽缸 STM Series slide cylinder
- B — 固定方式/Fixed type
  - B：本体固定型/Body fixed type
  - S：滑块固定型/Slide plate fixed type
- 25 — 内径/Cylinder bore
  - 10：10mm
  - 16：16mm
  - 20：20mm
  - 25：25mm
- 100 — 行程/Cylinder travel

举例/Sample

1) 欲订购气缸内径为16mm，行程为100mm，本体固定型的STM系列滑台气缸。其正确的订购码代号为：STMB-16x100。
If user need bore 16mm and 100mm travel,body fixed STM series slide cylinder the correct order is:STMB-16X100.

2) 欲订购气缸内径为25mm，行程为150mm，滑块固定型的STM系列滑台气缸。其正确的订购码代号为：STMS-25x150。
If user need bore 25mm and 150mm travel,slide plate fixed STM series slide cylinder the correct order is:STMS-25X150.

内部结构/Inner structure

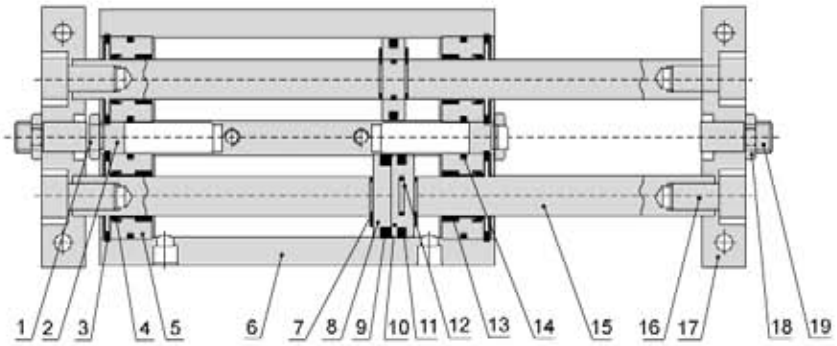

序号 Code	名称/Name	序号 Code	名称/Name	序号 Code	名称/Name	序号 Code	名称/Name
1	防撞垫片/Anti-collision mat	2	螺丝/Screw	3	C 型扣环/C type clip	4	防尘圈/Anti-dust wiper
5	前盖/Front cover	6	本体/Body	7	E 型扣环/E type clip	8	磁铁座/Magnet set
9	磁铁/Magnet	10	活塞/Piston	11	异型O令/Abnormality O-ring	12	O令/O-ring
13	滑动衬套/Slide bush	14	O令/O-ring	15	活塞杆/Piston rod	16	内六角螺丝/Hexagon screws
17	滑台固定板/Slide plate	18	六角螺帽/Hexagon screw nut	19	内六角止付螺丝/Hollow-head setscrew		

主要零件材质/Main parts material

零件名称/Name	材质/Material	零件名称/Name	材质/Material	零件名称/Name	材质/Material
本体/Body	铝合金/Aluminium alloy	磁铁/Magnet	稀土类/Rare-earth	异型O令/Abnormality O-ring	NBR
前盖/Front cover	铝合金/Aluminium alloy	滑动衬套/Slide bush	粉末冶钢/Powder bronze	O令/O-ring	NBR
活塞杆/Piston rod	中碳钢(镀硬铬)/Mid-carbon steel(hard chrome plate)	内六角螺丝/Hollow-head screw	中碳钢/Medium carbon steel	六角螺帽/Hexagon screw nut	中碳钢/Medium carbon steel
活塞/Piston	铝合金/Aluminium alloy	螺丝/Screw	中碳钢/Medium carbon steel	C 型扣环/C type clip	弹簧钢/Spring steel
磁铁座/Magnet set	铝合金/Aluminium alloy	防撞垫片/Anti-collision mat	XNBR	气缸固定板/Cylinder fixed mat	中碳钢/Medium carbon steel
防尘圈/Anti-dust wiper	PU				

O令一览表/O-ring detail

	前盖密封圈 Front cover seals	活塞O令 Piston O-ring	活塞杆O令 Piston rod O-ring	前后盖O令 Front and back cover O-rin	塞头O令 lug O-ring
内径/数量(Bore/Quantity)	4	2	2	4	2
10	Φ6xΦ9	Φ1.5xΦ6.5	Φ1xΦ4	Φ1.5xΦ9	–
16	Φ8xΦ11	PZ1605	Φ1xΦ6	Φ2xΦ13	Φ7.5xΦ9.5x1.4
20	Φ10xΦ14	PZ2013	Φ1xΦ8	Φ2xΦ17	Φ9.5xΦ11.5x1.4
25	Φ12xΦ14	PZ2518	Φ1xΦ10	Φ2xΦ22	Φ11.5xΦ13.5x1.4

外部规格/Outside dimension

STMB-10

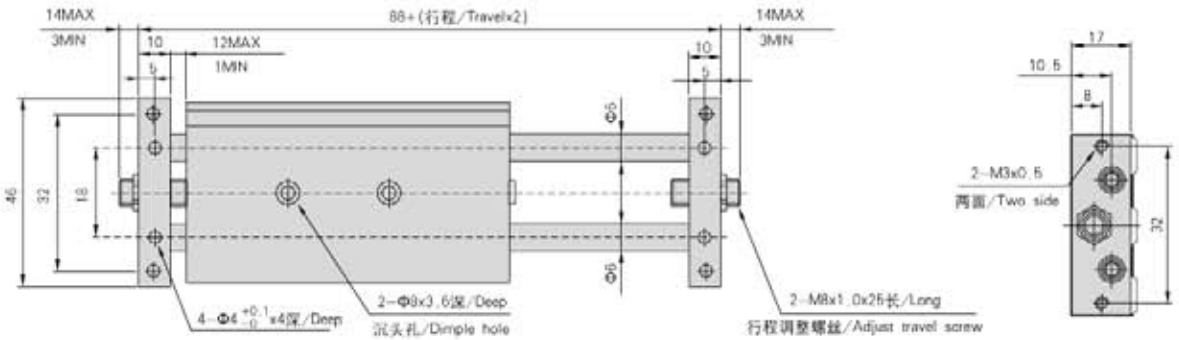

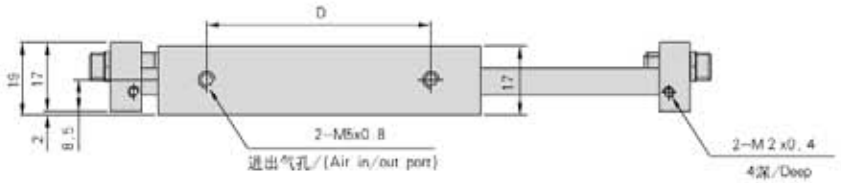

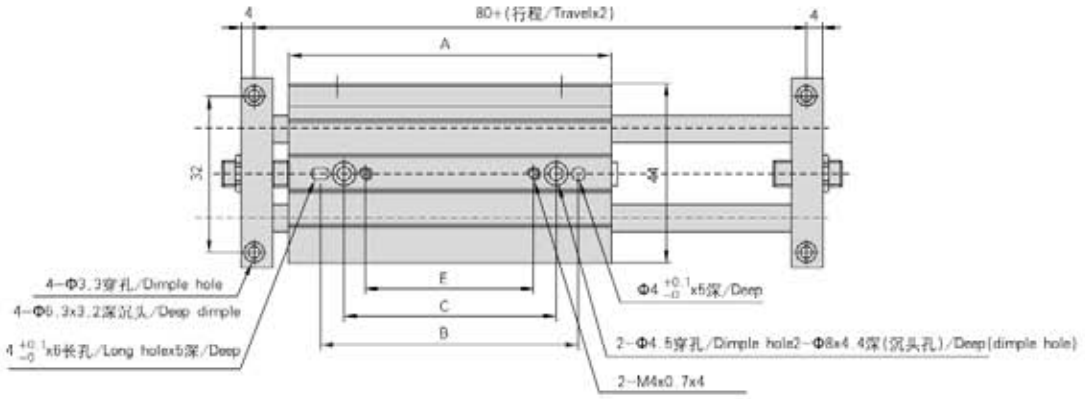

符号/行程(Symbol/Travel)	25	50	75	100
A	81	106	131	156
B	65	85	85	85
C	35	60	60	60
D	46	71	96	121
E	15	40	40	40

外部规格/Outside dimension

STMB-16

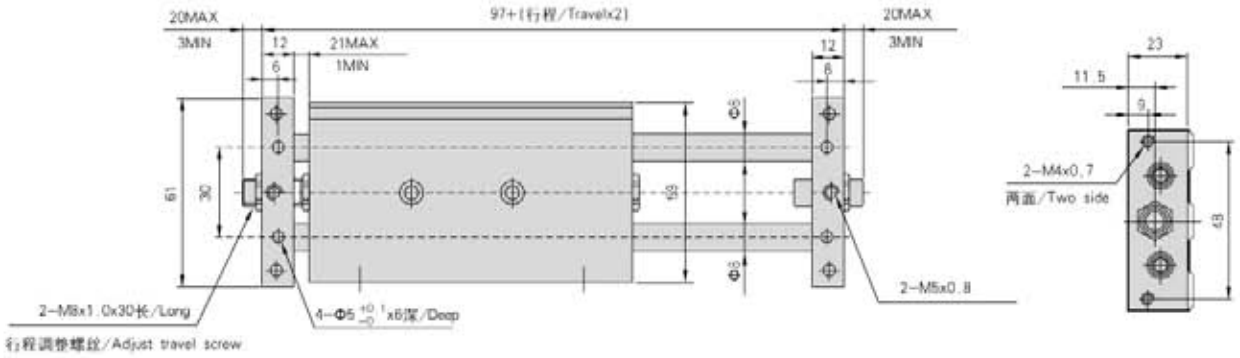

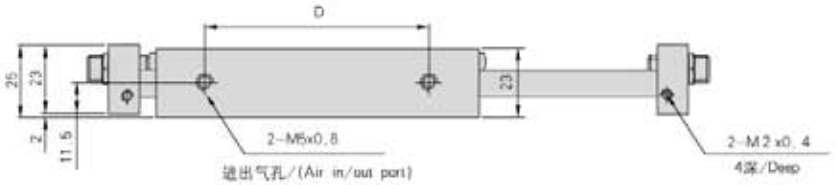

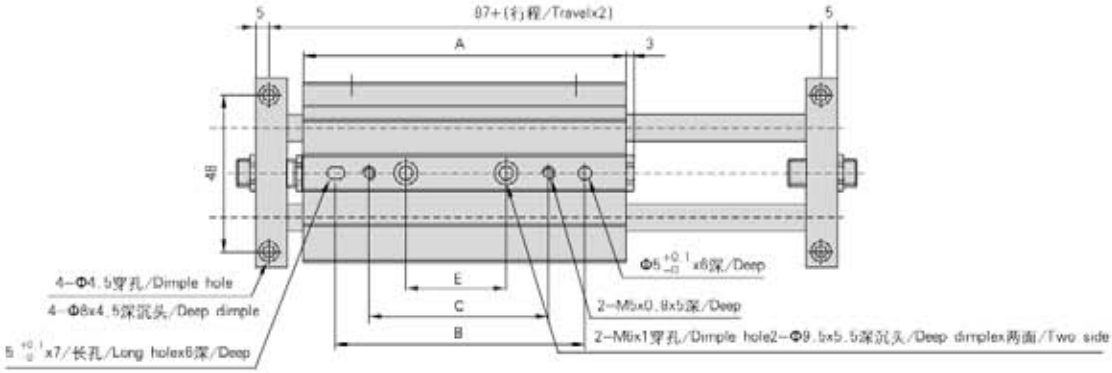

行程/符号(Travel/Symbol)	A	B	C	D	E
25	86	55	–	48	25
50	111	80	–	73	50
75	136	105	75	98	45
100	161	130	100	123	70
125	186	150	120	148	90
150	211	150	120	173	90
175	236	150	120	198	90
200	261	150	120	223	90

STMB-20

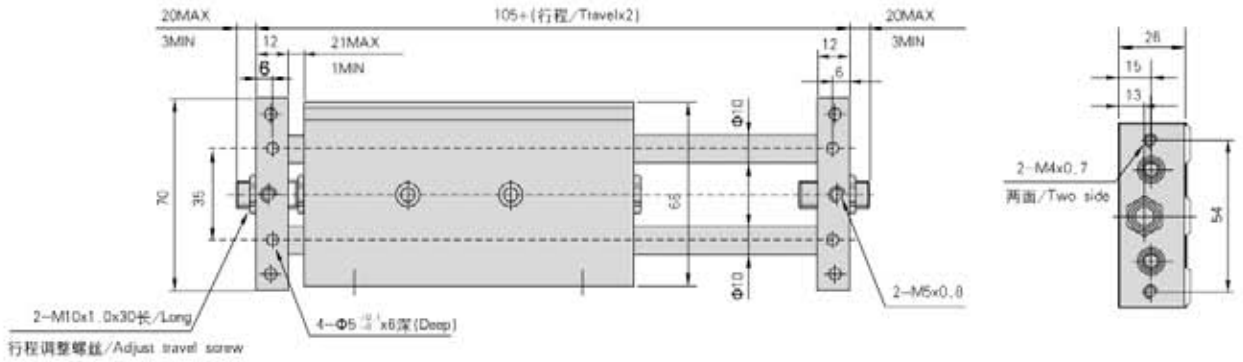

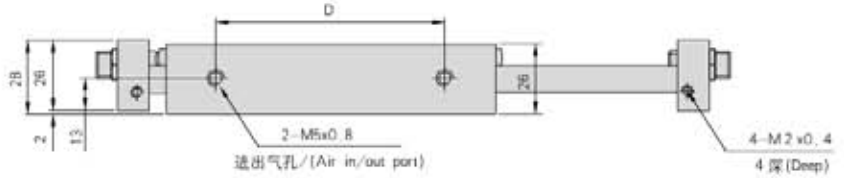

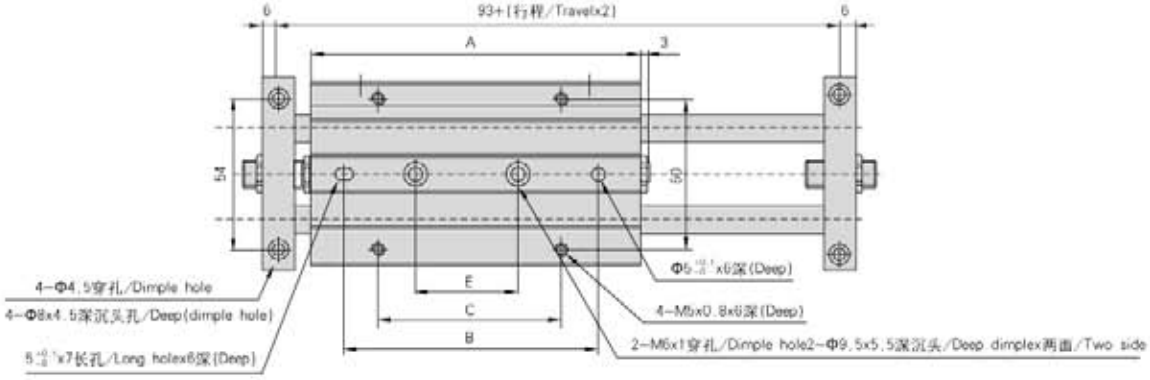

行程/符号(Travel/Symbol)	A	B	C	D	E
25	94	60	50	53	35
50	119	85	50	78	45
75	144	110	75	103	45
100	169	135	100	128	70
125	194	150	120	153	90
150	219	150	120	178	90
175	244	150	120	203	90
200	269	150	120	228	90
250	319	150	120	278	90

STMB-25

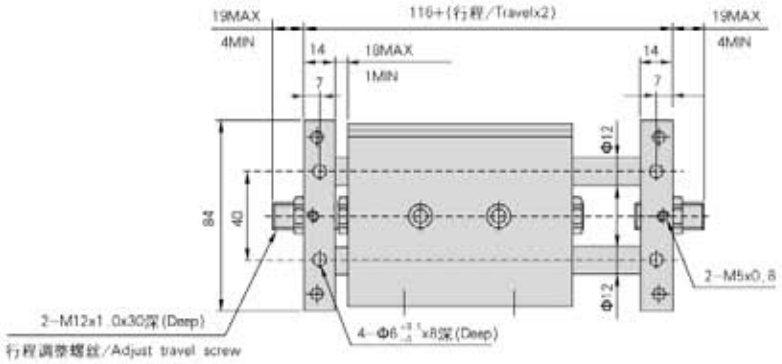

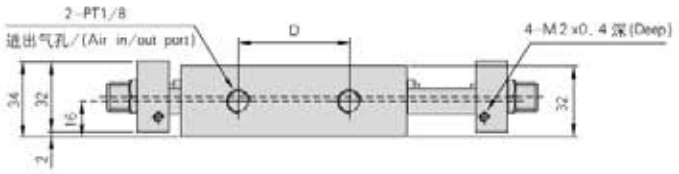

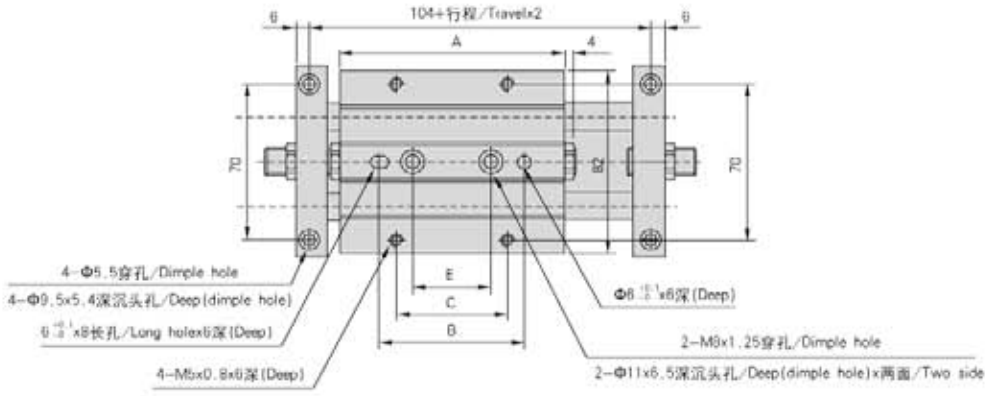

行程/符号Travel/Symbol)	A	B	C	D	E
25	101	65	50	50	35
50	126	90	50	75	45
75	151	115	75	100	70
100	176	140	100	125	95
125	201	140	100	150	100
150	226	140	100	175	100
175	251	140	100	200	100
200	276	140	100	225	100
250	326	140	100	275	100

STMS-10

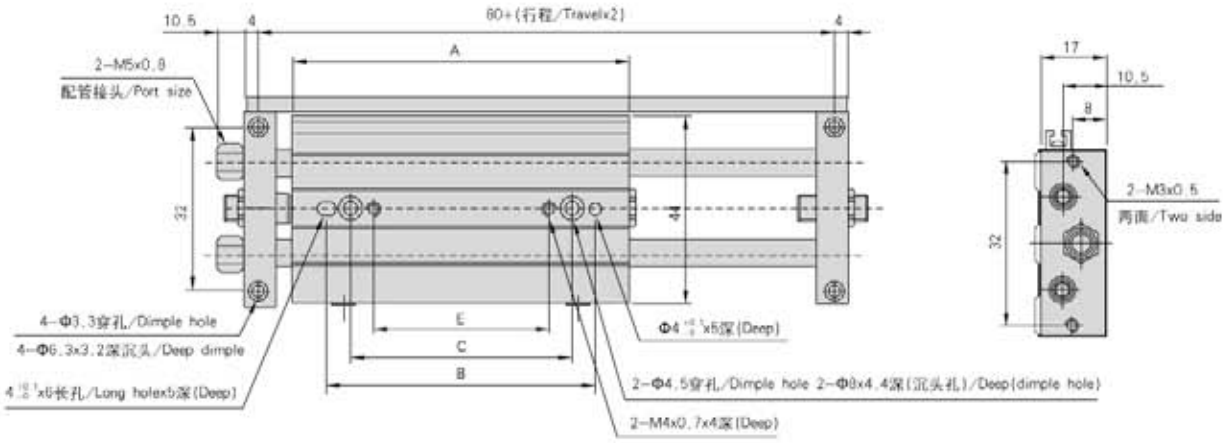



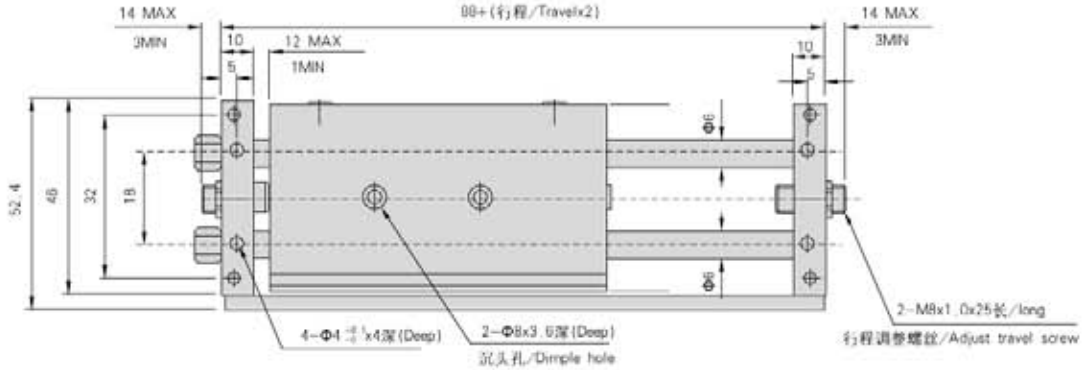

符号/行程(Symbol/Travel)	25	50	75	100
A	81	106	131	156
B	65	85	85	85
C	35	60	60	60
E	15	40	40	40

STMS-16

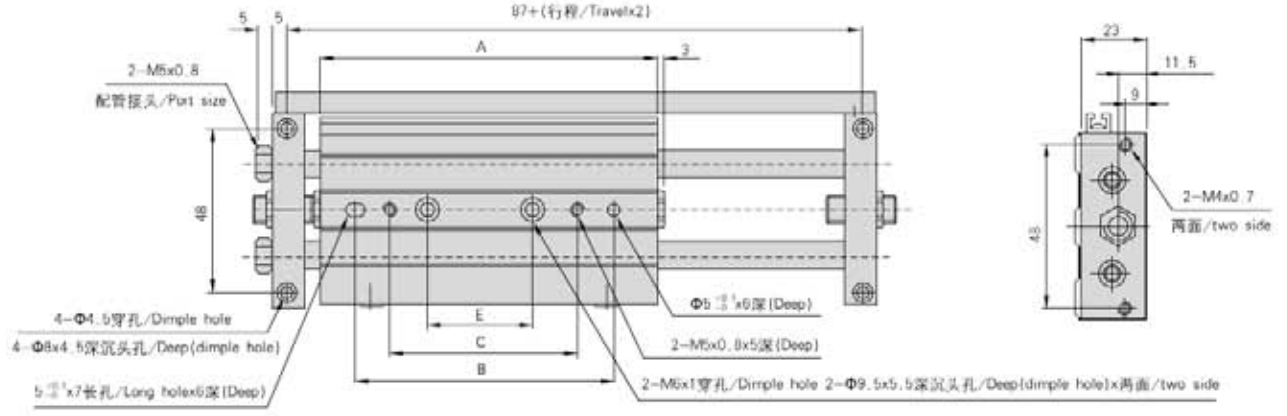



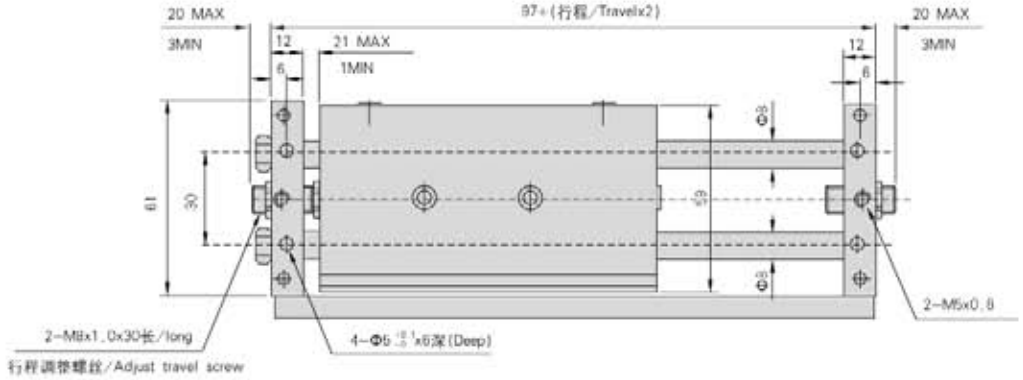

行程/符号(Travel/Symbol)	A	B	C	E
25	86	55	–	25
50	111	80	–	50
75	136	105	75	45
100	161	130	100	70
125	186	150	120	90
150	211	150	120	90
175	236	150	120	90
200	261	150	120	90

STMS-20

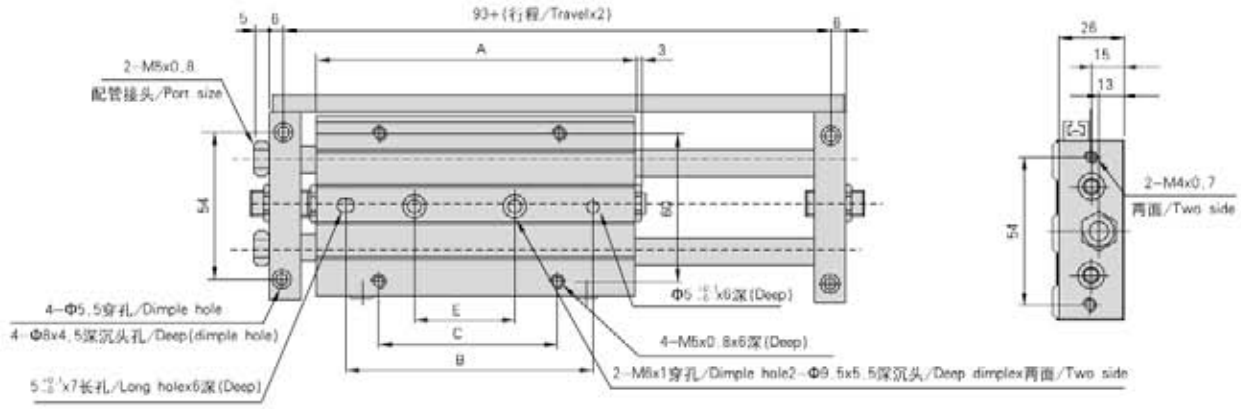



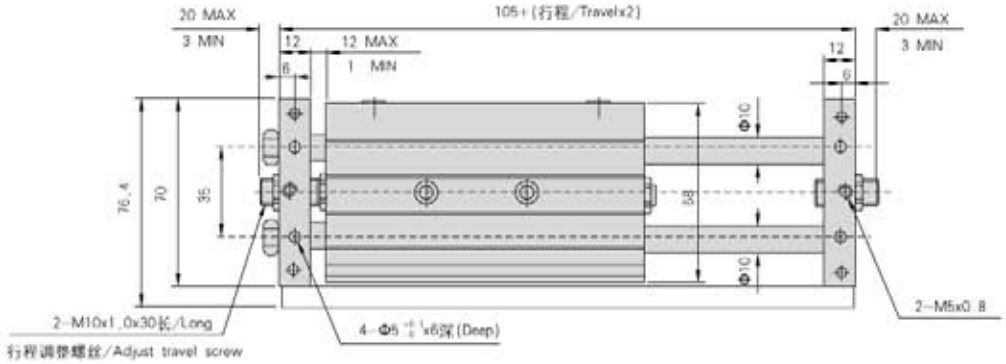

行程/符号(Travel/Symbol)	A	B	C	E
25	94	60	50	35
50	119	85	50	45
75	144	110	75	45
100	169	135	100	70
125	194	150	120	90
150	219	150	120	90
175	244	150	120	90
200	269	150	120	90
250	319	150	120	90

STMS-25

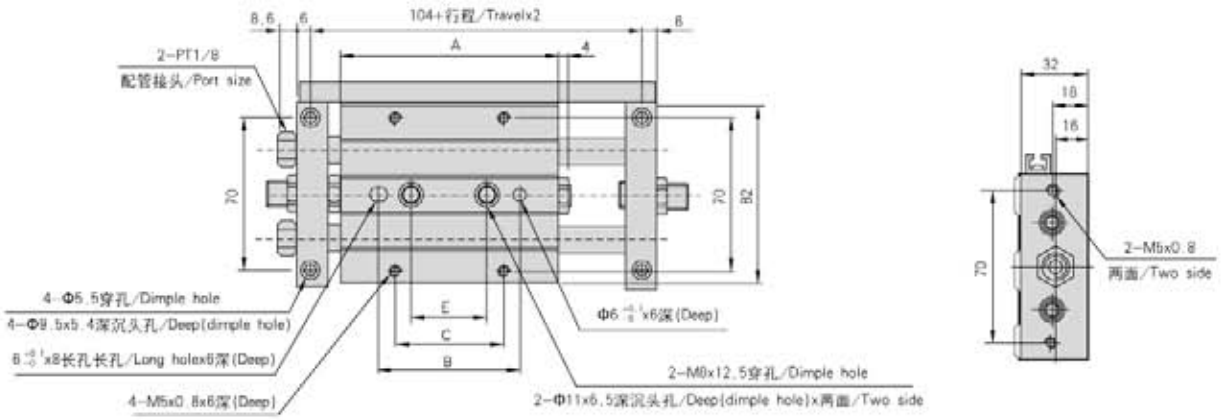

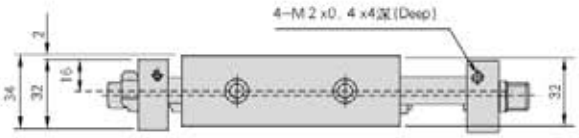

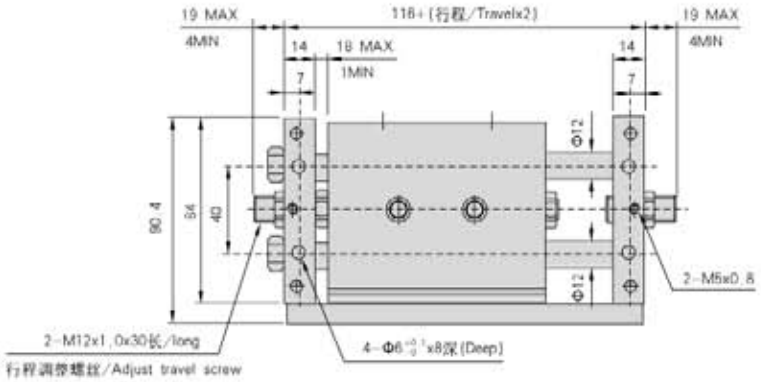

行程/符号(Travel/Symbol)	A	B	C	E
25	101	65	50	35
50	126	90	50	45
75	151	115	75	45
100	176	140	100	70
125	201	140	100	95
150	226	140	100	100
175	251	140	100	100
200	276	140	100	100
250	326	140	100	100

感应开关/Sensor switch



相关尺寸/Specification

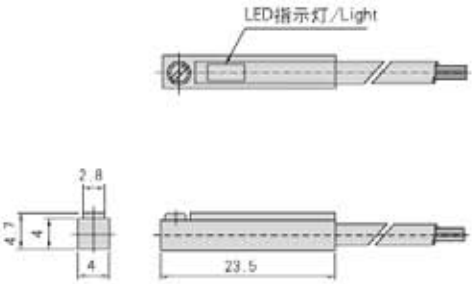

接线图/Wiring diagram

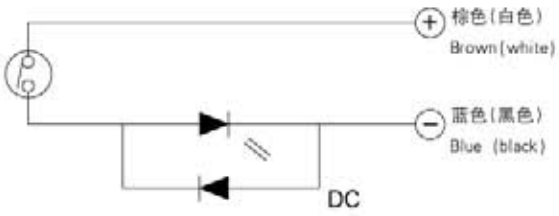

规　格/Specification

感应开关型式 Model	使用电压范围 Available voltage	使用电流范围 Available current	开关特性/Switch characteristic				使用温度范围 Available temperature	耐震程度/Seismic degree		指示灯 Light	电线 Wire	寿命 Life time
			反应时间 Reflect time	归位时间 Return time	释放时间 Breaking time	频率范围 Frequency range		非反复震动 Not vibration again and again	反复震动 Vibration again and again			
CS1-G	AC：5V～240V DC：5V～240V	AC：5～40mA DC：5～50mA	最大0.3ms MAX 0.3ms	最大0.3ms MAX 0.3ms	最大0.05ms MAX 0.05ms	3～250Hz	0～60℃	30G	最高(highest) /7G(10～55HZ) 共振/Syntony 5300±300HZ	LED	2M	至少 500万次 At least 5 million times

订购码/Ordering code

CS1 —— G

CS1 型 号/Model
CS1气缸用磁性开关
CS1 Sensor switch

G 型 式/Type
G:埋入式/All in type

举例/Sample

欲订购与双轴滑台气缸配套的磁感应开关。其正确的订购码代号为：CS1-G。

If user need the sensor switch which will be used for twin rod slide cylinder, the correct order is CS1-G.

安　装/Install

STMB的安装/Install

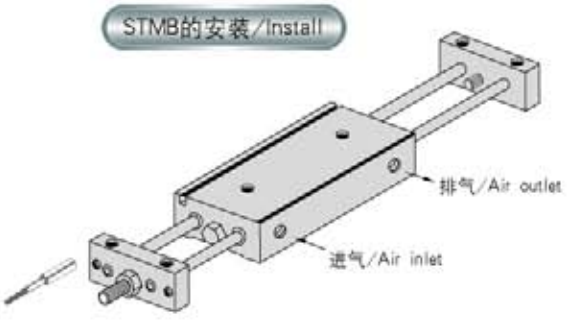

STMS的安装/Install

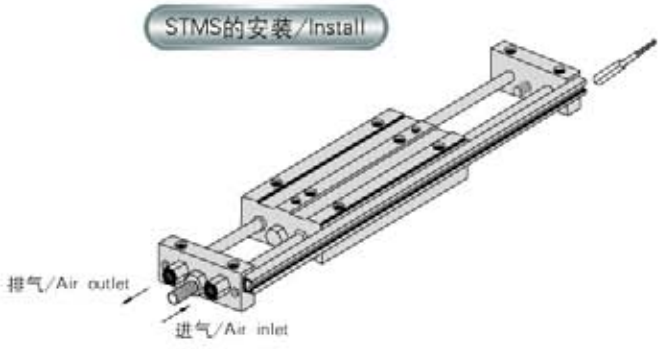

技术资料/Technical data

安装与使用/Install&use

- 工作中负载有变化，应选用输出力充裕的气缸，在高温条件下，应选用相应的耐高温气缸。
  The load would be changed during working process,so the cylinder with enough output force should be chosen ,on the case of high temperature , operator is suggested to choose the cylinder with high-temp seals!
- 气缸配管前，必须清除管道内的杂物，防止杂物进入气缸内。
  Before put in the air tube on the cylinder ,the inside surface of the pipe must be cleaned .In order to prevent sundries from entering into cylinder.
- 气缸使用介质应经过40μm以上滤芯过滤后方可使用。
  The medium used by cylinder can not be put into use until it has pass filtering by certain filtering element above 40um.
- 在低温环境下，应采取抗冻措施，防止系统的水分结冰。
  Under condition of low temperature ,the anti-freezing measure must be adopted ,so as to avoid freezing of engineering system.
- 气缸使用前经空载试运转，运转前将缓冲调至最小，逐步放松，以免产生过大冲击而损害气缸。
  The idling test should be done before operating of cylinder, before test the cushion screw must be adjusted to the minimum, then increased gradually ,so as to avoid super-large shock and break the cylinder!
- 气缸在工作过程中应尽可能避免受侧向负载，以维持气缸的正常工作和使用寿命。
  During the working process ,the cylinder should be avoid side-load,in order to maintain normal working and assure the lifetime of the cylinder.
- 气缸拆下长时间不使用，要注意表面防锈，进排气口应加防尘堵塞帽。
  If the cylinder has been out of work for a long time ,operator should take notice of surface rustproof,the dust proof cap is suggested to be added at air in and out hole .

气缸理论出力计算方法/Formula for cylinder output power

$$F = P \times A$$

活塞受压面积/Piston pressed area (cm^2)

工作压力/Working pressure (Kgf/cm^2)

气缸理论出力/The output power of cylinder (Kgf)

气缸理论出力表/Table for theoretic power of a cylinder

气缸内径 Cylinder ID	活塞杆外径 Out diameter of piston rod	动作方式 Action type		受压面积 Pressure area(mm^2)	空气压力/Air pressure (Kgf/cm^2)								
					1	2	3	4	5	6	7	8	9
40	20	复动型 Double action	压侧/Push side	12.56	12.56	25.12	37.68	50.24	62.80	75.36	87.92	100.24	113.04
			拉侧/Pull side	9.42	9.42	18.84	28.26	37.68	47.10	56.52	65.94	75.36	84.78
50	20	复动型 Double action	压侧/Push side	19.63	19.63	39.26	58.89	78.52	98.15	117.78	137.41	157.04	176.67
			拉侧/Pull side	16.49	16.49	32.98	49.47	65.96	82.45	98.94	115.43	139.92	148.41
63	25	复动型 Double action	压侧/Push side	31.17	31.17	62.34	93.51	124.68	155.85	187.02	218.19	249.36	280.53
			拉侧/Pull side	28.03	28.03	56.06	84.09	112.12	140.15	168.18	196.21	224.24	252.27
80	25	复动型 Double action	压侧/Push side	50.26	50.26	100.52	150.78	201.04	251.30	301.56	351.82	402.08	452.34
			拉侧/Pull side	45.36	45.36	90.72	136.08	181.44	226.80	272.16	317.52	362.88	408.24

夹紧气缸CK系列
CLAMPING CYLINDER CK SERIES

BANGYE®

产品特性/Product features

免润滑/Free of lubrication

采用含油轴承，使活塞杆无需加油润滑。
Oil bearing is adopted so the piston rod do not need to be lubricated by lube.

缓冲性/Cushion

除带固定缓冲外，气缸终端还带可调缓冲，
使气缸换向时平稳无冲击。
Besides fixed buffer,the cylinder terminal has adjustable cushion screw,so that the cylinder enters into stably without impact during commute direction .

耐高温性/High temperature available

可采用耐高温密封材料，使气缸在150摄氏度
高温条件下正常工作(客户需向本公司订作)。
Adopted of special sealing material ,the cylinder can work normally at 150 degree (user should order it from us).

附磁性/Magnetic property

气缸活塞上装有一个永久磁铁，它可触发安装
在气缸上的磁性开关来感测气缸的运动信置。
The cylinder piston is equipped with a permanent magnet that can trigger the magnetic switch of the cylinder to detect the moving position of cylinder.



规　格/Specification

内径/Bore (mm)	40	50	63	80
动作型式/Action type	复动型/Double action			
工作介质/Work medium	空气/Filtered air			
使用压力范围/Operation pressure range(Kgf/cm²)	1～9			
保证耐压力/Proof pressure(Kgf/cm²)	13.5			
使用温度范围/Available temperature ℃	-5～70			
使用速度范围/Operation speed (mm/s)	50～800			
缓冲型式/Cushioning	可调缓冲/Cushion adjustable			
缓冲行程/Cushion travel	22			32
接管口径/Port size	PT1/4			PT3/8

订购码/Ordering code

CK —— 50 X 50 —— S

- CK：型　号/Symbol
- 50：缸　径/Bore
- 50：行程/Travel
- S：磁石代号/Magnet code
  - S，附磁石
  S, With magnet
  - 空白，不附磁
  Blank, Without magnet

行　程/travel

内径/bore	标准行程/Standard travel								
40	25	50	75	80	100	125	150		
50	25	50	75	80	100	125	150		
63	25	50	75	80	100	125	150		
80	25	50	75	80	100	125	150	175	200

使用例(薄板固定)/Sample(thin plate fixed)

向上固定/Up side fixed

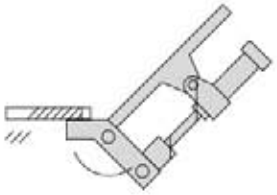

向下固定/Down side fixed

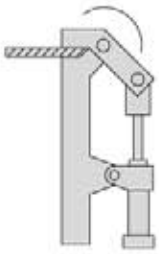

上下向固定/Up and down fixed

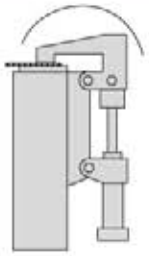

基本尺寸/Basic specification

Φ40～Φ63

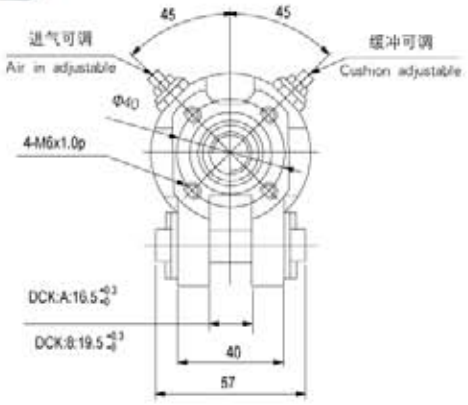

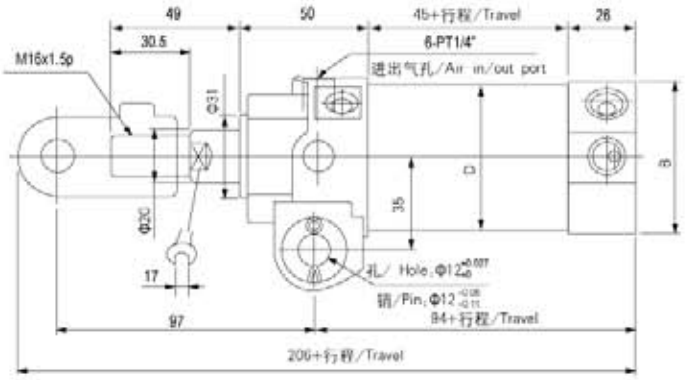

缸径/Bore	Φ40	Φ50	Φ63
B	Φ47	Φ57	Φ68
D	Φ45	Φ55	Φ68

I型接头/I Joint

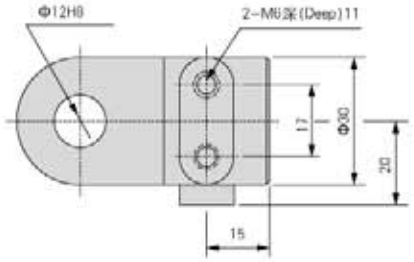

Y型接头/Y Joint

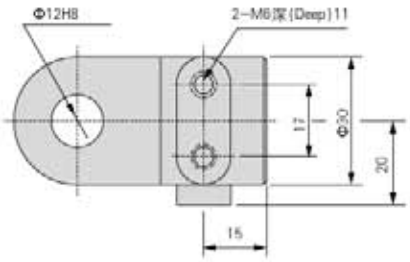

销 子/Pin

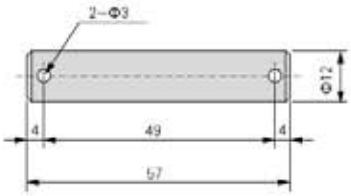

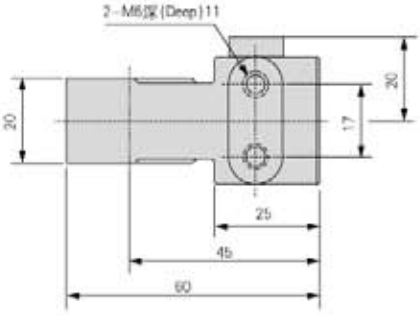

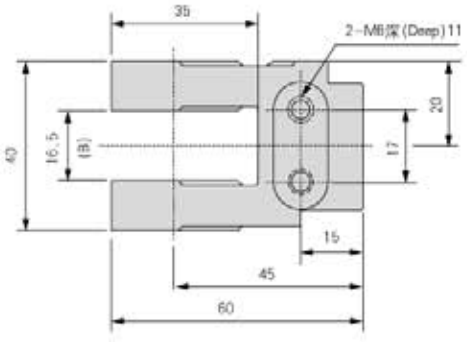

(B):为CKB宽度为19.5
Width of CKB is 19.5

CK系列/SERIES

基本尺寸/Basic specification

Φ80

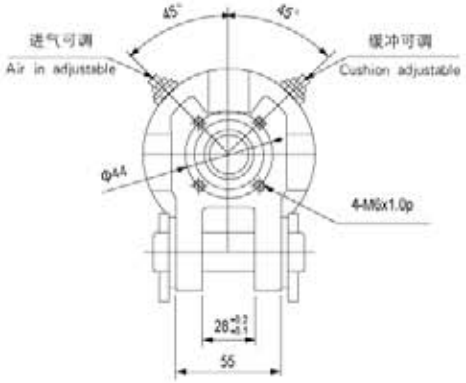

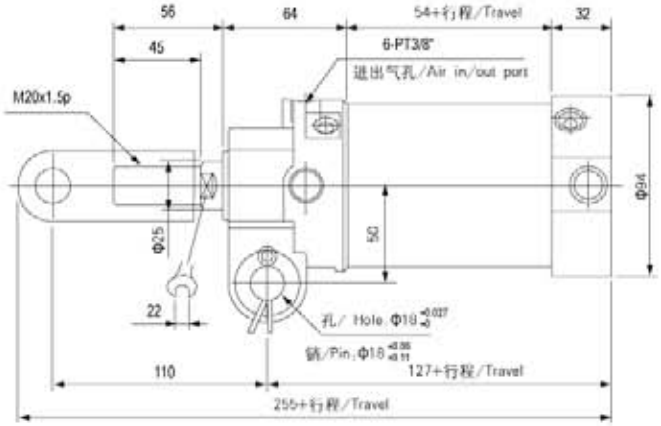

Y型接头/Y Joint

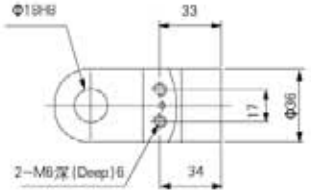

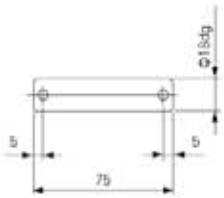

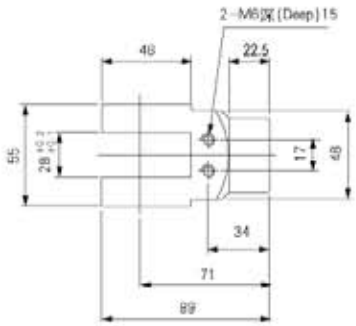

感应器接线型式
Cable connect type of sensor switch



配件与组装(铝合金气缸管使用)
kits and assembly
(for aluminium alloy tube)

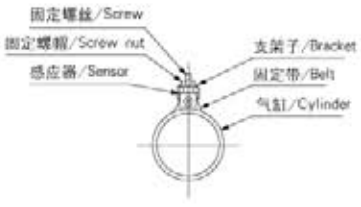

旋转夹紧缸SCR(L)系列
ROTARY CLAMPING CYLINDER SCR(L) SERIES

BANGYE®



内部结构图/Inner structure drawings

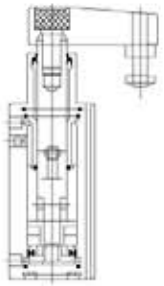

规格表/Specification table

项目(Item) / 缸径(Bore) mm	Φ12	Φ16	Φ20	Φ25	Φ32	Φ40	Φ50	Φ63
作用形式/Action type	复动型/Double action							
使用流体/Working medium	空气/Filtered air							
使用压力范围/Working pressure range [kgf/cm²(kpa)]	1.5～9.5(150～950)							
使用温度/Working temperature ℃	0～60							
使用速度/Working speed (mm/sec)	30～500							
回转行程/Rotation travel (mm)	7		10		15		19	
下压行程/Clamping travel (mm)	10 、20		10 、20		10 、20		25 、50	
旋转角度/Rotation angle	90° ±10°							
旋转方向/Rotation direction	左转(由右向左)-L,右转(由左向右)-R/Anti-clockwise - L,Clockwise -R							
缓冲装置/Cushion device	橡胶垫片缓冲/Rubber mat cushion							
润滑/Lubrication	自由供给方式/Oil free							
口径/Port size	M5X0.8P				PT 1/8		PT 1/4	
磁石装置/Magnet device	附磁石/With magnet							

重量表/Weight table

单位/Unit:Kg

行程/规格(Travel/Dimension)	Φ12	Φ16	Φ20	Φ25	Φ32	Φ40	行程/规格(Travel/Dimension)	Φ50	Φ63
10	0.1	0.2	0.3	0.4	0.6	0.8	25	1.5	2
20	0.1	0.2	0.3	0.4	0.6	0.8	50	1.6	2

订购称呼代号/Ordering code

SC | R — 机种式杆/Cylinder type



L：表示左转固定型式(由右向左)
Rotation left fixed type (anti-clockwise)

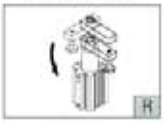

R：表示右转固定型式(由左向右)
Rotation right fixed type (clockwise)

32 — 气缸内径/Cylinder ID

12 – Φ12mm
16 – Φ16mm
20 – Φ20mm
25 – Φ25mm
32 – Φ32mm
40 – Φ40mm
50 – Φ50mm
63 – Φ63mm

X

10 — 气缸行程/Cylinder travel

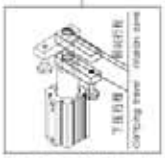

行程表示下压行程(回转行程不包括)
Travel is clamping travel (rotation travel not include)

Φ12–10,20 mm
Φ16–10,20 mm
Φ20–10,20 mm
Φ25–10,20 mm
Φ32–10,20 mm
Φ40–10,20 mm
Φ50–25,50 mm
Φ63–25,50 mm

–

F — 附固定座/With fixed set



无记号：不附固定座
Blank, Without fixed base
F：表示附法兰固定座
F, With flange base

–

SE | 2 — 感应装置/Sensor device

CS-30E | SE | 2

注/remark：Φ20～63使用/Available
SE：感应器种类型/Sensor device(CS-30E)
2：感应器数量/Sensor quantity

CS-80 | SD | 2

注/Remark：Φ12～63使用/Available
SD：感应器种类型/Sensor device(CS-80)
5/8：感应器种类型/Sensor device(CS-5/8)
SH：感应器种类型/Sensor device(CS-SH)
SDN：感应器种类型/Sensor device(CS-SDNPN)
10/3*：感应器种类型/Sensor device(CS-10/3NP)
2：感应器数量/Sensor quantity
1 = 1个感应器/One sensor device
2 = 2个感应器(选配件)/Two sensor device(available)

旋转夹紧缸SCR(L)系列
ROTARY CLAMPING CYLINDER SCR(L) SERIES

BANGYE®

理论出力表/Table for theoretic power

型式/Code	主轴/Principal axis (mm)	作动方向 Working direction	受压面积 Pressure area(cm^2)	使用压力(kgf/cm^2)			
				3	5	7	10
SCR(I)12	6	下压/Press	0.8	2.4	4	5.6	8
		上升/Lift	1.1	3.3	5.5	7.7	11
SCR(L)16	8	下压/Press	1.5	4.5	7.5	10.5	15
		上升/Lift	2	6	10	14	20
SCR(L)20	12	下压/Press	2	6	10	14	20
		上升/Lift	3	9	15	21	30
SCR(L)25	12	下压/Press	3.7	11.1	18.5	25.7	37
		上升/Lift	4.9	14.7	24.5	34.3	49
SCR(L)32	16	下压/Press	6	18	30	42	60
		上升/Lift	8	24	40	56	80
SCR(L)40	16	下压/Press	10.5	31.5	52.5	73.5	105
		上升/Lift	12.5	37.5	62.5	87.5	125
SCR(L)50	20	下压/Press	16.5	49.5	82.5	115.5	165
		上升/Lift	19.6	58.8	98	137.2	196
SCR(L)63	20	下压/Press	28	84	140	196	280
		上升/Lift	31.2	93.6	156	218.4	312

注意事项/Matters needing attention

- 最高使用压力和气缸速度，随压板的长度变化，如果压板过大或作动速度过快，就可能导致气缸损坏，请参照表一及表二进行设计。
  The highest working pressure and working speed should changed according to the length of clamping plate. If the clamping plate too large or working too fast, it may break the cylinder ,so please refer table one and table two to design the clamping plate.
- 使用在焊接场合时，请注意不可有焊渣附着或有油液溅落在主轴表面上，可能会使迫紧损伤，导致漏气。
  When the cylinder working in the welding environment,please do not break the welding slag or liquid on the piston rod,it may break the cylinder.
- 压紧面须与气缸的安装面保持平行。
  The clamping surface should be paralleled the cylinder's install surface.
- 夹持工件请在下压行程中操作，不要在旋转行程中执行工作，同时要确保夹紧后，工件不会移动，再开始进行工作。
  The parts should be clamped during the clamping travel,not rotation travel.After the clamp,user should assure the parts can not be moved,then start the working.
- 请以直立下压方式操作气缸，水平操作或者是使用压板侧面进行工作，会导致无法夹紧或气缸损坏的情形发生。
  Please operate the clamping travel perpendicularly,if operate horizontally or load on the side of rocker,it can not clamp the parts,or even break the cylinder.
- 安装压板时，请用虎钳或扳手等工具固定住压板后，在锁紧压板固定螺丝，锁紧力矩，请参照表三进行锁定动作。
  When install rocker,please use spanner or pliers fix the rocker,then install the rocker screw.As the torsional moment,please refer table three.

表一/Table one

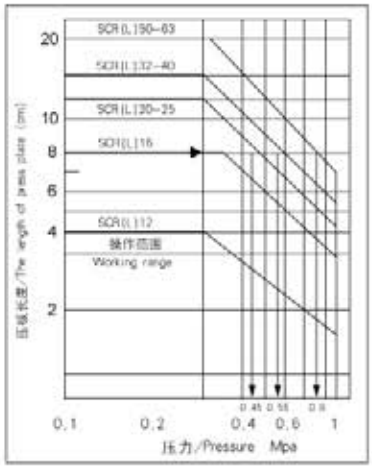

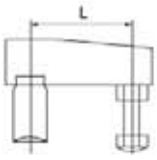

举例/Sample

当压板长度为6cm，压力应小于
When the length of clamping plate less than 6cm ,the pressure should be less than
SCR(L)20 · 25:0.65Mpa
SCR(L)32 · 40:0.9Mpa
SCR(L)50 · 63:1Mpa

表二/Table two

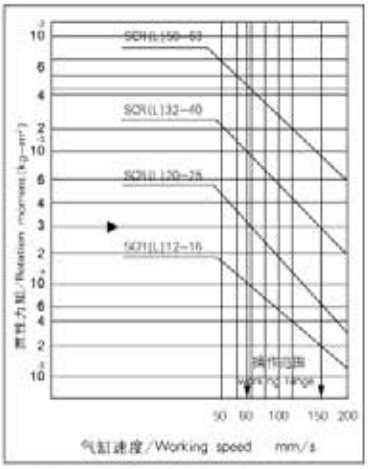

举例/Sample

当压板惯性力矩为/When the rotation moment is
$4 \times 10^{-4} kg-m^2$
气缸速度应小于/The cylinder's speed should less then
SCR(L) 20 · 25:55mm/s
SCR(L) 32 · 40:12mm/s

表三
Table three

缸径/Bore(mm)	标准力矩/Standard moment(N-m)
Φ12	0.4~0.6
Φ16	2~2.4
Φ20、Φ25	4~6
Φ32、Φ40	8~10
Φ50、Φ63	14~16

安装方式/Installation mode

左转方式-SCL型式/Rotation left type-SCL series

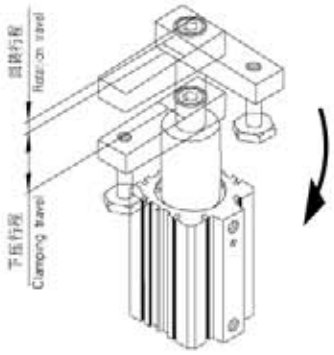

右转方式-SCR型式/Rotation right-SCR series

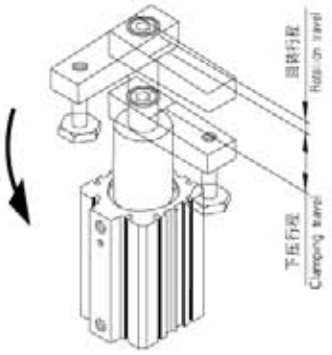

固定及安装型式/Fixed and install type

底部固定型式/Base fixed type



上部固定型式/Up side fixed type

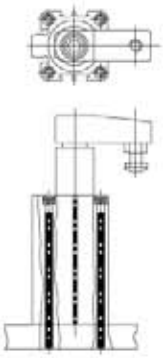

底部固定型式- F/Base fixed type-F

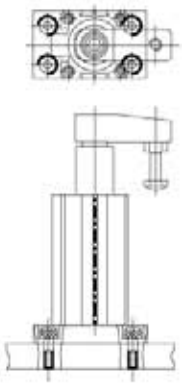

上部固定型式/Up side fixed type

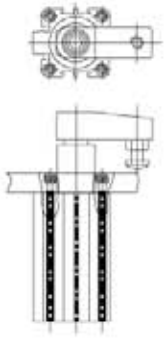

外观图形尺寸/Outside drawings and dimension

Φ20～Φ63　　底部固定型式/Base fixed type

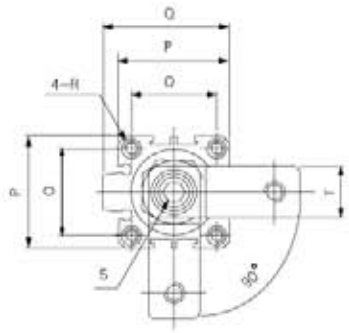

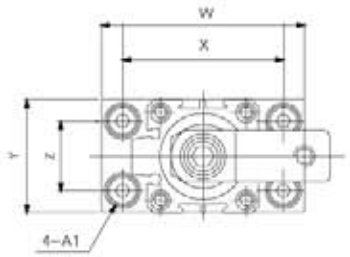

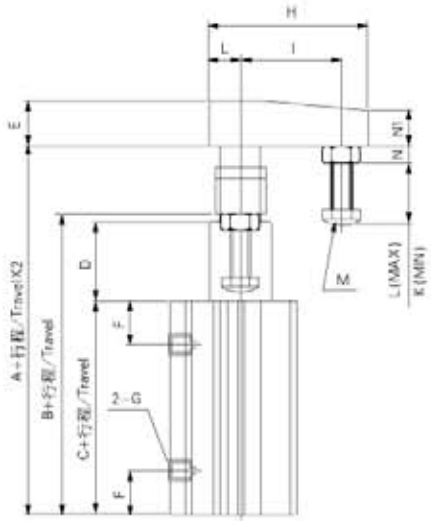

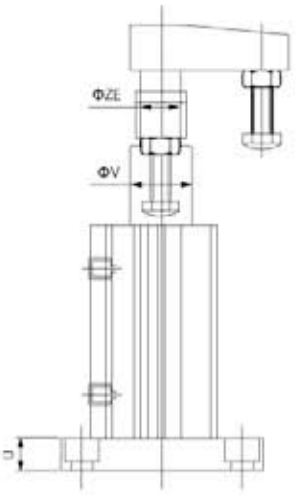

缸径 bore	A	A1	B	C	D	E	F	G	H	I	J	K	L	M
Φ20	92.3	钻孔/HoleΦ5.5,柱孔/Bolt holeΦ9.5x5.5深/Deep	82.3	59.5	20.3	15	7.5	M5X0.8P	51	35	9	4	12	M6X1.0PX25L 六角螺栓/Hexagon bolt
Φ25	93.6	钻孔/HoleΦ6.5,柱孔/Bolt holeΦ11X6.5深/Deep	83.6	61.2	20	15	8	M5X0.8P	51	35	9	4	12	M6X1.0PX25L 六角螺栓/Hexagon bolt
Φ32	113	钻孔/HoleΦ6.5,柱孔/Bolt holeΦ11X6.5深/Deep	98	64	31	18	9	PT1/8	62.5	40	12.5	5.5	25	M8X1.25PX40L 六角螺栓/Hexagon bolt
Φ40	116.9	钻孔/HoleΦ9, 柱孔/Bolt holeΦ14X8.5深/Deep	100	66.5	30.3	18	10	PT1/8	62.5	40	12.5	5.5	25	M8X1.25PX40L 六角螺栓/Hexagon bolt
Φ50	159.5	钻孔/HoleΦ9, 柱孔/Bolt holeΦ14X8.5深/Deep	140.9	78.6	59.6	22	10.8	PT1/4	94	60	20	8	32	M10X1.5PX50L 六角螺栓/Hexagon bolt
Φ63	162.8	钻孔/HoleΦ9, 柱孔/Bolt holeΦ14X8.5深/Deep	143.8	82.5	58.6	22	11	PT1/4	94	60	20	8	32	M10X1.5PX50L 六角螺栓/Hexagon bolt

缸径 Bore	N	N1	O	P	Q	R	S	T	U	V	W	X	Y	Z	ZE
Φ20	5	12	24	34	–	钻孔/HoleΦ4.3 攻牙/Thread M5x0.8x6 深/Deep 柱孔/Bolt holeΦ7x5 深(两边)/Deep(two side)	1.2P螺栓/Screw bolt	16	8	19	62	48	35	22	12
Φ25	5	12	28	40	–	钻孔/HoleΦ5.1 攻牙/Thread M6x1x8 深/Deep 柱孔/Bolt holeΦ8x6 深(两边)/Deep(two side)	M8X1.25P螺栓/Screw bolt	16	10	24	70	55	40	28	12
Φ32	6.5	14	34	44	50	钻孔/HoleΦ5.1 攻牙/Thread M6x1x8 深/Deep 柱孔/Bolt holeΦ8x6 深(两边)/Deep(two side)	M10X1.5P螺栓/Screw bolt	20	10	30	76	60	46	30	16
Φ40	6.5	14	40	52	58	钻孔/HoleΦ6.8 攻牙/Thread M8x1.25x10 深/Deep 柱孔/Bolt holeΦ8x6 深(两边)/Deep(two side)	M10X1.5P螺栓/Screw bolt	20	12	30	86	70	55	40	16
Φ50	8	18	48	62	71	钻孔/HoleΦ6.8 攻牙/Thread M8x1.25x10 深/Deep 柱孔/Bolt holeΦ11x8.5 深(两边)/Deep(two side)	M12X1.5P螺栓/Screw bolt	26	12	39	96	80	63	40	20
Φ63	8	18	60	75	84.5	钻孔/HoleΦ6.8 攻牙/Thread M8x1.25x10 深/Deep 柱孔/Bolt holeΦ11x8.5 深(两边)/Deep(two side)	M12X1.5P螺栓/Screw bolt	26	12	50	108	92	75	60	20

技术资料/Technical data

安装与使用/Install&use

- 工作中负载有变化，应选用输出力充裕的气缸，在高温条件下，应选用相应的耐高温气缸。
  The load would be changed during working process,so the cylinder with enough output force should be chosen ,on the case of high temperature , operator is suggested to choose the cylinder with high-temp seals!
- 气缸配管前，必须清除管道内的杂物，防止杂物进入气缸内。
  Before put in the air tube on the cylinder ,the inside surface of the pipe must be cleaned .In order to prevent sundries from entering into cylinder.
- 气缸使用介质应经过40μm以上滤芯过滤后方可使用。
  The medium used by cylinder can not be put into use until it has pass filtering by certain filtering element above 40um.
- 在低温环境下，应采取抗冻措施，防止系统的水分结冰。
  Under condition of low temperature ,the anti-freezing measure must be adopted ,so as to avoid freezing of engineering system.
- 气缸在工作过程中应尽可能避免受侧向负载，以维持气缸的正常工作和使用寿命。
  During the working process ,the cylinder should be avoid side-load,in order to maintain normal working and assure the lifetime of the cylinder.
- 气缸拆下长时间不使用，要注意表面防锈，进排气口应加防尘堵塞帽。
  If the cylinder has been out of work for a long time ,operator should take notice of surface rustproof,the dust proof cap is suggested to be added at air in and out hole .

气缸理论出力计算方法/Formula for cylinder output power

$$F = P \times A$$

- A：活塞受压面积/Piston pressed area (cm^2)
- P：工作压力/Working pressure (Kgf/cm^2)
- F：气缸理论出力/The output power of cylinder (Kgf)

气缸理论出力表/Table for theoretic power of a cylinder

气缸内径 Cylinder ID	活塞杆外径 Out diameter of piston rod	动作方式 Action type		受压面积 Pressure area(mm^2)	空气压力/Air pressure (Kgf/cm^2)								
					1	2	3	4	5	6	7	8	9
25	14	复动型 Double action	压侧/Push side	4.91	4.91	9.82	14.73	19.64	24.55	29.46	34.37	39.28	44.19
			拉侧/Pull side	3.37	3.37	6.74	10.11	13.48	16.85	20.22	23.59	26.96	30.33
32	16	复动型 Double action	压侧/Push side	8.04	8.04	16.08	24.12	32.16	40.20	48.24	56.28	64.32	72.36
			拉侧/Pull side	6.04	6.04	12.16	18.12	24.16	30.20	36.24	42.28	48.32	54.36
40	16	复动型 Double action	压侧/Push side	12.56	12.56	25.12	37.68	50.24	62.80	75.36	87.92	100.24	113.04
			拉侧/Pull side	10.55	10.55	21.10	31.65	42.20	52.75	63.30	73.85	84.40	94.95
50	20	复动型 Double action	压侧/Push side	19.63	19.63	39.26	58.89	78.52	98.15	117.78	137.41	157.04	176.67
			拉侧/Pull side	16.49	16.49	32.98	49.47	65.96	82.45	98.94	115.43	139.92	148.41
63	20	复动型 Double action	压侧/Push side	31.17	31.17	62.34	93.51	124.68	155.85	187.02	218.19	249.36	280.53
			拉侧/Pull side	28.03	28.03	56.06	84.09	112.12	140.15	168.18	196.21	224.24	252.27

气压转角下压缸HSR(L)系列
SWING CLAMP CYLINDER HSR(L) SERIES

BANGYE®

产品特性/Product features

1）空压转角下压缸主要使用在空间狭小，且无任何辅助压板下，能轻易的夹持及放松工作。

The swing clamp cylinder is main used in some very small and without press plate place, it can easy pick and release.

2）本空压转角下压缸为下拉式气缸，并有五种规格及两种可360° 任意安装之压板供选择。

This kind swing clamp is the down pull type it has five kinds size and can be install in the 360 press plate)



注意事项/Matters needing attention

1）在使用空压转角下压缸时，若需要增长压板之长度时，请勿大于原长之1.5倍。
When use the swing clamp cylinder ,if user need to enlarge the clamping plate ,it should be no large them 1.5 times clamping plate.

2）建议使用空压转角下压缸时，请加装流量控制阀，避免因速度过快而损坏缸体及内部零件。
We suggest using the flow control valve to control the speed so as to protect the cylinder body and inner parts.

规　格/Specification

内径/Bore (mm)	25	32	40	50	63
动作型式/Action type	复动型/Double action				
工作介质/Work medium	空气/Filtered air				
使用压力范围/Operation pressure range(Kgf/cm²)	1.5～9.5				
保证耐压力/Proof pressure(Kgf/cm²)	13.5				
使用温度范围/Available temperature ℃	0～60				
使用速度范围/Operation speed (mm/s)	30～500				
回转行程/Rotation travel	13	15		20	
下压行程/Clamping travel	13	15		20	
旋转角度/Rotation angle	90°				
旋转方向/Rotation direction	左转(由右向左)—L；右转(由左向右)—R/Anti—clockwise — L；clockwise —R				
接管口径/Port size	M5X0.8				PT1/8

订购码/Ordering code

HSR —— 40 X 15 —— D

型　号/Symbol

HSR：右转固定式(由左向右)
Right mount(clockwise)
HSL：左转固定式(由右向左)
left mount(anti—clockwise)

缸　径/Bore

Φ25—25mm
Φ32—32mm
Φ40—40mm
Φ50—50mm
Φ63—63mm

行程/Travel

行程表示下压行程
(回转行程不包括)
Travel is clamping travel
(rotation travel not include)
Φ25—13mm
Φ32—15mm
Φ40—15mm
Φ50—20mm
Φ63—20mm

压板型式/Rocker type

D：双边压板/Double side rocker
空白：单边压板/Blank:Single side rocker
注：Φ25无双边压板
Bore 25mm without double side rocker

基本尺寸/Basic specification

Φ25～Φ63

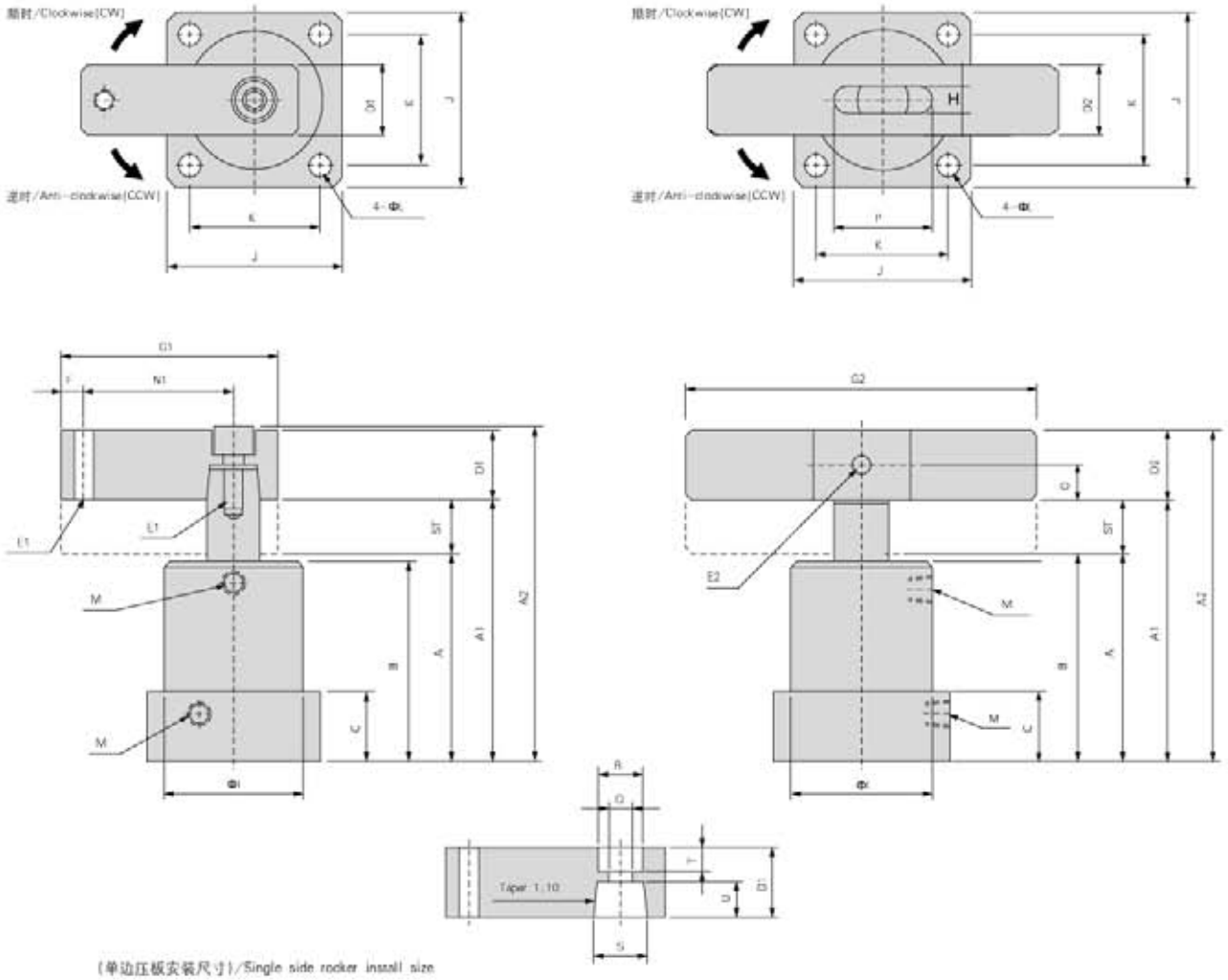

(单边压板安装尺寸)/Single side rocker install size

内径/符号(Bore/Symbol)	ST	A	A1	A2	A3	B	C	D1	D2	E1	E2	F	G1	G2
25	26	71	97	(113)	–	67	23	15.9	–	M6	–	6	50	–
32	30	85	115	(137.4)	134	78	28	14	19	M8	Φ8	8	70	140
40	30	85	115	(137.4)	134	78	28	14	19	M8	Φ8	8	75	140
50	40	100	140	(168.2)	162.2	90	31	18	22.2	M10	Φ8	10	85	160
63	40	100	140	(168.2)	162.2	90	31	18	22.2	M10	Φ8	10	95	160

内径/符号(Bore/Symbol)	H	I	J	K	L	M	N1	O	P	Q	R	S	T	U
25	–	Φ36	38	30	Φ4.6	M5x0.8	35	–	–	Φ6.8	Φ11.5	Φ14	5	8.5
32	9	Φ46	50	40	Φ5.6	PT1/8	50	9.5	23	Φ9	Φ74	Φ16	7	9.5
40	9	Φ55	60	48	Φ6.8	PT1/8	55	9.5	23	Φ9	Φ14	Φ16	7	9.5
50	10	Φ65	70	57	Φ6.8	PT1/8	60	11.1	29	Φ11	Φ18	Φ20	9	12.5
63	10	Φ78	83	67	Φ9	PT1/8	70	11.1	29	Φ11	Φ18	Φ20	9	12.5