BANGYE®
THE POWER OF INNOVATION

SINCE 2002

气动执行器

PNEUMATIC ACTUATOR

新品上市 NEW PRODUCTS

2019 / 2020









上海邦业气动液压件有限公司

SHANGHAI BANGYE PNEUMATIC & HYDRAULIC COMPONENTS CO., LTD.



+邦业简介
BANGYE INTRODUCTION

We are a leading manufacturer of die casting,especially in the field of pneumatic and automotive. Above 90% of the production procedures are done by ourselves,which makes us different from the other suppliers. With more than 17 years of OEM experiences, we play a leading role in this area. Our production capacity, comprehensive services as well as abundant experience enable us to be your best choice.

我们是压铸的领先制造商，特别是在气动和汽车配件领域。其中超过 90%以上的生产工艺均是由我们自己完成的，这是我们与其他供应商不同的地方。
我们有超过15年的OEM经验，使我们在代工领域起着重要作用。我们的生产能力，综合服务以及丰富的经验使我们成为您的最佳选择。

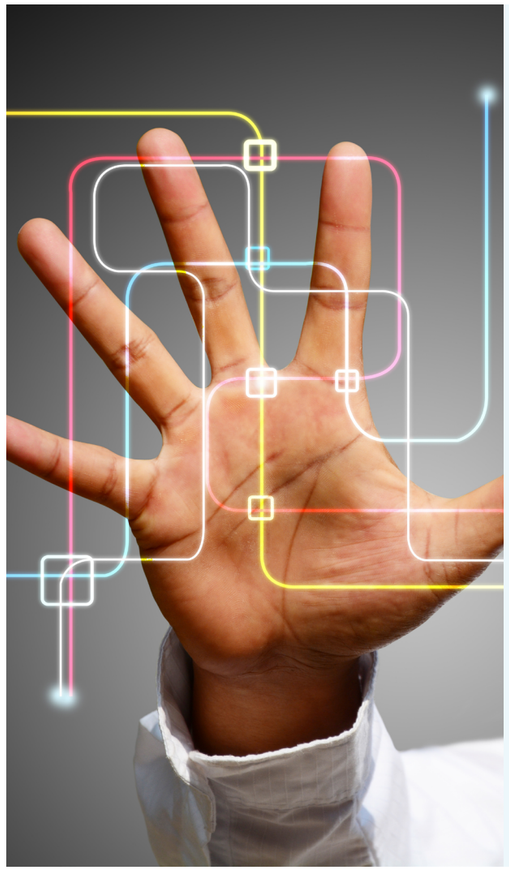

Corporate Data

公司信息

Founded 2002

注册日期：2002年

Registered Capital：37 million RMB

注册资金：2200万人民币

Annual Sales：12 million USD

年销售额：8千万元

No.Employees：180-220

员工人数：180-220

Location：Shanghai China

公司地址：中国上海

+气动执行器
ATY SERIES / PNEUMATIC ACTUATOR



压铸铝质（ATY）缸体，产品轻巧、外观优美，内表面细磨精加工，内部和外部均采用高级防腐技术，气缸摩擦系数小，使用寿命长，抗腐蚀性能强。

双活塞齿轮齿条式设计，结构紧凑、安装位置对称、改变输出轴转向方便，使用寿命长、动作迅速。活塞齿条背面装有复合轴承及导向环，动作精确、摩擦系数小、使用寿命延长。

组合式预负荷镀层弹簧，工作寿命长。

高精度齿轮和齿条，啮合间隙小、精度高，输出功率大。不锈钢紧固件，安全美观，抗腐蚀性强。

Die casting aluminum ATY body with both internal and external corrosion protection having honed cylinder surface for longer life and low coefficient of friction.

Dual piston rack and pinion design for compact onstruction,symmetric mounting position,high-cycle life and fast operation,reverse rotation can be accomplished in the field by simply inverting the pistons.

Multiple bearings and guides on racks and pistons,low friction,high cycle life and prevent shaft blowout.

Modular preloaded spring cartridge design,with coated spring for simple versatile range,greater safety and corrosion resistance,longer cycle life.

Fully machined teeth on piston and pinion for accurate low backlash rack and pinion engagement,maximum efficiency,stainless steel fasteners for long term corrosion resistance.

+压铸铝
ATY / DIE CASTING ALUMINUM

零件材质
MATERIAL

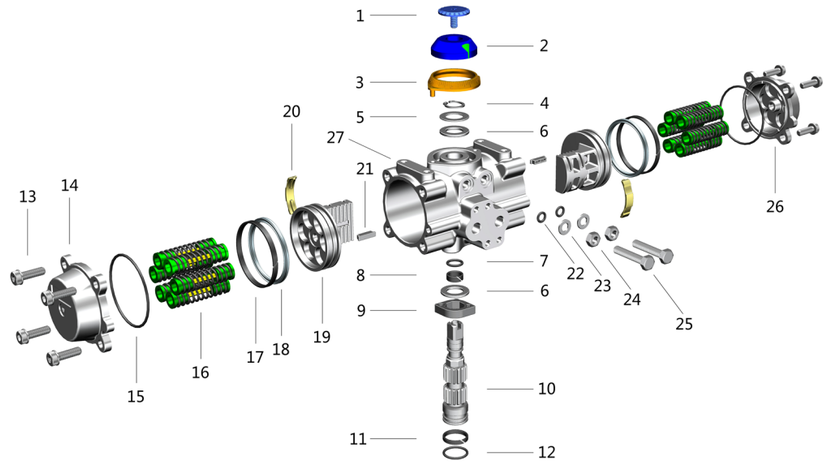

NO.	Part Name 零件名称		Quantity 数量	Material 材质
1	Indicator Nut	指示螺帽	1	ABS
2	Indicator	指示器	1	ABS
3	Indicator	指示表	1	ABS
4	Elastic Ring	弹性挡圈	1	Ss301
5	Shim	垫片	1	POM
6	Wear Pad	耐磨垫片	2	POM
7	Shaft Type O Ring	轴上O型圈	1	NBR
8	Wear Resistant Ring	耐磨环	1	POM
9	Adjusting Cam	调节凸轮	1	WCB
10	Output Shaft	输出轴	1	C45
11	Wear Resistant Ring	耐磨环	1	POM
12	Shaft Under the O Ring	轴下O型圈	1	NBR
13	End Cap Bolt	端盖螺栓	8	Ss301
14	Left End Cover	左端盖	1	Die casting Alu
15	Spring Set	端盖O型圈	2	NBR
16	End Cover Type O Ring	弹簧组	12	55Crsi
17	Wear Resistant Ring	耐磨环	2	POM
18	Piston Seal Ring	活塞密封圈	2	NBR
19	Piston	活塞	2	Die casting Alu
20	Piston Guide Shoe	活塞导向瓦	2	POM
21	Guide Block	导向块	2	PA66
22	Bolt with O Ring	调节螺栓O型圈	2	NBR
23	Shim	垫片	2	Ss301
24	Nut	螺帽	2	Ss301
25	Adjusting Bolt	调节螺栓	2	Ss301
26	Right End Cover	右端盖	1	Die casting Alu
27	Cylinder Body	缸体	1	Die casting Alu

+气动执行器
AT SERIES / PNEUMATIC ACTUATOR



挤压铝质（AT）缸体，内表面细磨精加工，内部和外部均采用高级防腐技术，气缸摩擦系数小，使用寿命长，抗腐蚀性能强。

双活塞齿轮齿条式设计，结构紧凑、安装位置对称、改变输出轴转向方便，使用寿命长、动作迅速。活塞齿条背面装有复合轴承及导向环，动作精确、摩擦系数小、使用寿命延长。

组合式预负荷镀层弹簧，工作寿命长。

高精度齿轮和齿条，啮合间隙小、精度高，输出功率大。不锈钢紧固件，安全美观，抗腐蚀性强。

Extruded aluminum AT body with both internal and external corrosion protection having honed cylinder surface for longer life and low coefficient of friction.

Dual piston rack and pinion design for compact onstruction,symmetric mounting position,high-cycle life and fast operation,reverse rotation can be accomplished in the field by simply inverting the pistons.

Multiple bearings and guides on racks and pistons,low friction,high cycle life and prevent shaft blowout.

Modular preloaded spring cartridge design,with coated spring for simple versatile range,greater safety and corrosion resistance,longer cycle life.

Fully machined teeth on piston and pinion for accurate low backlash rack and pinion engagement,maximum efficiency,stainless steel fasteners for long term corrosion resistance.

+铝型材
AT / EXTRUDED ALUMINUM

零件材质
MATERIAL

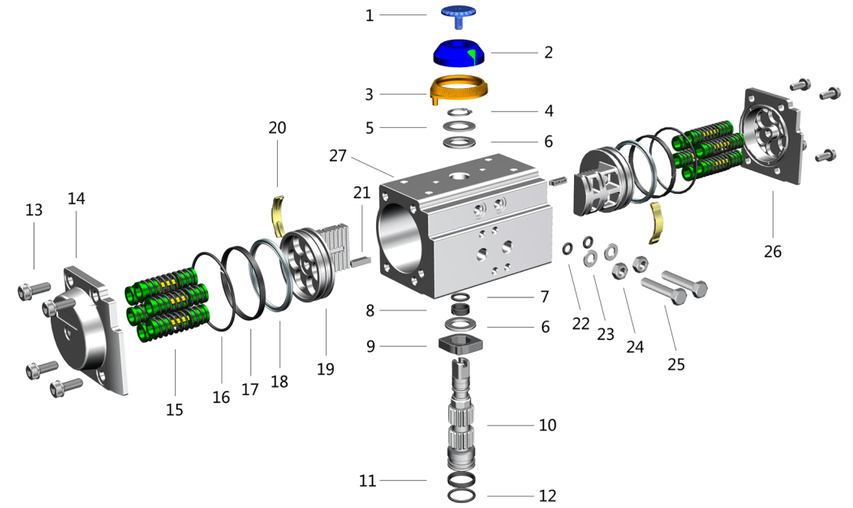

NO.	Part Name 零件名称		Quantity 数量	Material 材质
1	Indicator Nut	指示螺帽	1	ABS
2	Indicator	指示器	1	ABS
3	Indicator	指示表	1	ABS
4	Elastic Ring	弹性挡圈	1	Ss301
5	Shim	垫片	1	POM
6	Wear Pad	耐磨垫片	2	POM
7	Shaft Type O Ring	轴上O型圈	1	NBR
8	Wear Resistant Ring	耐磨环	1	POM
9	Adjusting Cam	调节凸轮	1	WCB
10	Output Shaft	输出轴	1	C45
11	Wear Resistant Ring	耐磨环	1	POM
12	Shaft Under the O Ring	轴下O型圈	1	NBR
13	End Cap Bolt	端盖螺栓	8	Ss301
14	Left End Cover	左端盖	1	Die casting Alu
15	Spring Set	弹簧组	12	55Crsi
16	End Cover Type O Ring	端盖O型圈	2	NBR
17	Wear Resistant Ring	耐磨环	2	POM
18	Piston Seal Ring	活塞密封圈	2	NBR
19	Piston	活塞	2	Die casting Alu
20	Piston Guide Shoe	活塞导向瓦	2	POM
21	Guide Block	导向块	2	PA66
22	Bolt with O Ring	调节螺栓O型圈	2	NBR
23	Shim	垫片	2	Ss301
24	Nut	螺帽	2	Ss301
25	Adjusting Bolt	调节螺栓	2	Ss301
26	Right End Cover	右端盖	1	Die casting Alu
27	Cylinder Body	缸体	1	6005-T5

+双作用执行器
DOUBLE ACTING ACTUATORS

工作原理
OPERATION PRINCIPLE

CCW

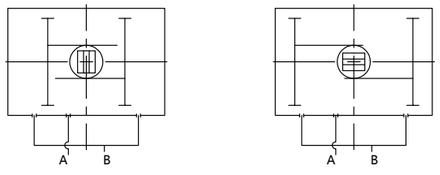

0° 90°

A 口进气，压缩空气推动活塞向外运动，使执行器输出轴逆时针旋转（0°-90°），B 口排气

B 口进气，压缩空气推动活塞向内运动，使执行器输出轴顺时针旋转（90°-0°），A 口排气

Air to port A forces the pistons outwards,causing the pinion to turn counterclockwise while the air is being exhausted from port B

Air to port B forces the pistons inwards,causing the pinion to turn clockwise while the air is being exhausted from port A

CW

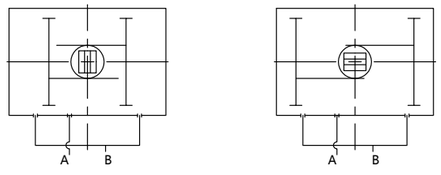

0° 90°

A 口进气，压缩空气推动活塞向外运动，使执行器输出轴顺时针旋转（0°-90°），B 口排气

B 口进气，压缩空气推动活塞向内运动，使执行器输出轴逆时针旋转（90°-0°），A 口排气

Air to port A forces the pistons outwards,causing the pinion to turn clockwise while the air is being exhausted from port B

Air to port B forces the pistons inwards,causing the pinion to turn counterclockwise while the air is being exhausted from port A

+单作用执行器
SPRING RETURN ACTUATORS

CCW

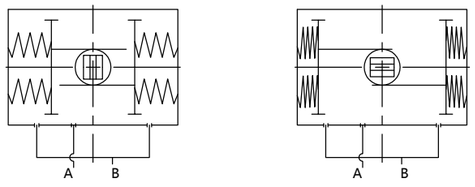

0° 90°

A 口进气，压缩空气克服弹簧力，推动活塞向外运动，执行器输出轴逆时针转动（0°-90°），B 口排气

执行器失气，活塞在弹簧力的作用下向内运动，执行器输出轴顺时针转动（90°-0°），A 口排气

Air to port A forces the pistons outwards,causing the spring to compress,the pinion turns counter clockwise while air is being exhausted from port B

Loss of air pressure on port A,the stored energy in the springs forces the pistons inwards.The pinion turns clockwise while air is being exhausted from port A

CW

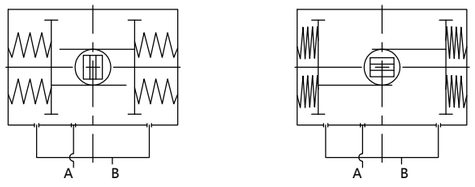

0° 90°

A 口进气，压缩空气克服弹簧力，推动活塞向外运动，执行器输出轴顺时针转动（0°-90°），B 口排气

执行器失气，活塞在弹簧力的作用下向内运动，执行器输出轴逆时针转动（90°-0°），A 口排气

Air to port A forces the pistons outwards,causing the spring to compress, the pinion turns clockwise while air is being exhausted from port B

Loss of air pressure on port A,the stored energy in the springs forces the pistons inwards.The pinion turns counterclockwise while air is being exhausted from port A

+双作用输出力矩
OUTPUT TORQUE OF DOUBLE ACTING ACTUATORS

工作原理
OPERATION PRINCIPLE

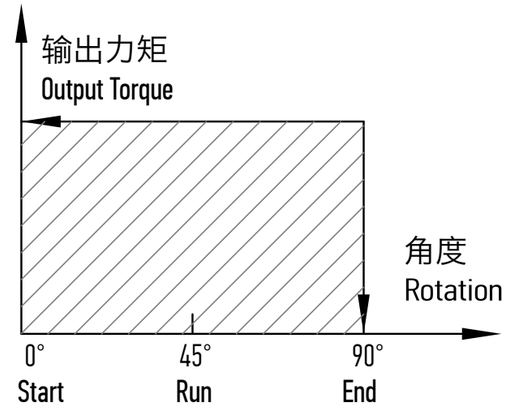

+气源压力
AIR SUPPLY PRESSURE (UNIT:BAR)

气压输出扭矩 OUTPUT TORQUE OF AIR TO SPRING(BAR)

Model	2.5	3	4	5	6	7	8
AT-52DA	9.2	11	14.7	18.4	22.1	25.8	29.5
AT-63DA	15.1	18.1	24.1	30.1	36.1	42.1	48.2
AT-75DA	25.2	30.2	40.3	50.3	60.4	70.5	80.5
AT-83DA	38.5	46.2	61.6	77.1	92.5	107.9	123.3
AT-92DA	56.8	68.2	90.9	113.6	136.3	159.1	181.8
AT-105DA	82.2	98.7	131.6	164.4	197.3	230.2	263.1
AT-125DA	128	154	205	256	308	359	410
AT-140DA	219	263	351	439	526	614	702
AT-160DA	334	401	535	668	802	935	1069
AT-190DA	538	646	861	1077	1292	1508	1723
AT-210DA	658	789	1052	1316	1579	1842	2105
AT-240DA	894	1073	1432	1788	2145	2505	2860
AT-280DA	1315	1578	2104	2631	3157	3683	4209
AT-300DA	1845	2214	2953	3691	4429	5168	5906
AT-350DA	2740	3288	4385	5481	6577	7673	8770
AT-400DA	4289	5147	6863	8579	10294	12009	13725

单作用输出力矩
OUTPUT TORQUE OF SPRING RETURN ACTUATORS

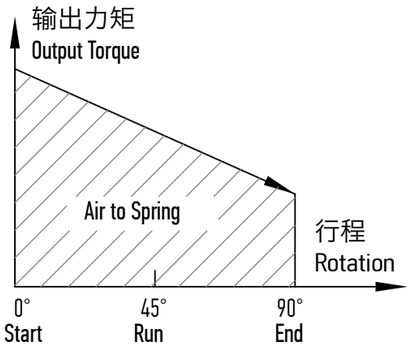

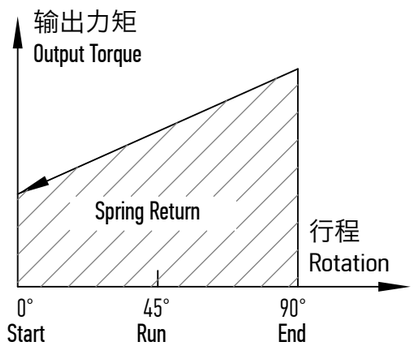

气源压力
AIR SUPPLY PRESSURE (UNIT:BAR)

气压输出扭矩 OUTPUT TORQUE OF AIR TO SPRING(BAR)																弹簧输出扭矩 SPRINGS' OUTPUT	
气压 AIR PRESSURE		2.5		3		4		5		6		7		8			
MODEL	SPRING(QTY)	0°	90°	0°	90°	0°	90°	0°	90°	0°	90°	0°	90°	0°	90°	90°	0°
AT-52SR ATY-52SR	S5	5.4	3.7													5.5	3.8
	S6	4.7	2.5	6.5	4.3											6.7	4.5
	S7	3.9	1.4	5.7	3.2	9.4	6.9									7.8	5.3
	S8			5	2.1	8.7	5.8	12.4	9.5							8.9	6
	S9					7.9	4.7	11.6	8.4	15.3	12.1					10	6.8
	S10					7.2	3.6	10.9	7.3	14.6	11	18.3	14.7	22	18.4	11.1	7.5
	S11							10.1	6.2	13.8	9.9	17.5	13.6	21.2	17.3	12.2	8.3
	S12							9.4	5.1	13.1	8.8	16.8	12.5	20.5	16.2	13.3	9
AT-63SR ATY-63SR	S5	9.3	6.6													8.5	5.8
	S6	8.2	4.9	11.2	7.9											10.2	6.9
	S7	7	3.2	10	6.2	16	12.2									11.9	8.1
	S8			8.9	4.5	14.9	10.5	20.9	16.5							13.6	9.2
	S9					13.7	8.7	19.7	14.7	25.7	20.7					15.4	10.4
	S10					12.6	7	18.6	13	24.6	19	30.6	25	36.7	31.1	17.1	11.5
	S11							17.4	11.3	23.4	17.3	29.4	23.3	35.5	29.4	18.8	12.7
	S12							16.3	9.6	22.3	15.6	28.3	21.6	34.4	27.7	20.5	13.8
AT-75SR	S5	14.1	10.0													14.5	10.5
	S6	11.9	6.9	16.9	11.9											17.4	12.7
	S7	9.7	3.9	14.7	8.9	24.8	19.0									20.3	14.8
	S8			12.4	5.8	22.5	15.9	32.5	25.9							23.2	16.9
	S9					20.3	12.9	30.3	22.9	40.4	33					26.1	19.0
	S10					18.1	9.8	28.1	19.8	38.2	29.9	48.3	40.0	58.3	50.0	29.0	21.1
	S11							25.9	16.8	36.0	26.9	46.1	37.0	56.1	47.0	31.9	23.2
	S12							23.7	13.7	33.8	23.8	43.9	33.9	53.9	43.9	34.7	25.3

BANGYE THE POWER OF INNOVATION

工作原理
OPERATION PRINCIPLE

气压输出扭矩 OUTPUT TORQUE OF AIR TO SPRING(BAR)																弹簧输出扭矩 SPRINGS' OUTPUT	
气压 AIR PRESSURE		2.5		3		4		5		6		7		8			
MODEL	SPRING(QTY)	0°	90°	0°	90°	0°	90°	0°	90°	0°	90°	0°	90°	0°	90°	90°	0°
AT-83SR	S5	21.9	14.3													23.0	15.8
	S6	18.5	9.4	26.2	17.1											27.6	19.0
	S7	15.2	4.6	22.9	12.3	38.3	27.7									32.2	22.1
	S8			19.6	7.4	35.0	22.8	50.5	38.3							36.8	25.3
	S9					31.6	18.0	47.1	33.5	62.5	48.9					41.4	28.5
	S10					28.3	13.2	43.8	28.7	59.2	44.1	74.6	59.5	90.0	74.9	46.0	31.6
	S11							40.5	23.8	55.9	39.2	71.3	54.6	86.7	70.0	50.6	34.8
	S12							37.1	19.0	52.5	34.4	67.9	49.8	83.3	65.2	55.2	38.0
AT-92SR	S5	32.2	20.6													34.4	23.3
	S6	27.3	13.4	38.7	24.8											41.2	28.0
	S7	22.4	6.1	33.8	17.5	56.5	40.2									48.1	32.7
	S8			28.9	10.3	51.6	33.0	74.3	55.7							55.0	37.3
	S9					46.7	25.8	69.4	48.5	92.1	71.2					61.9	42.0
	S10					41.8	18.5	64.5	41.2	87.2	63.9	110.0	86.7	132.7	109.4	68.7	46.7
	S11							59.5	34.0	82.2	56.7	105.0	79.5	127.7	102.2	75.6	51.4
	S12							54.6	26.8	77.3	49.5	100.1	72.3	122.8	95.0	82.5	56.0
AT-105SR	S5	48.9	30.4													49.2	31.6
	S6	42.2	20.0	58.7	36.5											59.1	38.0
	S7	35.6	9.7	52.1	26.2	85.0	59.1									68.9	44.3
	S8			45.4	15.8	78.3	48.7	111.1	81.5							78.7	50.6
	S9					71.7	38.4	104.5	71.2	137.4	104.1					88.6	56.9
	S10					65.0	28.0	97.8	60.8	130.7	93.7	163.6	126.6	196.5	159.5	98.4	63.3
	S11							91.1	50.4	124.0	83.3	156.9	116.2	189.8	149.1	108.3	69.6
	S12							84.5	40.1	117.4	73.0	150.3	105.9	183.2	138.8	118.1	75.9
AT-125SR	S5	72.9	45.5													78.4	52.4
	S6	61.9	29.0	87.9	55.0											94.1	62.8
	S7	50.8	12.5	76.8	38.5	127.8	89.5									109.7	73.3
	S8			65.8	22.0	116.8	73.0	167.8	124.0							125.4	83.8
	S9					105.8	56.5	156.8	107.5	208.8	159.5					141.1	94.2
	S10					94.8	40.0	145.8	91.0	197.8	143.0	248.8	194.0	299.8	245.0	156.8	104.7
	S11							134.8	74.5	186.8	126.5	237.8	177.5	288.8	228.5	172.4	115.2
	S12							123.7	58.0	175.7	110.0	226.7	161.0	277.7	212.0	188.1	125.7
AT-140SR	S5	128.7	83.3													129.0	85.8
	S6	110.6	56.1	154.6	100.1											154.8	102.9
	S7	92.6	29.0	136.6	73.0	224.6	161.0									180.5	120.1
	S8			118.5	45.8	206.5	133.8	294.5	221.8							206.3	137.3
	S9					188.5	106.7	276.5	194.7	363.5	281.7					232.1	154.4
	S10					170.4	79.5	258.4	167.5	345.4	254.5	433.4	342.5	521.4	430.5	257.9	171.6
	S11							240.3	140.4	327.3	227.4	415.3	315.4	503.3	403.4	283.7	188.7
	S12							222.3	113.2	309.3	200.2	397.3	288.2	485.3	376.2	309.5	205.9

工作原理 OPERATION PRINCIPLE

气压输出扭矩 OUTPUT TORQUE OF AIR TO SPRING(BAR)																弹簧输出扭矩 SPRINGS' OUTPUT	
气压 AIR PRESSURE		2.5		3		4		5		6		7		8			
MODEL	SPRING(QTY)	0°	90°	0°	90°	0°	90°	0°	90°	0°	90°	0°	90°	0°	90°	90°	0°
AT-160SR	S5	187.0	114.7													208.3	139.7
	S6	157.6	70.9	224.6	137.9											250	168
	S7	128.2	27.0	195.2	94.0	329.2	228.0									292	196
	S8			165.8	50.2	299.8	184.2	432.8	317.2							333	223
	S9					270.4	140.3	403.4	273.3	537.4	407.3					375	251
	S10					241.0	96.4	374.0	229.5	508.0	363.5	641.0	496.5	775.0	630.5	417	279
	S11							344.6	185.6	478.6	319.6	611.6	452.6	745.6	586.6	458	307
	S12							315.2	141.7	449.2	275.7	582.2	408.7	716.2	542.7	500	335
AT-190SR	S5	327	212													293	190
	S6	285	147	393	255											352	227
	S7	243	82	351	190	566	405									410	265
	S8			309	125	524	340	740	556							469	303
	S9					482	275	698	491	913	706					527	341
	S10					440	210	656	426	871	641	1087	857	1302	1072	586	379
	S11							614	361	829	576	1045	792	1260	1007	645	417
	S12							572	296	787	511	1003	727	1218	942	703	455
AT-210SR	S5	369	258													360	260
	S6	311	178	442	309											432	313
	S7	253	99	384	230	647	493									503	365
	S8			326	150	589	413	853	677							575	417
	S9					531	333	795	597	1058	860					647	469
	S10					473	253	737	517	1000	780	1263	1043	1526	1306	719	521
	S11							679	437	942	700	1205	963	1468	1226	791	573
	S12							621	357	884	620	1147	883	1410	1146	863	625
AT-240SR	S5	533	372	712	550	1068	908									520	360
	S6	461	268	640	446	996	804	1354	1162							625	432
	S7	389	164	568	342	925	700	1282	1056	1640	1415					730	504
	S8			496	238	852	596	1210	953	1568	1310	1925	1668			834	576
	S9					780	490	1138	848	1495	1206	1852	1563	2210	1920	938	648
	S10					708	386	1066	745	1422	1102	1780	1458	2137	1816	1042	720
	S11							994	641	1350	998	1708	1355	2065	1712	1145	792
	S12									1278	894	1636	1250	1994	1608	1250	864
AT-280SR	S5	903	668	1193	961	1775	1547									1113	653.4
	S6	788	505	1080	792	1664	1372	2248	1952							1335	783.6
	S7	671	335	965	628	1553	1218	2141	1808	2729	2398					1558	914.2
	S8			843	463	1435	1052	2021	1640	2607	2228	3193	2816			1780	1044
	S9					1302	885	1895	1474	2488	2070	3081	2666	3674	3262	2003	1175
	S10					1201	724	1783	1311	2377	1895	2960	2485	3546	3070	2226	1306
	S11							1670	1145	2255	1735	2842	2320	3429	2908	2448	1436
	S12									2143	1565	2728	2154	3312	2745	2671	1567

BANGYE THE POWER OF INNOVATION

工作原理 OPERATION PRINCIPLE

气压输出扭矩 OUTPUT TORQUE OF AIR TO SPRING(BAR)																弹簧输出扭矩 SPRINGS' OUTPUT	
气压 AIR PRESSURE		2.5		3		4		5		6		7		8			
MODEL	SPRING(QTY)	0°	90°	0°	90°	0°	90°	0°	90°	0°	90°	0°	90°	0°	90°	90°	0°
AT-300SR	S5	1125	730	1504	1112	2262	1876									1237	730
	S6	962	495	1345	877	2111	1641	2877	2405							1484	876
	S7	805	260	1182	640	1948	1405	2714	2169	3480	2933					1731	1022
	S8			1022	405	1782	1168	2545	1930	3308	2692	4071	3454			1979	1168
	S9					1625	932	2385	1695	3149	2458	3913	3221	4677	3984	2226	1314
	S10					1462	701	2225	1460	2988	2222	3750	2987	4515	3748	2474	1460
	S11							2065	1225	2824	1987	3585	2750	4348	3512	2721	1601
	S12									2662	1750	3428	2514	4188	3277	2968	1752
AT-350SR	S5	1602	968	2172	1538	3312	2678									1930	1180
	S6	1340	592	1915	1162	3065	2302	4205	3442							2316	1416
	S7	1085	213	1655	783	2796	1926	3936	3066	5076	4206					2702	1652
	S8			1392	408	2532	1550	3675	2692	4815	3832	5955	4972			3088	1888
	S9					2275	1170	3401	2312	4556	3455	5696	4595	6836	5735	3474	2124
	S10					1995	791	3154	1935	4296	3075	5442	4220	6582	5362	3860	2360
	S11							2895	1556	4029	2697	5178	3840	6322	4984	4246	2596
	S12									3775	2318	4915	3465	6062	4605	4632	2832
AT-400SR	S5	2792	1758	3715	2681	5560	4526									2853	1819
	S6	2428	1187	3351	2110	5196	3955	7041	5800							3424	2182
	S7	2064	616	2987	1539	4832	3384	6677	5229	8522	7074					3995	2546
	S8			2623	968	4468	2813	6313	4658	8158	6503	10003	8348			4565	2910
	S9					4104	2242	5949	4087	7794	5932	9639	7777	11484	9622	5136	3274
	S10					3741	1671	5585	3516	7430	5361	9275	7206	11120	9051	5707	3638
	S11							5221	2945	7066	4790	8911	6635	10756	8480	6278	4001
	S12									6702	4219	8547	6064	10392	7909	6848	4365

选型-选色
SELECTION COLOR

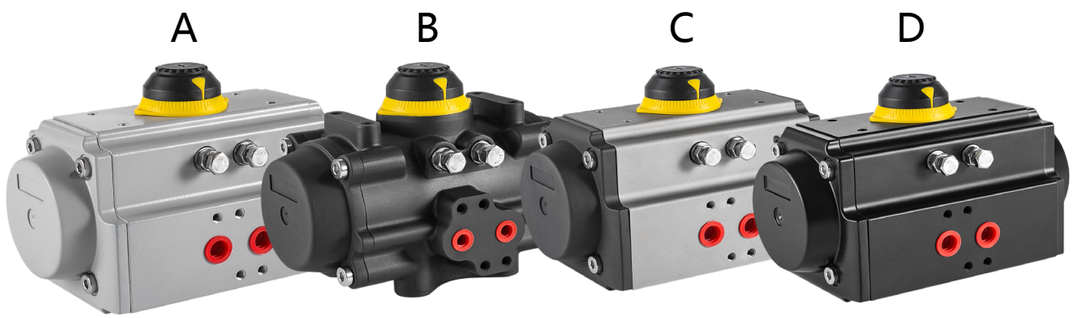

Different colors powder polyester painted and treatment body and ends available

不同的喷塑颜色
不同的缸体及端盖表面处理



The featured color
black hard anodizing tube color

主推颜色
黑色缸体阳极硬质氧化

选型规格
SELECTION MODEL

+订购代码
ORDER CODE

ATY + BORE + DA + C

SERIES 系列	BORE 缸径	TYPE 类型 (DA)	C 颜色
ATY	52-63	DOUBLE ACTING 双作用	A-B-C-D

压铸铝 ATY - DIE CASTING ALUMINUM

Sizing:Double Acting Actuator
The suggested safety factor for double acting actuators under normal working conditions is 20%-30%
Example：
• The torque needed by valve=100Nm
• The torque considered safety factor (1+30%)=130Nm
• Air supply=5Bar
According to the above table,we can choose the minimum model is ATY-105DA

AT + BORE + DA + C

SERIES 系列	BORE 缸径	TYPE 类型 (DA)	C 颜色
AT	52-400	DOUBLE ACTING 双作用	A-B-C-D

型材铝 AT - EXTRUDED ALUMINUM

双作用执行器的选型：
在正常操作条件下，双作用执行器
考虑的安全系数为 20%-30%
示例：
• 阀门力矩 =100Nm
• 安全力矩 =100 x（1+30%）=130Nm
• 气源压力 =5Bar
对照双作用力矩表，选配双作用执行器
最小规格为 ATY-105DA

+订购代码
ORDER CODE

ATY + BORE + SR + X + C

SERIES 系列	BORE 缸径	TYPE 类型 (SR)	X 弹簧数量	C 颜色
ATY	52-63	SPRING RETURN 单作用	5-12	A-B-C-D

压铸铝 ATY - DIE CASTING ALUMINUM

Sizing:Spring Return Actuators
The suggested safety factor for spring return actuator under normal working conditions is 30%-50%
Example：
• The torque needed by valve=80N.m
• The torque consider safety factor (1+30%)=104N.m
• Air supply=5Bar
According to the table of spring return actuator's output,we find output torque of SR140 S7 is:
• Air stroke 0°=308N.m
• Air stroke 90°=247N.m
• Spring stroke 90°=181N.m
• Spring stroke 0°=120N.m
All the output torque is larger than we needed.

AT + BORE + SR + X + C

SERIES 系列	BORE 缸径	TYPE 类型 (SR)	X 弹簧数量	C 颜色
AT	52-400	SPRING RETURN 单作用	5-12	A-B-C-D

型材铝 AT - EXTRUDED ALUMINUM

单作用执行器的选型：
在正常操作条件下，单作用执行器
考虑的安全系数为 30%-50%
示例：
• 阀门力矩 =80Nm
• 安全力矩 =80 x（1+30%）=104Nm
• 气源压力 =5Bar
对照单作用执行器输出力矩表，可查到 SR140 S7 输出力矩为
• 空气行程 0°=308N.m
• 空气行程 90°=247N.m
• 弹簧行程 90°=181N.m
• 弹簧行程 0°=120N.m
所有输出力矩均大于我们需求

+型号TYPE
ATY

安装尺寸 DIMENSIONS

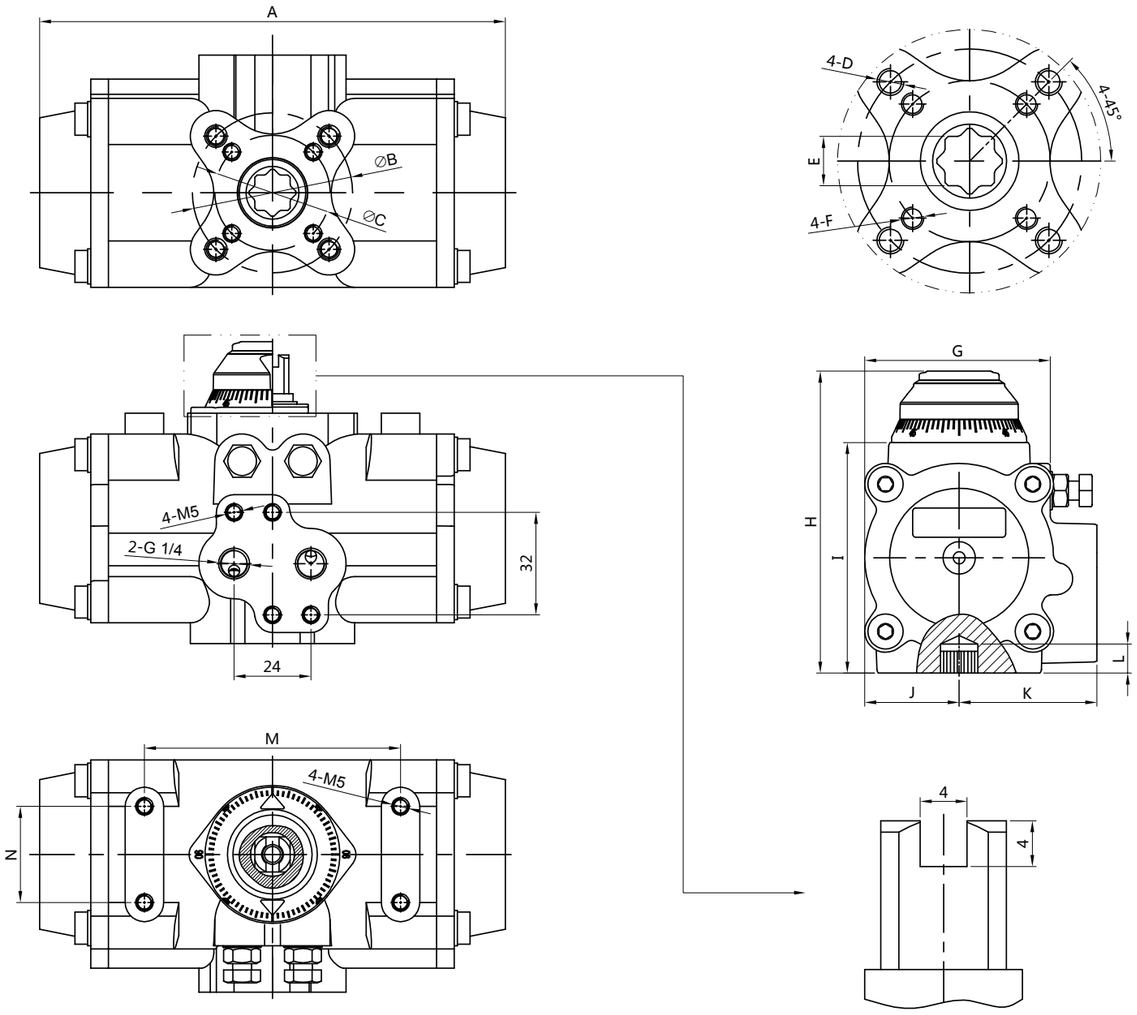

Φ [MM]	A	ΦB	ΦC	D	E	F	G	H	I	J	K	L	M	N
ATY-52	145.5	50	36	M6	11	M5	58	94	72	29.5	43	13	80	30
ATY-63	153.5	70	50	M8	14	M6	66.5	110	88	35	48.5	16	80	30

+型号TYPE
AT

安装尺寸 DIMENSIONS

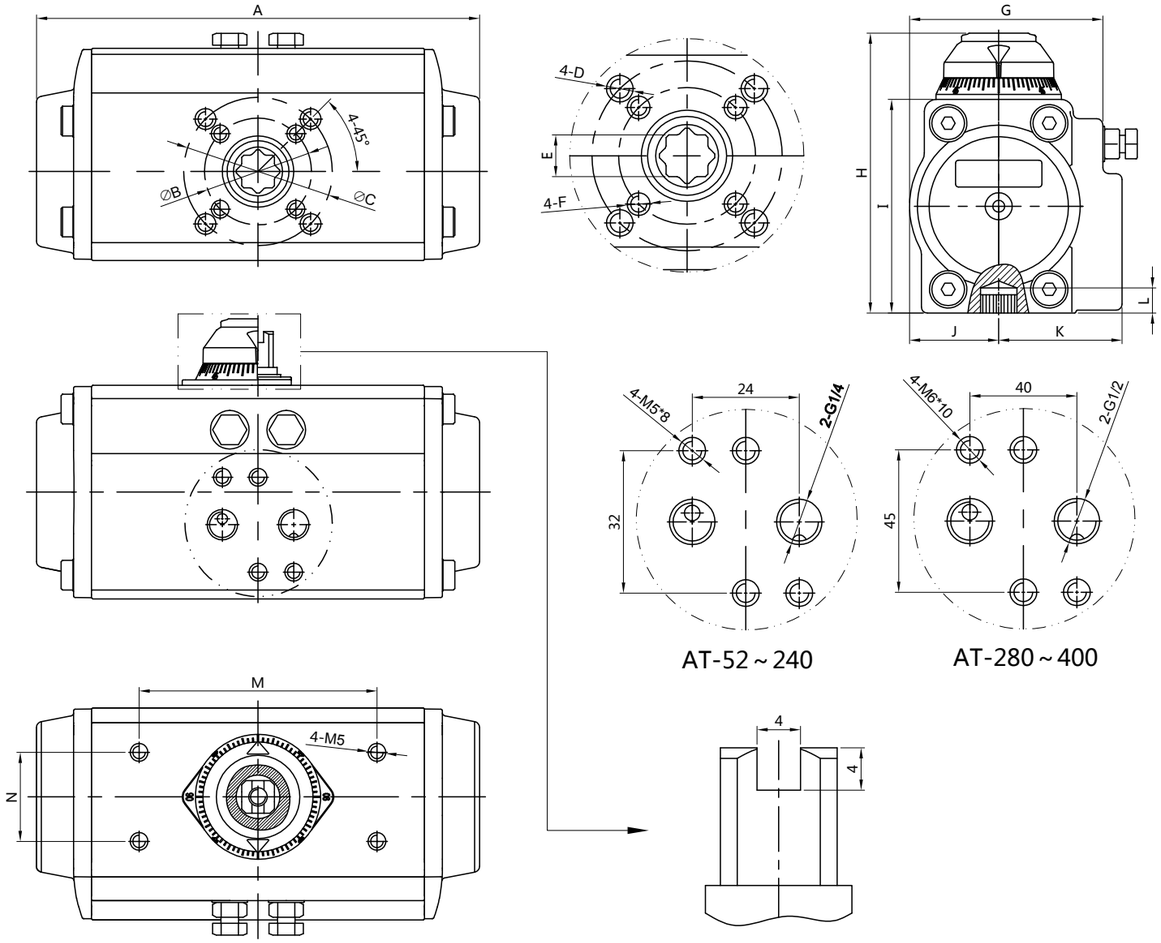

Φ [MM]	A	ΦB	ΦC	D	E	F	G	H	I	J	K	L	M	N
AT-52	149	36	50	M6*10	11	M5*8	65	94.5	72	30	41.5	13	80	30
AT-63	162	50	70	M8*13	14	M6*10	72	110	87.5	36	47	18	80	30
AT-75	184	50	70	M8*13	14	M6*10	81	119.5	99.5	42	53	18	80	30
AT-83	204	50	70	M8*13	17	M6*10	88	128.8	108.8	46	57	21	80	30
AT-92	262	50	70	M8*13	17	M6*10	98	136.5	116.5	50	61	21	80	30
AT-105	268	70	102	M10*16	22	M8*13	109.5	153	133	57.5	64	26	80	30
AT-125	301	70	102	M10*16	22	M8*13	127.5	175	155	67.5	74.5	26	80	30
AT-140	390	102	125	M12*20	27	M10*16	137.5	192	172	75	77	31	130	30
AT-160	458	102	125	M12*20	27	M10*16	158	217	197	87	87	31	130	30
AT-190	525	140	140	M16*22	36	M16*22	189	260	230	103	103	36	130	30
AT-210	532	140	140	M16*22	36	M16*22	211	285	255	114	114	36	130	30
AT-240	610	165			46	M20*25	242	342	305	129	133	50	130	30
AT-270	670	165			46	M20*25	273	364	327	142	156	50	130	30
AT-300	752	165			55	M20*25	312	380	345	162	173	60	130	30
AT-350	880	165	254	M16*25	50	M20*25	362	440	410	190	195	60	130	30
AT-400	950	165	254	M16*25	55	M20*28	450	506	466	260	260		130	30

+气动执行器&球阀
BALL VALVE

零件材质
MATERIAL



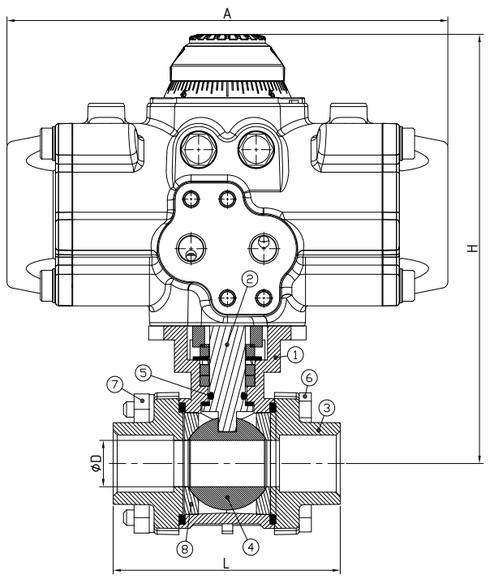

应用规范 Application Norm
公称压力: 1.6-6.4MPa
适用温度范围: -25℃ +200℃
适用介质: 水、油、气及某些腐蚀性液体（W.O.G）
螺纹类型: G・NPT . BSP . DIN259 / 299

Working Pressure : 1000PSI
Temperature Range:
-25℃ +200℃
Suitable medium : Water 、Oil、
air and some corrosive liqid
Thread type :
G・NPT . BSP . DIN259 / 299

NO.	Part Name 零件名称	Material 材质	
1	Body 阀体	CF8M 不锈钢	WCB 碳钢
2	Stem 阀杆	SS316 不锈钢	SS304 不锈钢
3	Cap 阀盖	CF8M 不锈钢	WCB 碳钢
4	Ball 球体	SS316 不锈钢	SS304 不锈钢
5	O Ring O型圈	VITON 橡胶	VITON 橡胶
6	Bolt 螺栓	SS304 不锈钢	B8
7	Nut 螺母	SS304 不锈钢	FCD45
8	Ball Seat 球座	R-PTFE（15%）	R-PTFE（15%）
9	Washer 垫圈	SS304 不锈钢	FCD45
10	Stem packing 填料	PTFE 聚四氟乙烯	PTFE 聚四氟乙烯
11	Thrust washer 止推垫圈	PTFE 聚四氟乙烯	PTFE 聚四氟乙烯
12	Stem packing 填料	PTFE 聚四氟乙烯	PTFE 聚四氟乙烯

SIZE	1/4"	3/8"	1/2"	3/4"	1"	1 1/4"	1 1/2"	2"	2 1/2"	3"	4"
MODEL	ATY52	ATY52	ATY52	ATY52	ATY52	ATY63	ATY63	ATY75	ATY83	ATY105	ATY125
D	11.6	12.7	15	20	25	32	40				
L	68	68	75	80	90	108	120				
A	145.5	145.5	145.5	145.5	145.5	153.5	153.5				
H	139	139	139	140	151	157	165				

+气动执行器&球阀
BALL VALVE

零件材质
MATERIAL



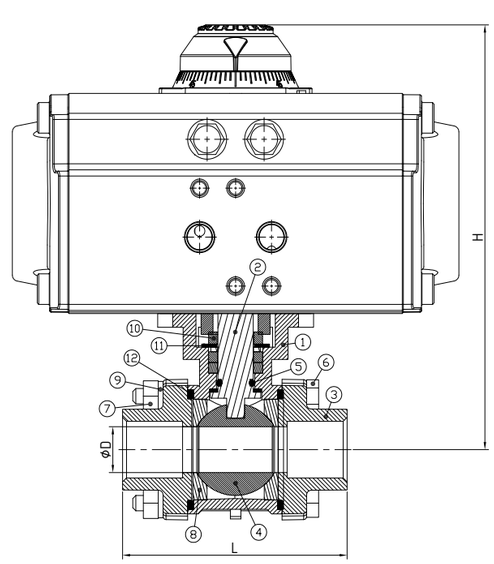

应用规范 Application Norm
公称压力: 1.6-6.4MPa
适用温度范围: -25℃ +200℃
适用介质: 水、油、气及某些腐蚀性液体（W.O.G）
螺纹类型: G・NPT . BSP . DIN259 / 299

Working Pressure : 1000PSI
Temperature Range:
-25℃ +200℃
Suitable medium : Water 、Oil、
air and some corrosive liqid
Thread type :
G・NPT . BSP . DIN259 / 299

NO.	Part Name 零件名称	Material 材质	
1	Body 阀体	CF8M 不锈钢	WCB 碳钢
2	Stem 阀杆	SS316 不锈钢	SS304 不锈钢
3	Cap 阀盖	CF8M 不锈钢	WCB 碳钢
4	Ball 球体	SS316 不锈钢	SS304 不锈钢
5	O Ring O型圈	VITON 橡胶	VITON 橡胶
6	Bolt 螺栓	SS304 不锈钢	B8
7	Nut 螺母	SS304 不锈钢	FCD45
8	Ball Seat 球座	R-PTFE（15%）	R-PTFE（15%）
9	Washer 垫圈	SS304 不锈钢	FCD45
10	Stem packing 填料	PTFE 聚四氟乙烯	PTFE 聚四氟乙烯
11	Thrust washer 止推垫圈	PTFE 聚四氟乙烯	PTFE 聚四氟乙烯
12	Stem packing 填料	PTFE 聚四氟乙烯	PTFE 聚四氟乙烯

SIZE	1/4"	3/8"	1/2"	3/4"	1"	1 1/4"	1 1/2"	2"	2 1/2"	3"	4"
MODEL	AT52	AT52	AT52	AT52	AT52	AT63	AT63	AT75	AT83	AT105	AT125
D	11.6	12.7	15	20	25	32	40	50	65	80	100
L	68	68	75	80	90	108	120	141	165	188	256
A	149	149	149	149	149	162	162	184	204	268	301
H	139	139	139	140	151	173	181	202	229	264	309



WE ONLY DO HIGH QUALITY ITEMS

Everything we carry out is according to our ISO 9001:2015 quality management system. We take quality control at every stage as our top priority. We pay attention to the management of the product process so as to make our products conform to customers' requirements. We satisfy customers' expectation by improving continuously.

+OUR SERVICES FOR YOU

We mainly can provide OEM services for our customers according to their specific requirements.

At Bangye we pride ourselves on being an industry superior supplier of die casting and injection mold, high integrity aluminum and zinc alloy die casting and precision machined components. Besides, in order to better understand the products, we also have self-owned pneumatic products such as cylinders, valves and FRL to satisfy customers' demands.

MOLD MAKING

Being able to design and produce aluminum and zinc alloy die casting mold,plastic injection mold and gravity casting mold.

DIE CASTING

Owning 10 sets of high pressure cold chamber die casting machines.All the die casting machines are with automatic feeders, spraying systems,fetch robot arms.
The alloy can be aluminum or zinc.

CNC MACHINING

OEM CNC Machining.Secondary machining such as tapping, milling, boring, turning, drilling and threading are performed according to your specifications.

ASSEMBLING

Making product assemblies and workshop pre-assembling is an integrated part of our services.Assisting customers to make and purchase other parts.

SURFACE TREATMENT

Cleaning,Impregnation,Shot Blasting, Anodization, Cataphoresis,Coating,Surface Painting



地址: **中国上海金山工业区揽工路**389**号**

Add: N0.389 Langong Road, Jinshan
Industrial Zone, Shanghai, China

Tel: 0086-021-67276363

Fax: 0086-021-67277272

Web: www.sh-bangye.com

Email: info@sh-bangye.net