RAY-MOTION®
dedicated to motion
www.ray-motion.com

TOTALLY DIGITAL 2D GALVANOMETER SYSTEM

Atom-10



Atom Series

Totally digital 2D galvanometer system. Embedded control system guaranteed the servo loop operation. It is compact, stable and cost-efficiency. It is the basic version of Ray-Motion product lines. Mirrors of general wavelength is available, like 1064nm, 532nm 355nm, 10.6um.Suitable for laser marking, microscope, drilling, trimming and cutting etc.

亚腾系列

全数字的二维扫描振镜系统，基于嵌入式控制台，使用先进的控制算法实现振镜马达的高速、高精度运行。产品结构紧凑、质量稳定可靠、性价比高。作为鞍山精准公司的入门级产品，非常适合一般要求的激光应用场合，例如激光打标、激光切割、激光蚀刻等领域。

鞍山精准光学扫描技术有限公司
Anshan Precision OpticalScanning Technology CO.,Ltd
TEL:86-412-5297375 FAX:86-412-5297370

辽宁省鞍山市高新区激光产业园南园2#楼
2#Building,Laser Industrial Park(South),
High-tech Industrial Development Zone,AnShan

Atom Specifications
亚腾 规格参数

所有角度均为光学角/All angles are in optical degrees

输入光束孔径 Aperture	10mm
光束偏移 Beam displacement	13mm
追踪时间 Tracking error time	220us
零点漂移 Offset drift	50urad/K
增益漂移 Gain drift	75ppm/K
阶跃响应时间 Step response time	
1%全范围响应时间 1% of full scale	0.3ms
10%全范围响应时间 10% of full scale	0.8ms
标记速度 Marking speed (1)	2m/s
定位速度 Positioning speed	12m/s
书写速度 Writting speed (2)	
Good quality	500cps
High quality	450cps

可重复性 Repeatability	< 22urad
8小时以上长期漂移 Drift over 8 hours 环境温度恒定且接有水冷系统 After 30min warm-up and with water cooling	< 0.3mrad
标准扫描角度 Typical scan angle	40 degrees
接口协议 Interface	XY2-100
工作环境温度 Operating temperature	25±10℃
额定电源容量 Power requirements	±15V DC, 150W, RMS max 3A
驱动方式 Driver mode	Digital
位置分辨率 Resolution	16Bit
最大激光功率 Max laser power (3)	250W

1. with F-Theta objective, f=160mm
2. single-stroke characters of 1mm height
3. The mirror of 1064nm can stand max laser power

上述资料如有更改，将不作另行通知 The above information is subject to change without notice 11/2024

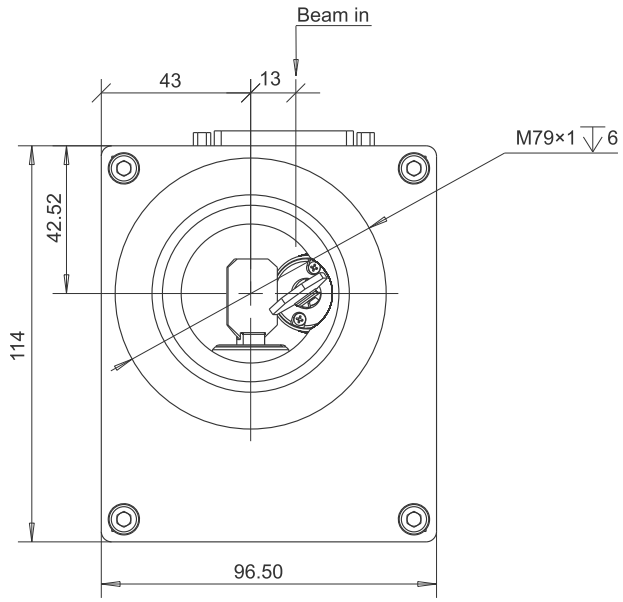

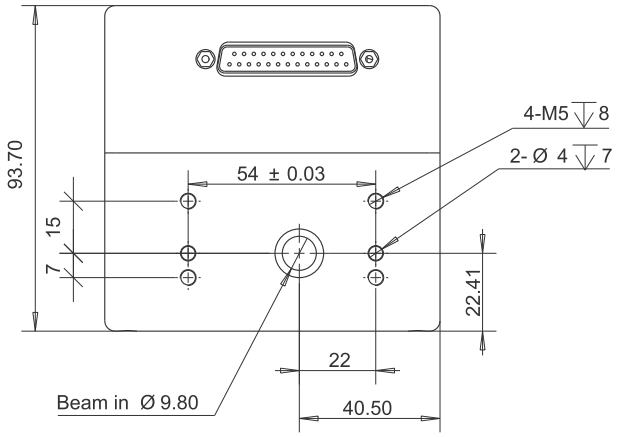

鞍山精准光学扫描技术有限公司
Anshan Precision OpticalScanning Technology CO.,Ltd
TEL:86-412-5297375 FAX:86-412-5297370

辽宁省鞍山市高新区激光产业园南园2#楼
2#Building,Laser Industrial Park(South),
High-tech Industrial Development Zone,AnShan