RAY-MOTION
dedicated to motion
www.ray-motion.com

HIGH POWER PRE-SCANNING STSTEM

# NPRF-30



## Key Feature

Optimized structure for largest common work area
High integration with high dustproof level
Increase productivity several times by multi-head
Electrically adjustable working area
Neutron series galvo in the system provide the highest precision
Optional coaxial quality inspection interface

The NPRF-30 galvanometer is a 3D laser scanning system specially designed for the metal 3D printing industry. It includes a Neutron 2D galvanometer and a large aperture optical Z-axis. The maximum operating power can reach 1KW, and the optimized structure can maximize the common area range for multi-head applications. The reserved expansion interface can meet theneeds of coaxial measurement.

## 主要特点

优化的结构，可实现最大的公共工作区
高集成度，高防尘等级
通过多机头提高生产力数倍
电动调节工作区域
系统中的凌腾系列振镜提供最高的精度
可选的同轴质量检测接口

NPRF-30振镜是专门为金属3D打印行业设计的3D激光扫描系统。它包括一个Neutron 2D振镜和一个大孔径的光学Z轴。最大工作功率可以达到1KW，优化的结构可以最大限度地扩大多头应用的公共区域范围。预留的扩展接口可以满足同轴测量的需要。

鞍山精准光学扫描技术有限公司
Anshan Precision OpticalScanning Technology CO.,Ltd
TEL:86-412-5297375 FAX:86-412-5297370

辽宁省鞍山市高新区激光产业园南园2#楼
2#Building,Laser Industrial Park(South),
High-tech Industrial Development Zone,AnShan

RAY-MOTION
dedicated to motion
www.ray-motion.com

# NPRF -30High Power Pre-scanning System

## NPRF-30高功率前聚焦扫描振镜系统

### 典型的光学配置 /Typical optical configurations

| 工作区域尺寸[mm²] Image field size [mm²] | 460 x 460 | 560 x 560 | 660 x 660 |
|---|---|---|---|
| 2*2 配置下最大公共区域<br>100% overlap per image field [mm²]2x2 scanner | 307 x 315 | 407 x 415 | 507 x 515 |
| 工作距离（从振镜下边缘起）[mm]<br>Free working distance from lower edge of scan system [mm] | 585 | 722 | 860 |
| 瑞利长度[mm] Rayleigh length[mm] | 1.4 | 2.0 | 2.6 |
| 平均焦点直径[μm]<br>Average focus diameter in the image field[μm] | 72 | 83 | 94 |

### 一般规格 /General specifications

| | |
|---|---|
| 孔径 Aperture | 30 mm |
| 波长 Wavelength | 1030-1080 nm |
| 最大激光功率 Max.laser power | 1KW |
| 电源电压（要求） Supply Voltage(Requirements) | |
| 振镜 /Galvo Scanner | ±15 @ 150W |
| DFU电动调节模组<br>/DFU Electric adjustment module power supply interface | 12-48V 6A |
| 尺寸（长，宽，高）<br>Dimensions(LxWxHinmm) | 230x153x323 |
| 接口协议 Interface | XY2-100 |
| 水冷规格 Water cooling | 2-4 l/min @2-3 bar |
| 防护等级 IP code | IP 55 |
| 重量 Weight | approx. 14kg |

### 精度和稳定性 /Precision&stability

| | |
|---|---|
| 重复性 Repeatability(RMS) | <2 μrad |
| 分辨率 Position resolution | 16 Bit |
| 线性度 Nonlinearity | 99.9 % |
| 温度漂移 Temperature drift | |
| 零点 /Offset | <15 μrad/K |
| 增益 /Gain | <8 ppm |
| 长期漂移 Long-term drift | |
| 8小时漂移（30分钟后） 8-hr drift(after30min) | |
| 零点 /Offset | < 50 μrad |
| 增益 /Gain | < 50 ppm |

### 动态性 /Dynamics

| | |
|---|---|
| 加工速度 Process speed | 6 m/s |
| 阶梯响应 Step Response | |
| 1%满刻度 /1%full scale | 1 ms |
| 10%满刻度 /10%full scale | 6 ms |
| 追踪误差 Z-轴<br>Tracking Error Z-axis | <1.5 ms |
| 追踪误差XY模块<br>Tracking Error XY sub-module | <680us |

上述资料如有更改，将不作另行通知 The above information is subject to change without notice

鞍山精准光学扫描技术有限公司
Anshan Precision OpticalScanning Technology CO.,Ltd
TEL:86-412-5297375 FAX:86-412-5297370

辽宁省鞍山市高新区激光产业园南园2#楼
2#Building,Laser Industrial Park(South),
High-tech Industrial Development Zone,AnShan

# NPRF -30High Power Pre-scanning System

## NPRF-30高功率前聚焦扫描振镜系统

安装尺寸图 /Installation Dimension Drawing(MM)

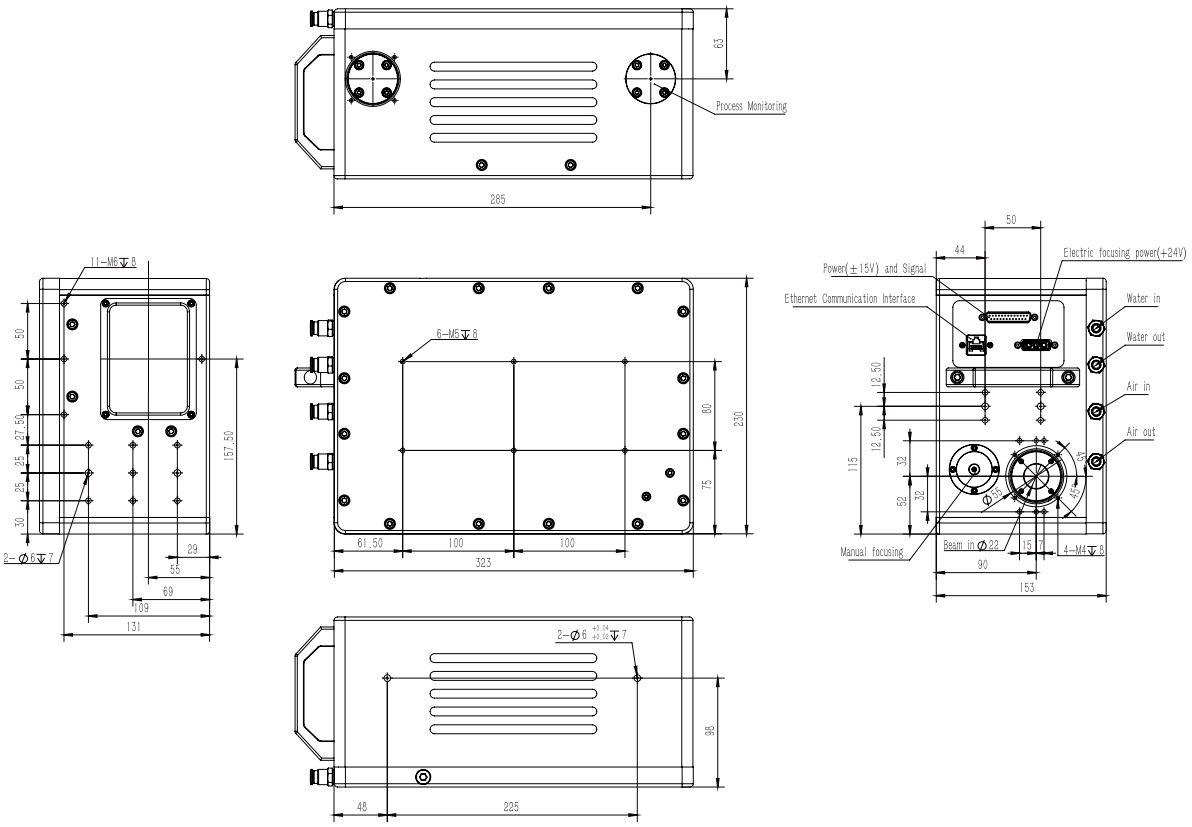


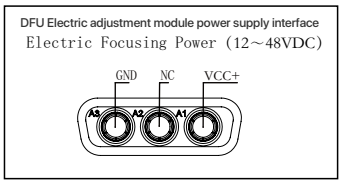


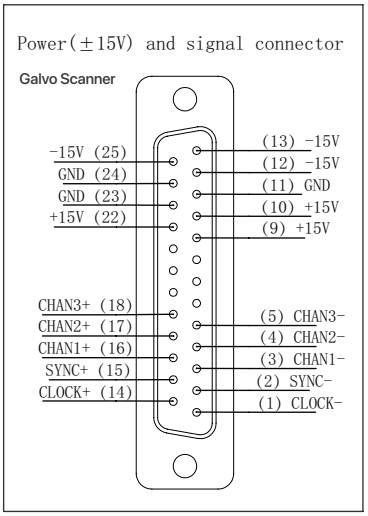


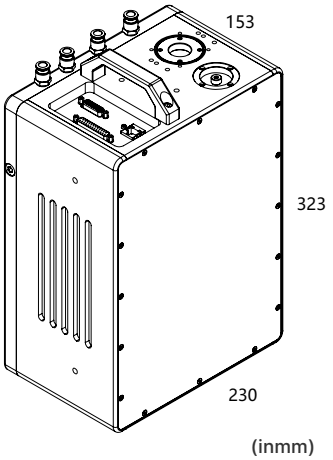


(inmm)


鞍山精准光学扫描技术有限公司
Anshan Precision OpticalScanning Technology CO.,Ltd
TEL:86-412-5297375 FAX:86-412-5297370

辽宁省鞍山市高新区激光产业园南园2#楼
2#Building,Laser Industrial Park(South),
High-tech Industrial Development Zone,AnShan

# NPRF -30High Power Pre-scanning System

## NPRF-30高功率前聚焦扫描振镜系统

### 扫描区域示意图 /Scanning area diagram

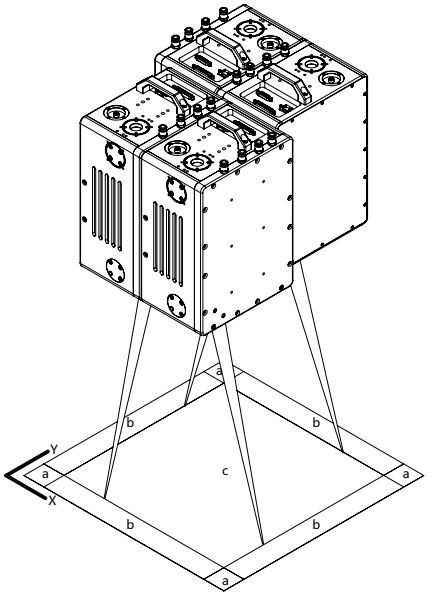


| | Overlap of the image fields |
|---|---|
| a | 1X |
| b | 2X |
| c | 4X |

### 结构示意图 /Structure schematic

1. 光纤适配器（不包含）
2. 保护窗
3. 发散透镜
4. 聚焦光学镜
5. 用于过程监控的连接端口
6. 反射镜
7. 电流计扫描器振镜
8. 保护窗口镜
9. 冷却空气接口
10. 冷却水接口

1. **Fiber adapter ( not include )**
2. **Protective window**
3. **Diverging lens**
4. **Focusing optic**
5. **Connection for process monitoring**
6. **Tilted mirror**
7. **Galvanometer scanner**
8. **Protective window**
9. **Cooling air connections**
10. **Cooling water connections**

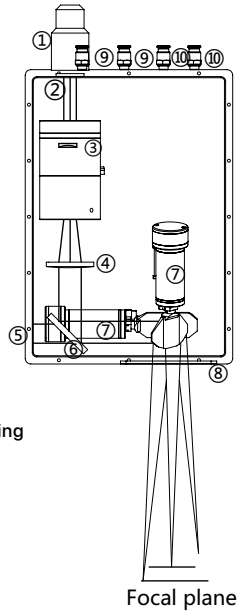


上述资料如有更改，将不作另行通知 The above information is subject to change without notice 2024/12/20


鞍山精准光学扫描技术有限公司
Anshan Precision OpticalScanning Technology CO.,Ltd
TEL:86-412-5297375 FAX:86-412-5297370

辽宁省鞍山市高新区激光产业园南园2#楼
2#Building,Laser Industrial Park(South),
High-tech Industrial Development Zone,AnShan