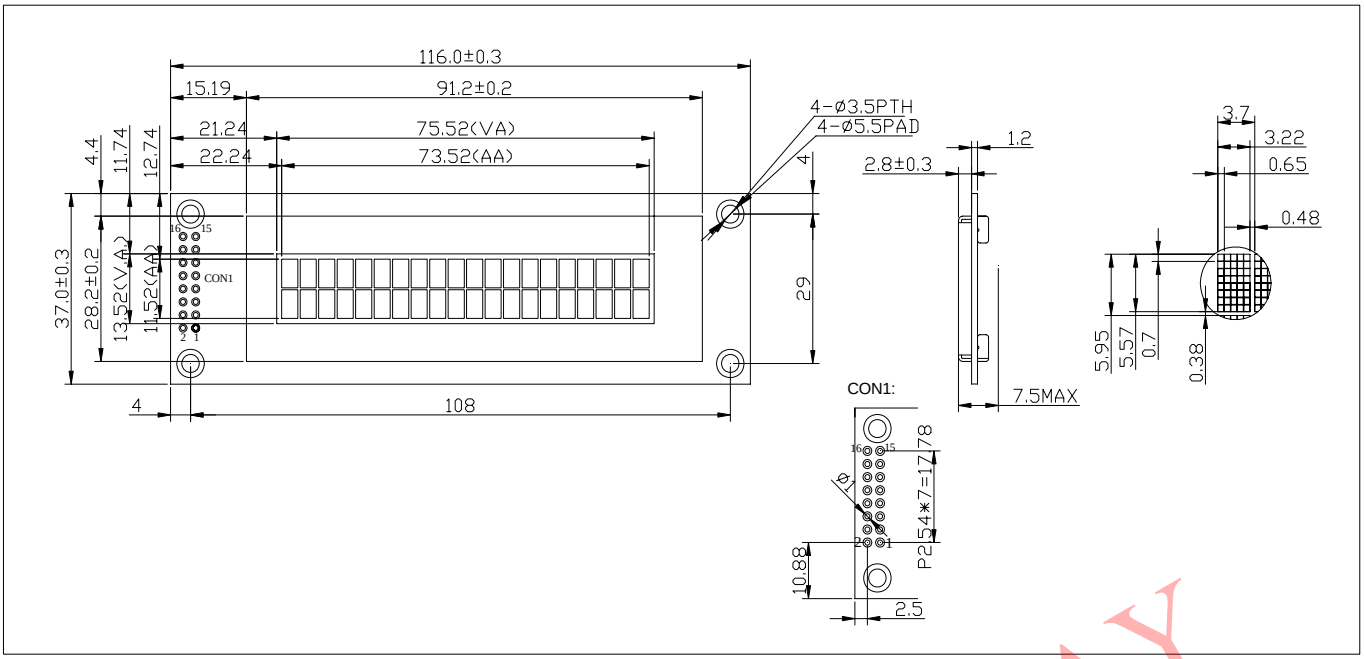

PIN CONNECTIONS

Pin	Symbol	Level	Function
1	VSS	0V	GND
2	VDD	5V	Power Supply for logic
3	NC	-	No connection
4	D/C	H/L	H: Data L: Instruction code
5	R/W	H/L	H: Read L: Write
6	E	L	Chip Enable signal
7~14	DB0 ~ DB7	H/L	Data bus line
15~16	NC	-	No connection

NOTES:

1. controller compatible with KS0066
2. 3.3V/5V power supply optional
3. Parallel(4-/8-bit 6800/8080) /
   Serial(3-/4-wire SPI/I^2C) interface optional
4. Display color :White

MECHANICAL DATA

Item	Nominal Dimensions	Unit
Module Size（W x H x T）	116.0X37.0X7.5	mm
Viewing Area (W x H)	75.52(W)×13.52(H)	mm
Character Size(W x H)	3.22×5.57	mm
Dot Pitch (W x H)	0.654×0.703	mm

ABSOLUTE MAXIMUM RATINGS

Item	Symbol	Min.	Max.	Unit
Supply Voltage (Logic)	V_{DD}-V_{SS}	0	5.6	V
Input Voltage	V_I	0	V_{DD}	V
Operating Temp.	$T_{OPR.}$	-40	+80	℃
Storage Temp.	$T_{STG.}$	-40	+80	℃

ELECTRICAL CHARACTERISTICS (V_{DD}=5.0V, Ta=25℃)

Item	Symbol	Min.	Typ.	Max.	Unit
Input High Voltage	V_{IH}	0.7V_{DD}	-	V_{DD}	V
Input Low Voltage	V_{IL}	0	-	0.3V_{DD}	V
Output High Voltage	V_{OH}	0.7V_{DD}	-	V_{DD}	V
Output Low Voltage	V_{OL}	0	-	0.3V_{DD}	V
Supply Current (Note)	I_{DD}	-	42	-	mA

*Note:VDD=5.0V, 50% Display Area Turn On .

TSINGTEK DISPLAY