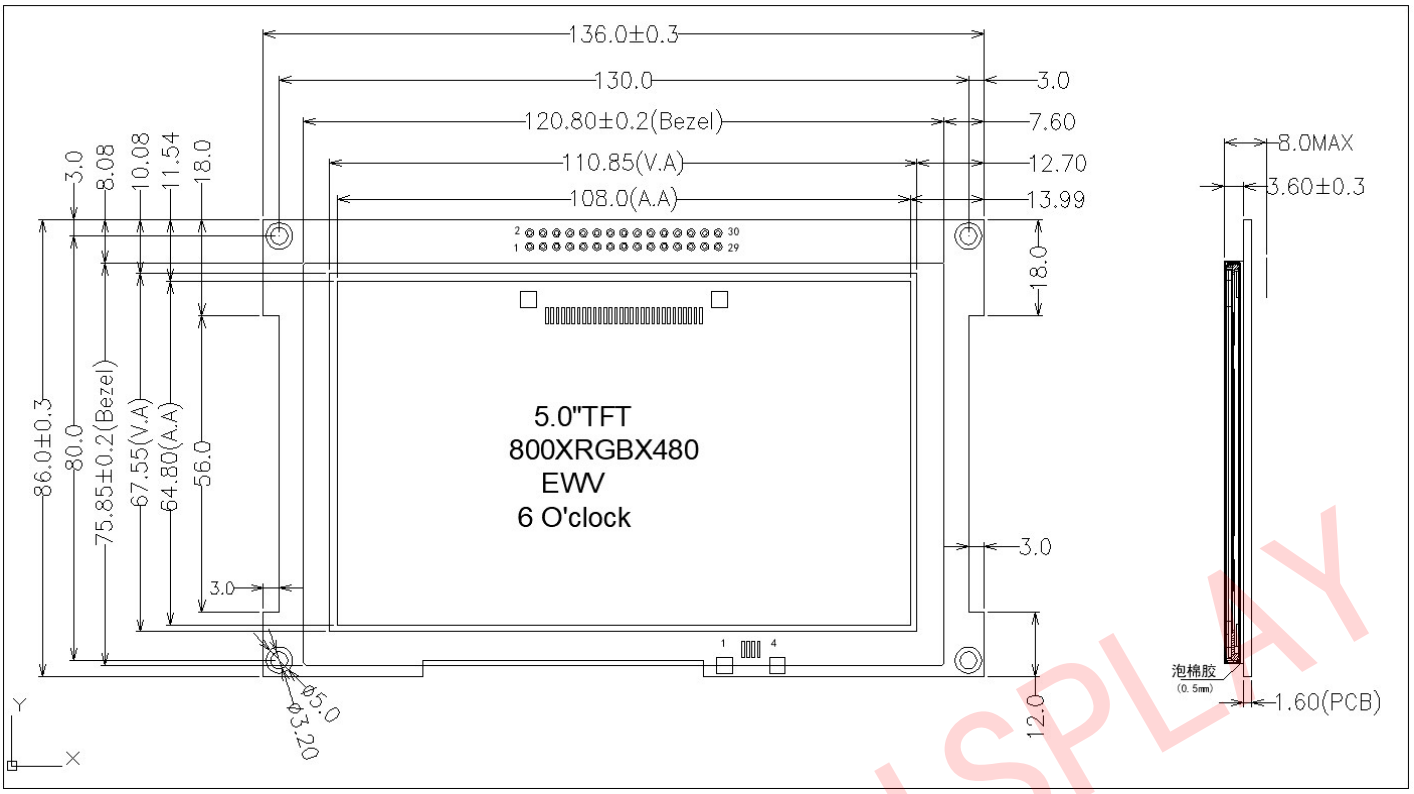

PIN CONNECTIONS

Pin	Syb	Level	Function
1~2	Vss	0V	Ground
3~4	Vdd	+5V	Power supply for Logic
5	/REST	H/L	Reset signal ,active “L”
6	/CS	H/L	Chip select signal,active “L”
7	/RD	H/L	Read signal
8	/WR	H/L	Write signal
9	RS	H/L	Data/Command select
10 ~ 25	DB0 ~ DB15	H/L	Data bus
26	/WAIT	H/L	Wait signal
27	/INT	H/L	Interrupt signal
28	LEDC	H/L	Backlight control signal
29 ~30	NC	-	No connection
Touch panel control interface			
1	XL	H/L	TP left signal
2	YD	H/L	TP down signal
3	XR	H/L	TP right signal
4	YU	H/L	TP up signal

MECHANICAL DATA

Item	Nominal Dimensions	Unit
Module Size（W x H x T）	136.0X86.0X8.0(MAX)	mm
Viewing Area (W x H)	110.85X67.55	mm
Dot Pitch (W x H)	0.135X0.135	mm

ABSOLUTE MAXIMUM RATINGS

Item	Symbol	Min.	Max.	Unit
Supply Voltage (Logic)	V_{DD}-V_{SS}	0	5.5	V
Input Voltage	V_I	0	V_{DD}	V
Operating Temp.	T_{OPR}	-20	+70	℃
Storage Temp.	T_{STG}	-30	+80	℃

ELECTRICAL CHARACTERISTICS (V_{DD}=5.0V, Ta=25℃)

Item	Symbol	Min.	Typ.	Max.	Unit
Input High Voltage	V_{IH}	0.7 V_{DD}	--	V_{DD}	V
Input Low Voltage	V_{IL}	0	--	0.3V_{DD}	V
Output High Voltage	V_{OH}	0.8 V_{DD}	--	V_{DD}	V
Output Low Voltage	V_{OL}	-	--	0.2V_{DD}	V
Supply Current	I_{DD}	-	TBD	-	mA

NOTES: 1. Size: 5.0 inch TFT 800(RGB)X480 256/64K color

2. Built-in RA8875 controller
3. Built-in GB code 4. 16-bit 8080 Interface
5. Power supply for logic voltage 5V/3.3V optional, IO voltage 3.3V
6. Touch panel optional
7. PWM control LED Backlight (White)

TSINGTEK DISPLAY