深圳市鸿之森电子有限公司

产 品 规 格 书

Specification for approval

产品名称/The product name: **1209 红绿双色**

产品型号/Product model: **HS-1209-RG**

编　　号/Make no:

版 本 号/Version: A0

日　　期/Date: 2021-12-16

签核/Signed			
制定 Formulate	审核 Audit	品质部 QC	批准 Approve
TaoYuan	Chen Qiang	Feng Jun	Li Tao

一、产品描述/Features

- 外观尺寸/Package(L/W/H) : 3.2×2.7×0.8mm
- 颜色/Color: 红光、绿光/Red、Green
- 胶体/Lens: 无色透明/Water Clear
- EIA规范标准包装/EIA STD Package
- 环保产品，符合ROHS要求/Meet ROHS, Green Product
- 适用于自动贴片机/Compatible With SMT Automatic Equipment
- 适用于红外线回流焊制程/Compatible With Infrared Reflow Solder Process

二、外形尺寸及建议焊盘尺寸/Package Profile & Soldering PAD Suggested

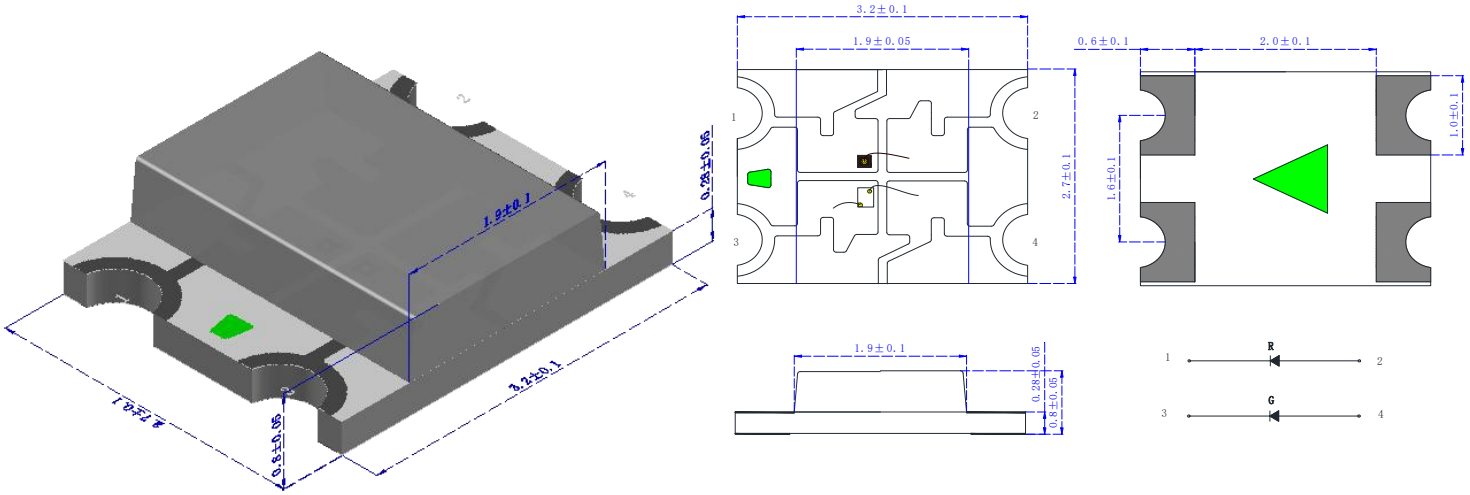

注/Notes: 1. 单位 ： 毫米（mm）/All dimensions are in millimeters.

2. 公差 ： 如无特别标注则为± 0.1 mm/Tolerance is ± 0.10 mm unless otherwise noted.

三、建议焊接温度曲线/Soldering Profile Suggested

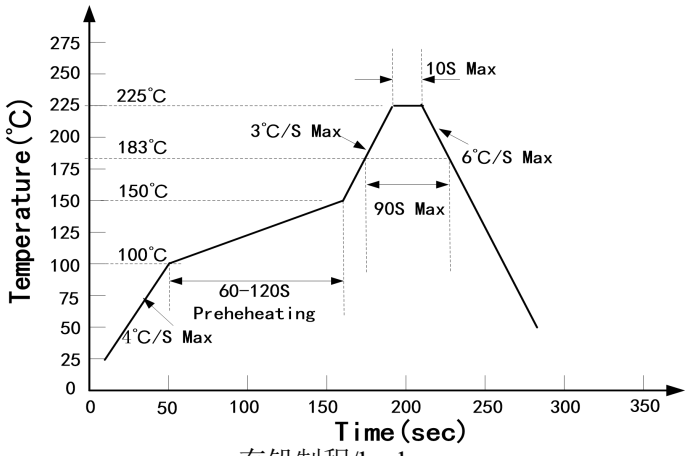

有铅制程/lead

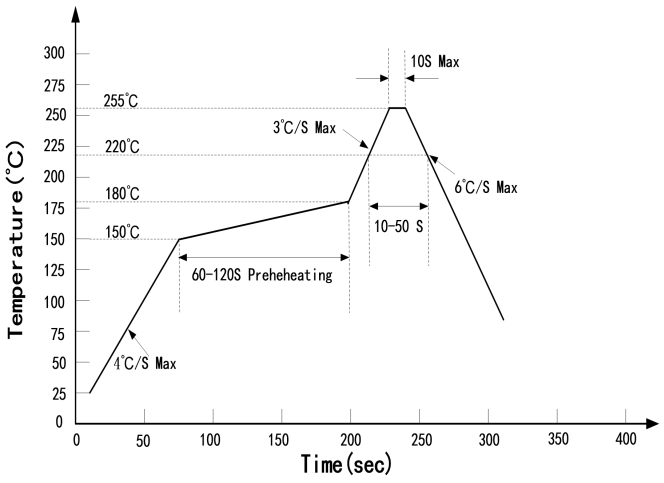

无铅制程/lead-free

四、光电参数/Photoelectric parameters （Ta=25℃）

最大绝对额定值/Absolute Maximum Ratings （Ta=25℃）				
参数/Parameter	符号 Symbol	数据/Data		单位 Unit
		红光 Red	绿光 Green	
消耗功率/Power Dissipation	PD	60	75	MW
最大脉冲电流/Peak Forward Current(1/10 占空比, 0.1ms 脉宽)	IFP	60	60	mA
正向直流工作电流/DC Forward Current	IF	20	20	mA
反向电压/Backward Voltage	VR	9		V
存储环境温度/Storage Temperature Range	Tstg	25℃±5℃		
工作环境温度/Operating Temperature Range	Topr	25℃±5℃		
焊接条件/Soldering Condition	Tsol	回流焊/Reflow soldering : 255°，10s max		
		手动焊/Hand soldering : 300°C ，3s max		

参数/Parameter	符号 Symbol	颜色 Color	数据/Data			单位 Symbol	测试条件 Test Condition
			最小值 Min	平均 Average	最大值 Max		
正向电压 Forward Voltage	Vf	R	1.8	---	2.1	V	IF=5mA
		G	2.6	---	3.0	V	IF=5mA
光强 Light Intensity	Iv	R	35	---	50	mcd	IF=5mA
		G	160	---	310	mcd	IF=5mA
主波长 The main wavelength	λd	R	615	---	619	(nm)	IF=5mA
		G	518	---	530	(nm)	IF=5mA
峰值波长 The peak wavelength	λp	R	---	618	---	(nm)	IF=5mA
		G	---	520	---	(nm)	IF=5mA
半波宽 Spectral Line Half-Width	Δλ	R	---	28	---	(nm)	IF=5mA
		G	---	28	---	(nm)	IF=5mA
反向电流 Reverse current	Ir		---	---	10	μA	Vr=9V
半光强视角 Viewing Angle	2θ1/2		---	130	---	Deg	IF=5mA

五、光电参数代表值特征曲线/Typical Electrical-Optical Characteristics Curves

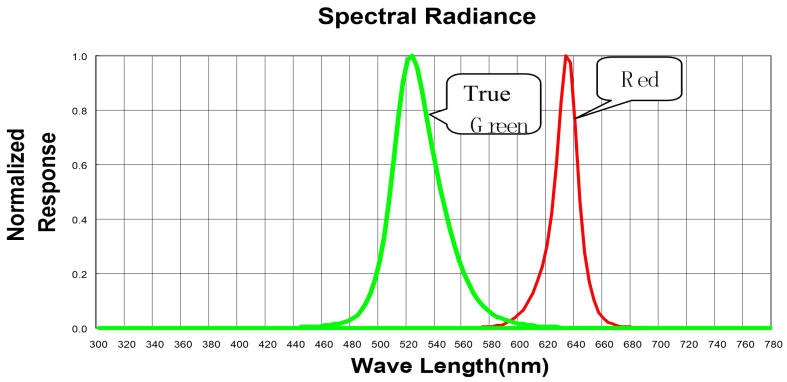

Fig.1 RELATIVE INTENSITY VS. WAVELENGTH

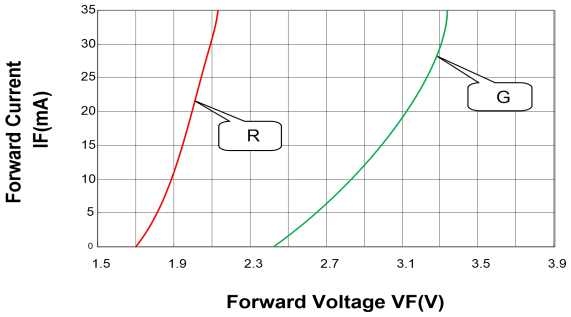

Fig.2 FORWARD SURRENT VS. FORWARD VOLTAGE

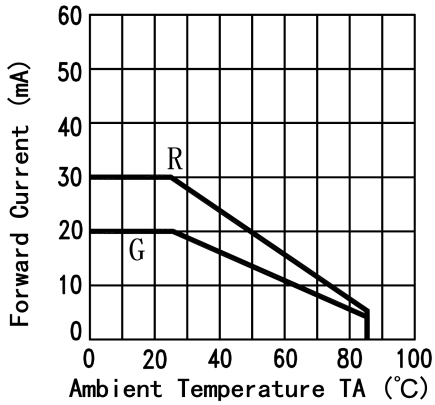

Fig.3 FORWARD CURRENT DERATING CURVE

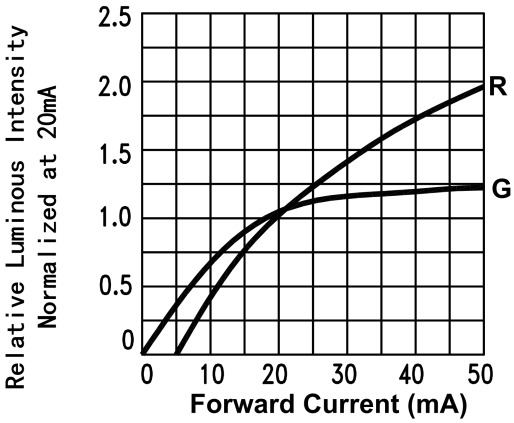

Fig.4 RELATIVE LUMINOUS INTENSITY VS.FORWARD CURRENT

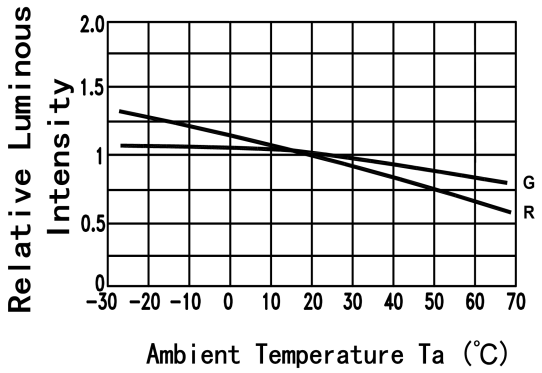

Fig.5 Luminous Intensity vs.Ambient Temperature

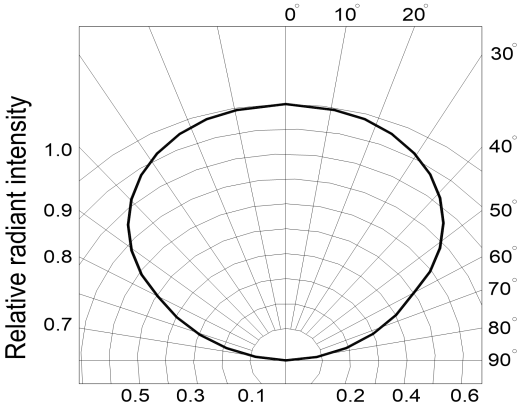

Fig.6 Radiation diagram

注:　如无另外注明，测试环境温度为/Note: If not otherwise indicated, the test environment temperature is 25 + 5°C.

六、标签及标识/Label Explanation

光强/IV　（单位（mcd））
波长/WD　（单位（nm））
电压/VF　（单位（V）

七、包装载带与圆盘尺寸/Reel And Tape Dimensions

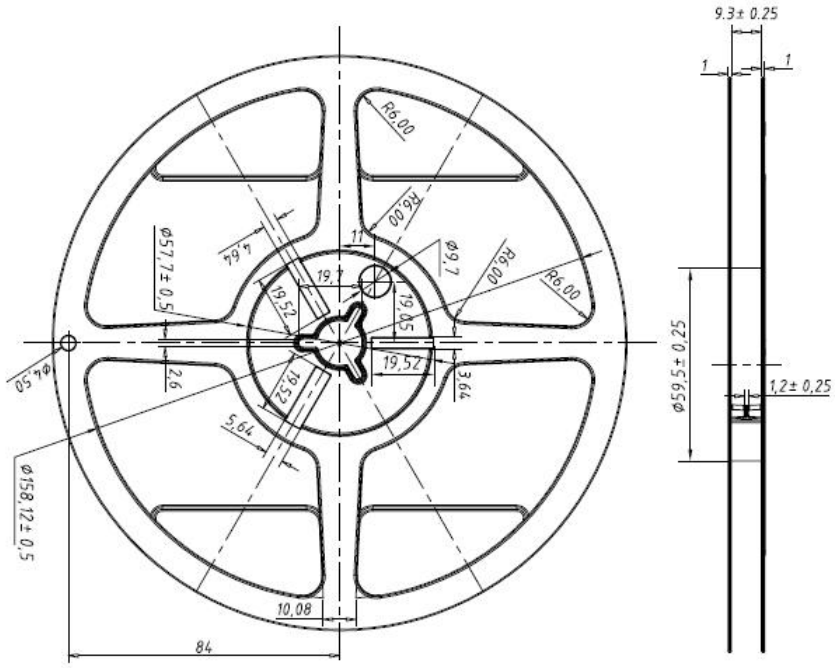

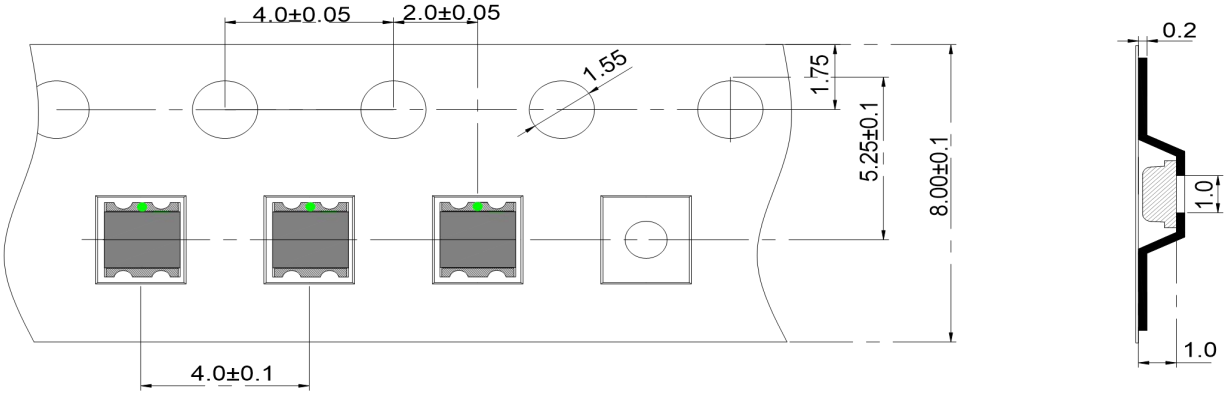

注/Notes:
1. 尺寸单位为毫米/All dimensions are in millimeters(mm).
2. 尺寸公差是±0.1/Tolerance is ± 0.1 mm unless otherwise noted mm.

八、圆盘及载带卷出方向及空穴规格/Winding direction and hole specification of disc and belt

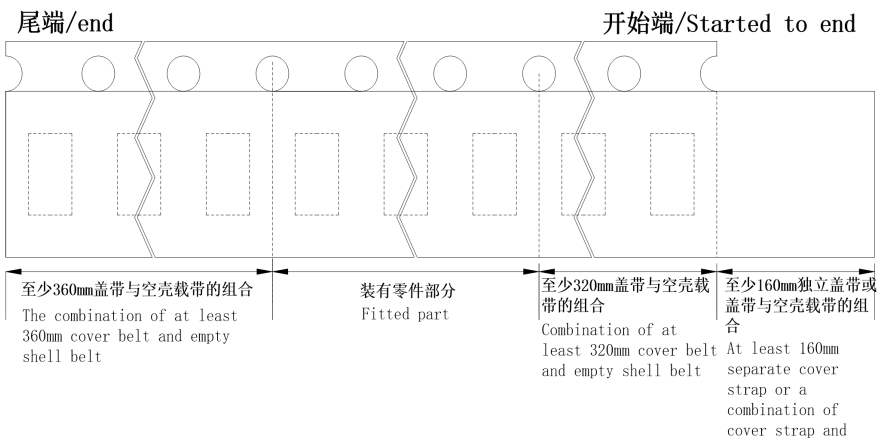



九、包装/packaging

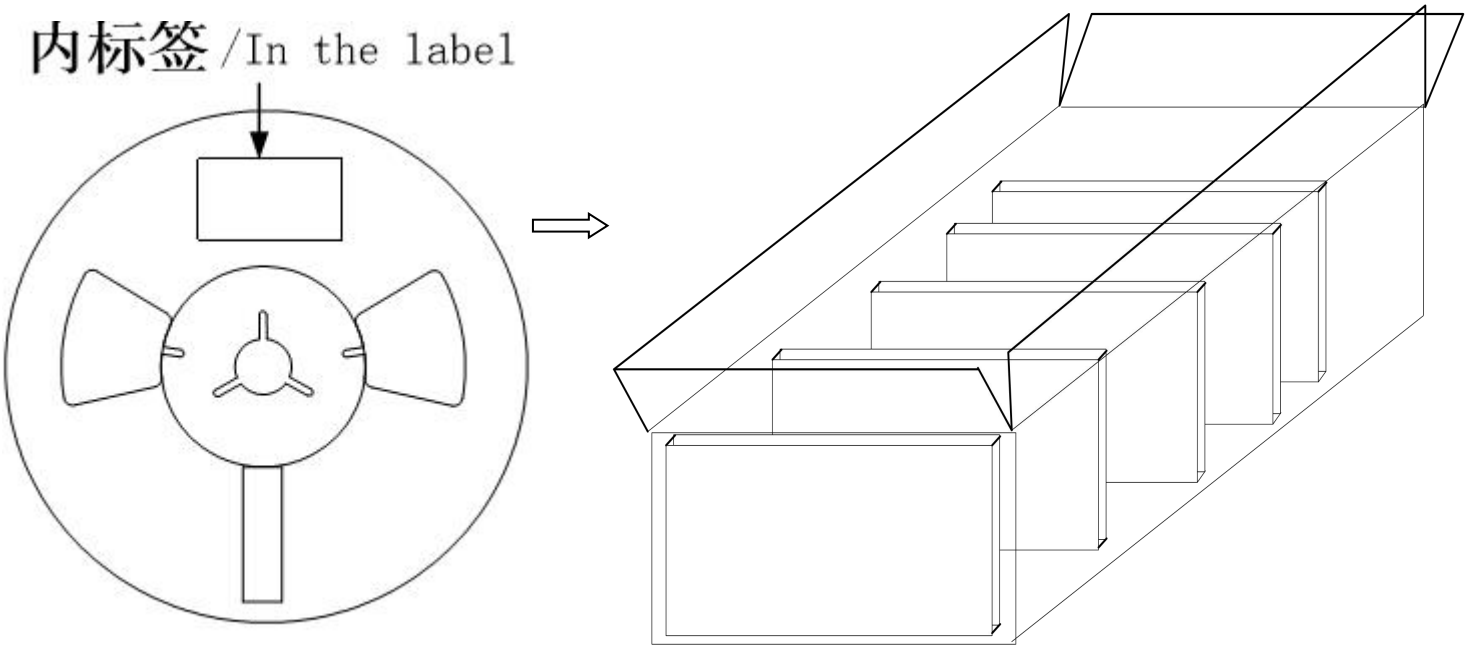

圆盘/Disc

小盘：100 盘/箱或 50 盘/箱

Small plates: 100 plates/carton or 50 plates/carton

十、信赖度测试/Reliability Test Items And Conditions

类别 Category	测试项目 Test Item	测试环境 The test environment	测试时间 The test of time	参考标准 The reference standard
耐久性测试 Durability test	工作寿命 The working life	室温条件下以最大额定电流持续点亮;以 20mA 测试。 Continuously lit with maximum rated current at room temperature;Test at 20mA.	1000 小时（-24 小时，+72 小时）	MIL-STD-750D:1026 MIL-STD-883D:1005 JIS C 7021:B-1
	高温高湿储存 High temperature and high humidity storage	IR-Reflow In-Board, 2 Times 环境温度Ta= 85±5℃,相对湿度RH= 85±5% Ambient temperature Ta= 85±5℃, relative humidity RH=85±5%	240 小时（+ 2 小时）	MIL-STD-202F:103B JIS C 7021:B-11
	高温储存 High temperature storage	环境温度/The environment temperature Ta= 85±5℃	1000 小时（-24 小时，+72 小时）	MIL-STD-883D:1008 JIS C 7021:B-10
	低温储存 Low Temperature Storage	环境温度/The environment temperatureTa= -40±5℃	1000 小时（-24 小时，+72 小时）	JIS C 7021:B-12
	冷热冲击 Cold and hot shock	IR-Reflow In-Board, 2 Times 100± 5℃ ～ -40℃ ± 5℃ 30mins 30mins	50 次循环	MIL-STD-202F:107D MIL-STD-750D:1051 MIL-STD-883D:1011
	抗锡试验 Tin test	焊锡温度/Soldering temperatureT.sol= 260 ± 5℃	10±1secs2 次	MIL-STD-202F:210A MIL-STD-750D:2031 JIS C 7021:A-1
	红外回流焊 有铅制程 Infrared reflow welding On a lead	升温速度(183℃到最高值) ：最大 3℃/秒 维持温度在 125(±25)℃： 不超过 120 秒 维持温度在 183℃以上： 60-150 秒 最高温度限制范围：225℃+5/-0℃ 维持在 225℃+5/-0℃时间：10-15 秒 降温速度： 最大 6℃/秒 Heating rate (183℃ to maximum) : maximum 3℃/ s Maintain temperature at 125(±25)℃ : not more than 120 seconds Maintain temperature above 183℃ : 60-150 seconds Maximum temperature limit: 225 ° C +5/-0 ° C Maintain at 225 ° C +5/-0 ° C time: 10-15 seconds Cooling rate: maximum 6℃/ s	--------	MIL-STD-750D:2031.2 J-STD-020C

	红外回流焊 无铅制程 Infrared reflow welding On a lead－free	升温速度(217℃到最高值) ：最大 3℃/秒 维持温度在 175(±25)℃： 不超过 180 秒 维持温度在 217℃以上： 60-120 秒 最高温度限制范围： 255℃+0/-5℃ 维持在 255℃+0/-5℃时间：5-10 秒 降温速度： 最大 6℃/秒 Heating rate (217℃ to maximum) : maximum 3℃/ s Maintain temperature at 175(±25)℃ : not more than 180 seconds Maintain temperature above 217℃ for 60-120 seconds Maximum temperature limit: 255℃+0/-5℃ Maintain at 255℃+0/-5℃ time: 5-10 seconds Cooling rate: maximum 6℃/ s	--------	MIL-STD-750D:2031.2 J-STD-020C
	可焊性试验 Weldability test	焊锡温度 T.sol= 235 ± 5℃ 浸入速度： 25±2.5 mm/秒 上锡率 ≧95% 焊盘面积 Solder temperature t.OL = 235 ± 5℃ Immersion speed: 25± 2.5mm/s Tin loading rate ≥ 95% of plate area	浸入时间 Immersion time：2±0.5 秒	MIL-STD-202F:208D MIL-STD-750D:2026 MIL-STD-883D:2003 IEC 68 Part 2-20 JIS C 7021:A-2

十一、注意事项/Cautions

使用/Use：

1、LED 是电流驱动元件，电压的细微变化会产生较大的电流波动,导致元件遭到破坏。客户应使用电阻串联作限流保护。

LED is a current driving element. A slight change in voltage will cause a large current fluctuation, resulting in component damage.The customer shall use resistance in series for current limiting protection.

2、为了确保多颗 LED 并联使用时光色一致，建议每条支路使用单独电阻,如下图模式 A 所示；

如采用下图模式 B 所示电路，LED 光色可能因每一颗 LED 不同的伏安特性而造成光色差异。

In order to ensure the parallel use of multiple leds is consistent in time and color, it is recommended to use A separate resistor for each branch, as shown in mode A in the figure below.

If the circuit shown in mode B below is adopted, the LED light color may be different due to the different volt-ampere characteristics of each LED.

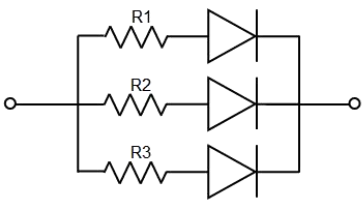

电路模式/Circuit model A

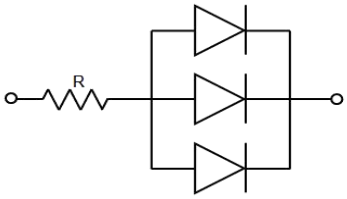

电路模式/Circuit model B

3、过高的环境温度会影响 LED 的亮度以及其他性能, 所以为能使 LED 有较好的性能表现应远离热源。

Too high ambient temperature will affect the brightness and other performance of LED, so in order to make the LED have better performance should be kept away from heat source.

4、光电参数公差/Photoelectric parameter tolerance：

正向电压 REF / VF： ±0.1V

亮度 CAT / IV： ±10 %

波长 HUE / WLD： ±1nm

存储/Storage：

1、未打开原始包装的情况下，建议储存的环境为: 温度:25℃±5℃；湿度: 40%RH 以下。

When the original package is not opened, the recommended storage environment is: temperature :25℃±5℃;Humidity: below 40%RH.

2、LED 是湿度敏感元件，为避免元件吸湿，建议打开包装后，将其储存在有干燥剂的密闭容器内，或者储存在氮气防潮柜内。

LED is a humidity sensitive element. To avoid hygroscopic, it is recommended to store it in an airtight container with desiccant after opening the package, or in a nitrogen moisture-proof cabinet.

3、如果干燥剂失效或者拆开包装后元件暴露于空气中超过 168 小时（7 天），应作除湿处理。

烘烤条件：60℃ * 24 小时。

If the desiccant fails or the element is exposed to air for more than 168 hours (7 days) after opening the package, dehumidification shall be performed.Baking conditions: 60℃ * 24 hours.

静电防护/ESD:

LED（特别是 InGaN 结构的蓝色、翠绿色、紫色、白色、粉红色 LED）是静电敏感元件, 静电或者电流过载会破坏 LED 结构。LED 受到静电伤害或电流过载可能会导致性能异常，比如漏电流过大,VF 变低,或者无法点亮等等。所以请注意以下事项：

Leds (especially the blue, emerald, purple, white, pink LEDS of the InGaN structure) are static sensitive elements, and static electricity or current overload can destroy the LED structure.LED exposure to static damage or current overload may cause performance anomalies such as high leakage flow, low VF, or failure to light.So please note the following:

1、接触 LED 时应佩戴防静电腕带或者防静电手套。

Anti-static wrist band or anti-static gloves should be worn when contacting LED.

2、所有的机器设备、工制具、工作桌、料架等等，应该做适当的接地保护。

All machinery, equipment, tools, work tables, racks, etc., shall be properly grounded.

3、储存或搬运 LED 应使用防静电料袋、防静电盒以及防静电周转箱，严禁使用普通塑料制品。

Anti-static bags, anti-static boxes and anti-static circulation boxes should be used for storage or handling of LED, and ordinary plastic products are strictly prohibited.

4、建议在作业过程中，使用离子风扇来压制静电的产生。

It is recommended to use ionic fans to suppress the generation of static electricity during operation.

5、距离 LED 元件 1 英尺距离的环境范围内静电场电压小于 100V。

The electrostatic field voltage is less than 100V within the ambient range of 1 foot away from the LED element.

清洗/Cleaning:

建议使用异丙醇等醇类溶液清洗 LED，严禁使用腐蚀性溶液清洗。

It is recommended to use isopropanol and other alcohol solutions to clean the LED. Corrosive solution is strictly prohibited.

焊接/welding:

1、回流焊焊接条件参考第一页温度曲线。

Reflow welding conditions refer to the temperature curve on page 1.

2、回流焊焊接次数不得超过两次。

Reflow welding shall not exceed two times.

3、只建议在修理和重工的情况下使用手工焊接；最高焊接温度不应超过 300 度，且须在 3 秒内完成。烙铁最大功率应不超过 30W。

Manual welding is only recommended in the case of repair and heavy industry;The highest welding temperature shall not exceed 300 degrees and shall be completed within 3 seconds.Maximum power of soldering iron shall not exceed 30W.

4、焊接过程中,严禁在高温情况下碰触胶体。

During the welding process, it is strictly prohibited to touch the gel at high temperature.

5、焊接后，禁止对胶体施加外力，禁止弯折 PCB，避免元件受到撞击。

After welding, do not apply external force to the colloid, and do not bend THE PCB to avoid the element being hit.

其他/other:

1、本规格所描述的 LED 定义应用在普通的的电子设备范围（例如办公设备、通讯设备等等）。如果有更为严苛的信赖度要求，特别是当元件失效或故障时可能会直接危害到生命和健康时（如航天、运输、交通、医疗器械、安全保护等等），请事先知会敝司业务人员。

The LED definition described in this specification applies to the scope of common electronic equipment (such as office equipment, communication equipment, etc.).If there are more stringent reliability requirements, especially when component failure or failure may directly endanger life and health (such as aerospace, transportation, traffic, medical equipment, safety protection, etc.), please inform our business personnel in advance.

2、高亮度 LED 产品点亮时可能会对人眼造成伤害，应避免从正上方直视。

High-brightness LED products may cause harm to human eyes when they are lit, so avoid looking directly from above.

3、出于持续改善的目的，产品外观和参数规格可能会在没有预先通知的情况下作改良性变化。

For the purpose of continuous improvement, the appearance and specifications of the product may be changed in a benign way without prior notice.

十二、亮度、电压、颜色等级区分/Distinguish between brightness, voltage and color levels

1.亮度等级/Brightness level（IF=5mA)

等级/level	红光/Red		绿光/Green	
	最小值/Min（mcd)	最大值/Max（mcd)	最小值/Min（mcd)	最大值/Max（mcd)
1	35	45	160	180
2	35	50	180	200
3	/	/	200	220

每组数据公差为/The tolerance of each set of data is 10%

2.波段等级/Band level（IF=5mA)

等级/level	红光/Red		绿光/Green	
	最小值/Min(nm)	最大值/Max(nm)	最小值/Min(nm)	最大值/Max(nm)
1	620	625	518	521
2	/	/	521	524
3	/	/	524	527
4	/	/	527	530

每组数据公差为/The tolerance of each set of data is ±1nm

3.电压等级/Voltage grade（IF=5mA)

颜色/Color	红光/Red	绿光/Green	
等级/level	1	1	2
范围（V)	1.8-2.1	2.6-2.8	2.8-3.0

每组数据公差为/The tolerance of each set of data is ±0.1V

十三、免责声明/Disclaimer

◆任何超出本规格书中建议的存放条件、使用条件及绝对最大额定参数条件，而造成的产品损坏或连带事故的发生，我司概不负责赔偿或承担连带责任；

We shall not be responsible for compensation or joint liability for any product damage or joint accident caused by exceeding the storage conditions, use conditions and absolute maximum rated parameter conditions recommended in this specification;

◆为避免任何可能的产品损坏或危害生命健康的风险，在使用本产品前建议先咨询我司；

In order to avoid any possible risk of product damage or endangering life and health, it is recommended to consult our company before using this product;

◆未经我司书面许可，禁止对产品进行任何形式的拆解和逆向工程分析，所有有关本产品的分析测试报告，必须报告给我司；

Disassembly and reverse engineering analysis of the product in any form is prohibited without written permission of our company. All analysis and test reports related to the product must be reported to our company.

◆我司尊重并保护知识产权，未经我司许可的销售行为直接或间接引发的知识产权纠纷的，我司不承担法律责任；

Our company respects and protects intellectual property rights. If any intellectual property dispute is directly or indirectly caused by any sales activity without our company's permission, our company shall not bear legal liability.

◆本产品任何形式的升级换代，若非必要，恕不另行通知；

Any upgrade or upgrade of this product in any form is not necessary without prior notice.

◆本产品规格书中其它未尽事宜，请致电或咨询我司销售部门。

For other matters not mentioned in this product specification, please call or consult our sales department.