DHE | 定华

Sensor · Software · Solution · Service

XI'AN DINGHUA ELECTRONIC TECHNOLOGY CO., LTD.

Marketing center address: 5th floor, Building F-2B, Guangde Rd.,
High-tech Development Zone, Xi'an, Shaanxi, 710065, China
Fax: +86 029-8832 5028
Sales department
Tel.: +86 029-8248 8463/029-8579 8558
Customer service center
Tel.: +86 029-8831 2362/029-8579 8558
Marketing department
Tel.:+86 029-8831 7762-323/029-8579 8558
Website: www.dhechina.com
Service mail: sales@dhechina.com
Product Center
Address: A2-4F, 1# Standard Factory, No. 39, Chuangye Avenue,
New Industrial Park, High Tech Zone, Xi'an, Shaanxi, China

Wuxi Dinghua Sensing Network Technology Co., Ltd. (DHE Wuxi Branch)

Address: Room 1606, Tai Lake Pearl Development Building, No. 1890,
Western Taihu Rd., Binhu district, Wuxi, Jiangsu, 214125, China
Tel.: +86 0510-8519 2626
Fax: +86 0510-8519 2628
Website: www.dhe-wsn.com

Need to know more?

Please log on our website or add our WeChat service official account. Welcome to call or mail us for any requirement, our customer service staff will give you satisfactory help timely.

Quality Service

For installation, debugging maintenance and support please scan the QR code

CQM quality system certification · Explosion-proof certification · Innovation fund support project · National torch program · First prize of science and technology in Shaanxi province · First prize of Sinopec technology · PetroChina network accessing qualification · CNOOC Supplier · Functional safety integrity level certification · Second price of national award of technological invention

Note: Our company is committed to continuously improve the quality of our products, so we reserve the right to modify the information in this sample without notice, and the right to interpret its content belongs to Xi'an Dinghua Electronic Technology Co., Ltd.

Version 2023



DHE Series Radar Level Gauge

Product Catalog

DHE | 定华

Sensor · Software · Solution · Service

DHE Series Radar Level Gauge

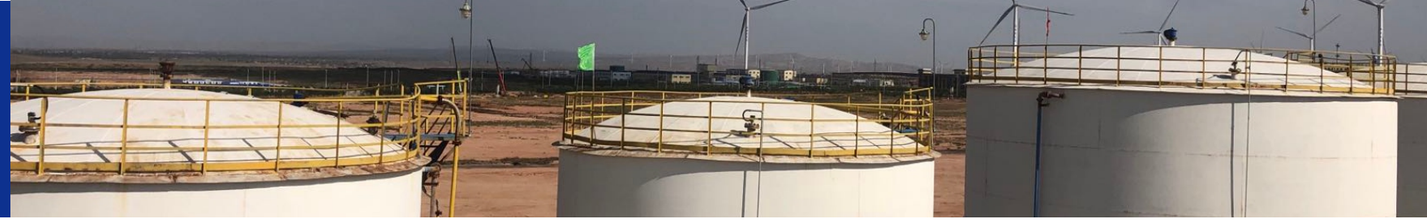

Our oil depot has been using products of DHE since August, 2011. These products remain good effects. So we chose to buy 3 more radar level gauges from DHE last year.

PetroChina Daqing
Petrochemical Company
Instrument engineer







❶ DHE won the second price of National Award of Technological Invention.

❷ Professor Wang Dinghua: the inventor of non-contact level instruments and founder of DHE

❸ DHE was listed on the National SME share transfer system. Stock abbreviation: DinghuaDianzi, Stock code: 837793

COMPANY PHILOSOPHY

Provide first-class automatic instruments to the world
Care Responsibility Esteem Study Credibility

ABOUT US

Xi’an Dinghua Electronic Technology Co., Ltd (DHE) (stock code: 837793), founded in 1992, is a leading technology enterprise in the industry. DHE has always been highly praised by the industry for its leading engineering technology, unremitting pursuit of innovation, excellent quality and outstanding reliability. DHE has made itself a nationwide enterprise. Our products are widely used in petroleum, chemical industry, storage and transportation, electric power, medicine, new energy and many other fields, and we have become a high-quality supplier of large enterprise groups such as Sinopec, PetroChina, CHEMCHINA, and China Aerospace.

During the past three decades, DHE has always attached great importance to users’ needs and independent innovation. We have developed ELL Sonar Non-contact Level Meter, DHE Radar Level Meter, DHE Tuning Fork Level Switch, DHE Non-contact Temperature Sensor and other automatic instruments widely used in various industrial fields. These products have been put on the market for many years. We continuously develop, improve and upgrade our products so that to remain our technology and products at the leading level at home and abroad, and to make our products more reliable, more safe and more advanced.

DHE devotes itself to the research of basic theory and application technology, and was awarded the second price of National Award of Technological Invention, the first prize of science and technology in Shaanxi province, and was rated as the “specialized, refined, featured and innovative" enterprise in Shaanxi Province, “key scientific and technological innovation team in Shaanxi”, “independent innovation model enterprise”, and “automation products most concerned by professional users”. Besides, we had successfully accomplished National High Technology Research and Development program of China (863 program), national development project for internet of things, key technology research projects of State Administration of Work Safety for production safety, Innovation fund of the Ministry of Science and Technology, major scientific and technological innovation projects of Shaanxi province and other state and local level major scientific and technological programs and projects. By owning nearly 20 invention patents and several patents for utility models authorized by SIPO (State Intellectual Property Office of the I. P. C), we had formed a professional patent group in certain field.

DHE adheres to the mission and vision of “Providing first-class automatic instruments to the world”, fulfills the culture of “care, responsibility, respect, esteem, credibility” and cre01ates value, honor and pleasure for each customer, partner and friends.

CONTENTS

Company Introduction 01
Qualifications and Honors 03
Outline Structure Drawings 05
Industry Applications 07
G80 FMCW Radar Level Gauge 11
Pulse Radar Level Gauge (5100 series) 15
Guided Wave Radar Level Gauge (4100 series) 19
Working Conditions Form 23
Classic Cases 24
Part of Users 26

DHE Series Radar Level Gauge



Since 2017, our company has been using various products from DHE in tank farm projects, and among these products, the radar level gauges state good effect of measurement. We are very satisfied with DHE's products and hope that DHE can maintain the quality of the products and continue to cooperate with us.

An automation engineering Co., Ltd in Shanghai
Instrument engineer



QUALIFICATIONS AND HONORS



Second price of National Award of Technological Invention



First prize of Science and Technology in Shaanxi province



First prize of Scientific and Technological Progress of China Petroleum and Chemical



Innovation Funds from Nation's Technology Ministry



Accomplished national "863" program



Independent Innovation Model Enterprise in Xi'an high-tech zone

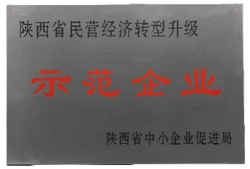

Model Enterprise of Transformation and Upgrading of Private Economy in Shaanxi Province



Second prize of Scientific and Technological Progress of CFLP (China Federation of Logistics & Purchasing)



Chairman Unit of IOT Enterprise Alliance



PetroChina Network Accessing Qualification



Shaanxi Yanchang Petroleum Network Accessing Qualification



Media coverage





Patents



Participated in the compilation of national standards



National High-tech Enterprise



Software Provider Certification



Software Product Registering Certificate



Software Copyright Registering Certificate



Comprehensive Credit Rating Certificate AAA



Key Scientific and Technological Innovation Team in Shaanxi



Member of China Instrument and Control Society



Qualified Supplier of Sinopec Industry



"Specialized, Refined, Featured and Innovative" Small and Medium-sized Enterprise in Shaanxi Province



Shaanxi Small and Medium-sized Enterprise Innovation R & D Center



Certification of Quality, Environment and Occupational Safety and Health Management System



Key Products of civil-military Integration in Shaanxi Province



Civil-military Integration Enterprise in Xi'an



Safety Integrity Level 3 (SIL3) Functional Safety Certificate



Top ten brands of level instruments concerned by the industry



Explosion-proof Certificate



Most concerned instrument automation products by professional users

USERS' USAGE REPORTS



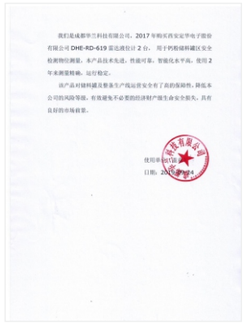



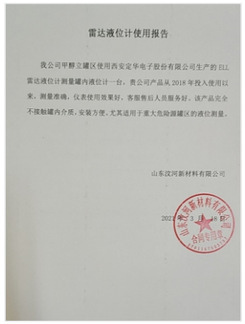



G80 FMCW Radar Level Gauge



I'm the on-site instrument operator and I think DHE's products are easy to install and barely need maintenance, so they are convenient for using

A chemical plant in Shandong
Instrument operator



EIGHT CHARACTERISTICS

Reliability

"ELL signal analysis technology" can reduce the impact of various false echoes to ensure high reliability of products.

Safety

it is designed and produced based on IEC61508 standard to ensure high safety of products.

Double cavity enclosure

it fully realizes the isolation of circuit cavity to ensure the safety of using electricity on-site.

Lightning protection

DHE G80 is equipped with built-in lightning surge protection to protect the instrument from lightning interference.

High precision

it adopts FMCW frequency modulation technology, and the product accuracy can reach ± 1mm.

Small beam angle

it adopts the beam angle of 3 ° technology, which greatly improves the anti-interference ability.

Small blind zone

it adopts small blind zone technology which can reduce the blind zone to a minimum of 2cm.

Millimeter wavelength

It adopts millimeter wavelength technology, which has the ability to penetrate smoke, dust and fog, and is suitable for complex working conditions.

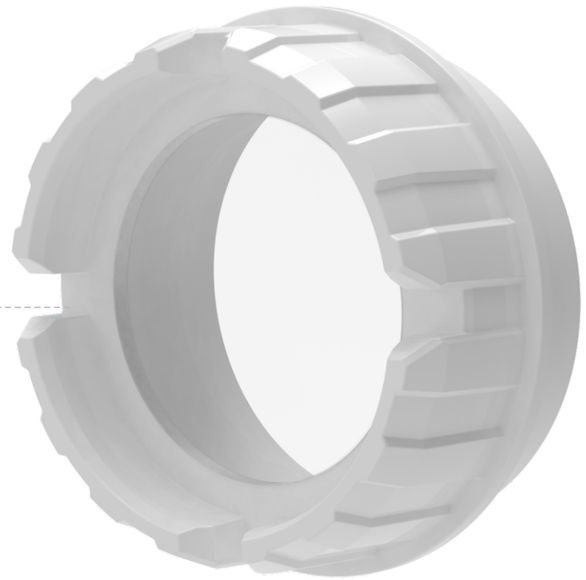

Housing

- Aluminium alloy
- Stainless steel



Electronic component

- 4-20mA/Hart
- Modbus

- electronic module

Display

- LCD display

Process connection

- Thread
- Flange

Antenna form

- Lens antenna
- PTFE Fully filled flush antenna

PRODUCT ADVANTAGES

Remote Debugging	G80 can be remotely debugged through the remote communication module.
Super Large Range	the maximum measuring range of G80 is 120m.
High Temperature Resistance	G80 can measure the medium of which the temperature is less than or equal to 200 ℃.
Multiple output modes	4~20mA，HART，Modbus.
Super small antenna	G80 can be installed on the screw thread of which the size is greater than or equal to G1 .
Large bandwidth	It adopts 5GHz bandwidth technology to ensure product resolution and high signal-to-noise ratio.

G80 FMCW Radar Level Gauge



DHE's after-sales service is very good, with timely response and frequent follow-up visits to understand the condition of the instrument. We are confident about the product.

A chemical factory in Jiangsu
Instrument director



INDUSTRIAL APPLICATIONS

Industry introduction Tank type and installation diagram	Introduction to industry application of radar level gauge						
	Chemical Industry	Petrochemical industry	Pharmaceutical industry	Food industry	Mining industry	Cement	Water treatment
	The chemical industry has high requirements for level measurement technology. Radar level gauges have high accuracy, wide range, high stability, and they are easy to debug and operate, which determines their significant advantages over other measurement methods in the chemical industry.	The petrochemical industry must rely on measuring the level of different process steps. In addition to following the current explosion-proof regulations, there are also high requirements for the reliability of instruments. Radar level gauges are particularly suitable for measuring hydrocarbons in the petrochemical industry, as they can measure the level without being affected by temperature, pressure, density, etc. They can meet the measurement requirements of large capacity and different sizes of containers.	The equipment used for the production of pharmaceuticals is usually smaller than traditional chemical production equipment, so there is a high demand for sensor technology for precise measurement of containers. The measured media are usually with high value, small measurement range, limited space, and high hygiene requirements. The need for a level gauge has emerged for these small reactors and filling equipment.	All liquid or paste foods we consume every day are stored, mixed and processed in containers of different specifications. Especially in small containers with mixing devices, severe condensation or the formation of attachments on sensors often occur. The radar level gauge is not affected by medium attachments and condensates, and can fully meet the requirements of the food industry.	In the mining industry, the level of stone materials in solid silos and various ash silos can be measured by radar levels. The mineral state can be divided into dust like, granular, and block like. Its dielectric constant is usually relatively small. A signal amplifier has been specially added to the circuit part of the solid-state radar level gauge to enhance the radar echo signal and ensure the measurement stability and accuracy of the radar level meter at the solid-state level.	By utilizing radar level gauge technology in cement kilns, a dynamic prediction model is established to achieve a complete view of the entire production life of cement clinker. Monitoring and controlling production greatly improve the stability of the kiln, overall production speed, reduces material losses, and energy costs per ton of finished products.	The liquid level measurement in the water treatment industry mainly includes water collection wells, coarse grids, fine grids, biochemical reaction tanks, flushing tanks, sludge tanks, and well dissolution tanks. Except for ultra long range and narrow spaces such as water collection wells, other environments are relatively simple. The radar level gauge can work stably and measure accurately in all the above situations.
	The liquid level measurement of reaction process tanks has always been a challenge, and there are many reaction process tanks in the chemical industry. Due to the presence of stirring, heat tracing and other equipment in most reaction process tanks, many instruments cannot function properly. G80 FMCW radar level gauge is not affected by factors such as mixing and heat tracing.		Buffer tanks are also very common in the pharmaceutical production process, and the medium inside the buffer tanks often has some mixing and reaction process. So there usually exist many stirring or submerged pumps in the tank. G80 FMCW radar level meter has lens antenna with strong signal and does not afraid of medium splashing and adhesion. So it is very suitable for measurement working conditions with stirring.	There often exist process cans in food processing technology. Food would be stirred, heated, and converted in a process tank. For tank with stirring, G80 FMCW radar level gauges are often used. Due to the presence of stirring, medium splashing may occur, causing attachments to stick to the antenna. However, the antenna of frequency modulation radar is small, with strong signal, and is almost unaffected by attachments.	In the mining industry, process tanks are mainly used for mineral mixing and reprocessing. Taking bauxite as an example, bauxite is first mixed with sodium hydroxide, autoclaved, and then stirred. Then, it is sent to a calciner where it is dehydrated into white fine powder - alumina. G80 FMCW radar level gauge can accurately measure the level of materials in the tank, ensuring the optimal operation of the process.	Before the cement powder is burned in the rotary kiln, the materials from the mixed bed and aggregates are ground into fine raw materials in a large mill. Then, the powder material is transported to the silo through a pneumatic conveying system. Reliable level monitoring is crucial for optimizing raw material storage. G80 FMCW radar level gauge can fully meet the requirements of this working condition.	
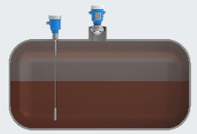	There are many horizontal tanks in the chemical industry, mostly with a diameter of about 1-4 meters. The media are highly corrosive, flammable, and explosive hazardous. Its range is small, and the guided wave radar is cheap and cost-effective; Both pulse radar and G80 FMCW radar level gauge uses tetrafluoro anti-corrosion technology, which provides better measurement results for highly corrosive media. The above three types of radar level meters can all be used to measure levels in horizontal tank conditions.	In many applications in refineries, temporary storage tanks are required to store input and output materials for each process step. Most of these containers are horizontal tanks with a range of 2-4 meters. To ensure efficient completion of the refining process, the key is to be able to accurately measure the liquid level in the storage tank at any time, so as to ensure the provision of various corresponding media when needed. Guided wave, pulse, and frequency modulated radar can all be used in this operating condition. Guided wave radar is cheap and cost-effective; High accuracy of pulse radar and G80 FMCW radar; G80 FMCW radar is more suitable for media with anti-corrosion requirements and media that may produce attachments.	In pharmaceutical production, most commonly used solvents and reaction media are stored in horizontal tanks, with a range of 2-3 meters. For high hygiene requirements, use G80 FMCW radar level gauge for measurement. For those with low hygiene requirements, guided wave radar level meters are used.	In the food industry, the vast majority of liquid foods (drinks) are stored in horizontal tanks. During the brewing process of most liquid foods (drinks), there is always a thick layer of foam (such as wine, milk) in the tanks. The G80 FMCW radar level gauge has a large signal and strong penetration, and is usually used to measure the liquid level of this type of storage tank.			
				Grain silos are the most common storage tanks in the food industry. Filling the silo will generate a large amount of dust, and the grain belongs to solid particles. G80 FMCW radar level gauge is used for solid particles. Frequency modulation requires a stronger signal and can penetrate dust to measure materials.	Silos are the main containers for storing solid minerals, and the extracted ore is transported to large aboveground or underground silos through transportation systems, where it is stored until used for production. Reliable level measurement is required to determine the contents of the silo. The G80 FMCW level gauge is the best measuring instrument for this working condition.	In order to obtain high-quality and uniform material consistency in the finished cement, the raw materials are homogenized in a so-called mixed bed. The rocks are evenly distributed on the mixed bed using a stacker. Use a scraper to remove the material. To ensure the uniform distribution of incoming materials as much as possible, it is necessary to continuously measure the material level. G80 FMCW radar level gauge can fully meet the requirements of this working condition.	Using underground water pumps to transport groundwater from deep wells to the surface. At this point, water collection must be stopped before overflow. Therefore, reliable and maintenance free water level measuring instruments are required. Due to the high degree of immersion in groundwater wells, using guided wave radar can facilitate and economically measure groundwater levels, with a maximum measurement range of up to 100 meters.
	Spherical tanks are very common in the chemical industry, with diameters mostly greater than 10 meters. Commonly used to store pressurized media, which contain highly corrosive, flammable, and explosive hazardous media. Due to its large range, the G80 FMCW radar level gauge can measure liquid levels with a maximum range of 30 meters and an accuracy of ± 3mm.	In the petrochemical industry, most spherical tanks are used to store hydrocarbons, with a range of more than 10 meters. Taking the most common propane as an example, propane belongs to liquefied gas (LPG) and is a colorless and odorless flammable gas at room temperature. Propane is compressed and liquefied before being stored in a high-pressure container to prevent it from being re gasified. G80 FMCW radar level gauge can accurately measure its liquid level height, and guided wave radar can also be used for those with guided wave tubes.					
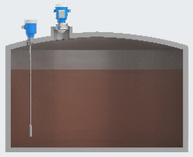	Vertical tanks are commonly used in the chemical industry to store atmospheric media, with a large range, mostly ranging from 10 meters to 30 meters, and often have an internal floating roof. When making type selection, it is necessary to consider whether to add a waveguide tube. The tank body equipped with a guided wave tube adopts a guided wave radar level meter, while the working condition without a guided wave tube adopts a G80 FMCW radar level gauge.	In the petrochemical industry, vertical tanks are mainly used to store finished oil, with a large range of 10-30 meters. Like finished gasoline and diesel, they are often stored in vertical tanks. At normal temperature and pressure, the G80 FMCW radar level gauge can accurately measure the liquid level.					

DHE Series Radar Level Gauge



DHE’s radar products operate well and have been installed since 2017 without maintenance. We are satisfied with the quality and service of the products.

A pharmaceutical factory in Shandong
Director of instrument workshop



PRODUCT INTRODUCTION

The DHE-RD series radar level gauges can be widely used for level measurement of liquids and solids. Even under high pressure, strong corrosiveness, high hygiene requirements, or extreme working conditions, the level of various media can be continuously measured. The DHE-RD series radar level gauges are divided into three types based on measurement purposes, material characteristics, and tank environment: FMCW radar level gauges, pulse radar level gauges, and guided wave radar level gauges.

PRODUCT PRINCIPLE

Product name	Product principle	Application	Application scenario
FMCW radar level gauge (G80 series)	The instrument emits a continuous radar signal through its lens antenna. The frequency of this signal will change like a sawtooth. The transmitted signal is reflected by the medium and received by the antenna as an echo signal. There is always a frequency difference between the received signal frequency and the current transmission frequency. The frequency difference is directly proportional to the material level in the container, and the accurate value of the level is calculated through a specific algorithm of the sensor. The G80 series operates with very low transmission power in the W-band range.	Occasions with high measurement accuracy requirements; For complex systems with stirring inside the tank, there is better measurement effect; A medium with low dielectric constant.	
Pulse radar level gauge (DHE-RD-5100 series)	The instrument emits extremely short microwave pulses through an antenna onto the measured medium, and the pulse signal is reflected off the surface of the medium and re received by the antenna. The running time from transmitting to receiving signals is proportional to the medium level inside the container. The DHE-RD-5100 series operates with very low transmission power in the K-band range.	For complex systems with stirring inside the tank, there is better measurement effect; A medium with low dielectric constant. Measurement under harsh process conditions such as strong corrosiveness and hygiene and sterility.	
Guided wave radar level gauge (DHE-RD-4100 series)	The instrument guides the microwave pulse downwards onto the measured medium through a waveguide rod, and some signals are reflected back. The level is determined by measuring the time difference between signal transmission and reception.	Small range storage tanks; Applications with steam, attachments, steam drums, and condensate water; The water level of the blast furnace drum.	

Product name	Product image
FMCW radar level gauge (G80 series)	
Pulse radar level gauge (DHE-RD-5100 series)	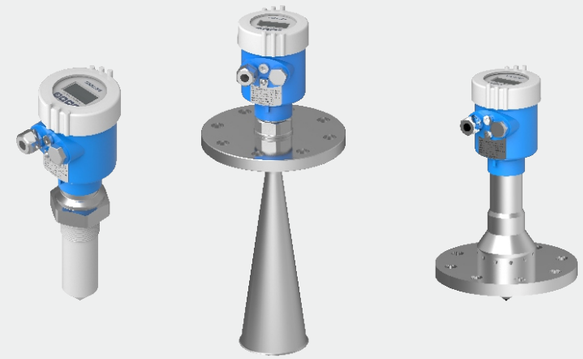
Guided wave radar level gauge (DHE-RD-4100 series)	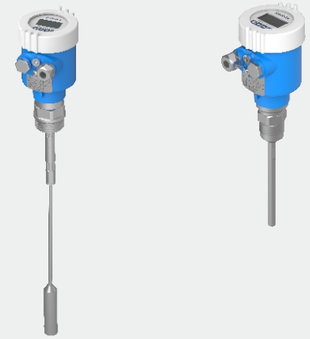

G80 FMCW radar level gauge



DHE's instruments have been running well on equipment in various process sections of our factory since 2010, and we are very satisfied with DHE's instrument installation services.

A chemical group in Shanxi
Instrument workshop engineer



TECHNICAL SPECIFICATIONS

Model	DHE-RD-5100-8
Type	Radar level gauge
Image	
Application	Various complex working conditions
Antenna	Lens antenna
Measurement range	0~120m
Process connection	Thread/Flange
Process temperature	(-40~200) ℃
Process pressure	-0.1~2.5MPa
Accuracy	±1mm
Output signal	(4~20) mA/Hart ; Modbus
Display	LCD display
Explosion-proof/ Protection grade	Ex ia IIC T6 Ga/IP67
Frequency	80GHz

OUTLINE STRUCTURE DRAWINGS

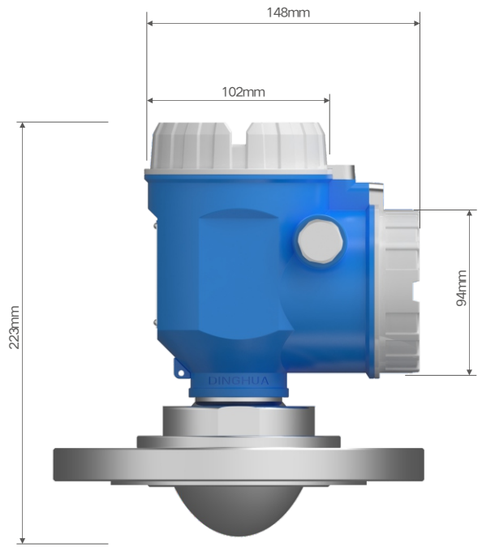



G80 FMCW radar level gauge



The service is very good, the personnel are professional, the troubleshooting is timely, and the instrument has been used for 6 years with good stability and high accuracy.

An alkali industry company in Qinghai
Instrument engineer



MODELS AND SPECIFICATIONS

Explanation		
Brand	DHE	A brand of DHE
Type	RD	Radar level gauge
Series	5100	Non-contact radar level gauge
Antenna type	8	80GHz
Safety certification	S	SIL2
	N	None
Explosion-proof certification	E	Ex d ia IIC T6 Gb Ex tD A21 IP67 T80℃
	I	Ex ia IIC T6 Ga Ex iaD 20 T80℃ IP67
	N	Non explosion-proof
Sensor type	T	Lens antenna
	F	Anti-corrosion antenna
	C	Purge antenna
	Y	Special customization
Range	010	10m
	020	20m
	030	30m
	060	60m
	120	120m
Process temperature	L	(-40~85)℃
	M	(-40~150)℃
	H	(-40~200)℃
	D	Customized (below -40 ℃ or above 200 ℃)
Accuracy	1	±1mm
	3	±3mm
Accuracy	5	±5mm
Process connection	D	G1½, Stainless steel 316L
	J	G3½, Stainless steel 316L
	F	Flange connection (larger than DN50)
	Y	Special customization
Output method	I	(4~20) mA
	H	(4~20) mA/Hart
	M	Modbus communication protocol available
Power supply	D	DC24V
	A	AC220V
Lightning protection	I	Built-in
	E	External
	N	None
Wire system	T	Two-wire system
	F	Four-wire system
Display	X	None
	L	LCD
	F	Split gauge outfit display
Housing material	A	Cast aluminum alloy
	S	Stainless steel
Housing type	S	Single chamber
	D	Dual chambers
Electrical interface	M	M20×1.5
	G	G 1/2"
	N	NPT 1/2"
	Y	Special customization

Pulse radar level gauge (5100 series)



The radar level gauge used on our company's gas holder is effective, stable, accurate, and barely requires maintenance, making it trustworthy.

A chemical factory in Shanxi
Instrument director



TECHNICAL SPECIFICATIONS

Model	DHE-RD-5100-3	DHE-RD-5100-4	DHE-RD-5100-5
Image		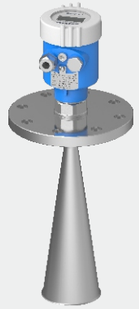	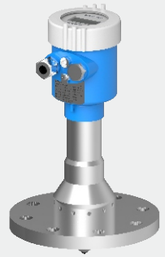
Application	Highly corrosive liquid medium	Liquid or solid media	Complex working conditions
Antenna	Tetrafluoro rod antenna	Stainless steel horn antenna	PTFE material panel antenna
Measurement range	0~10m	0~70m	0~40m
Process connection	Thread or flange	Flange or universal flange	Flange
Process temperature	(-40~200) ℃	(-40~200) ℃	(-40~200) ℃
Process pressure	-0.1~2.5MPa	-0.1~0.1MPa or -0.1~2.5MPa	-0.1~2.5MPa
Accuracy	±3mm	±5mm	±3mm
Output signal	(4~20)mA/Hart; Modbus	(4~20)mA/Hart; Modbus	(4~20)mA/Hart; Modbus
Display	LCD display	LCD display	LCD display
Explosion-proof/ protection grade	Ex ia IIC T6 Ga/IP67	Ex ia IIC T6 Ga/IP67	Ex ia IIC T6 Ga/IP67
Frequency	26GHz	26GHz	26GHz

OUTLINE STRUCTURE DRAWINGS

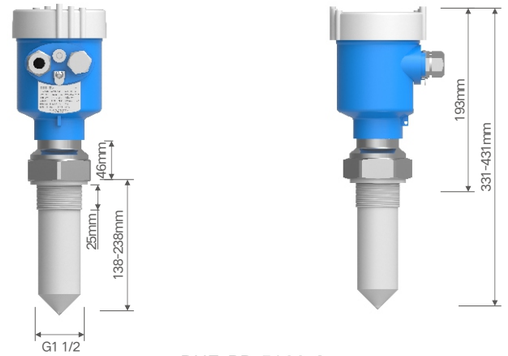

DHE-RD-5100-3

Thread specifications	Antenna diameter	Antenna height
G1½	φ45	100
G1½	φ45	200

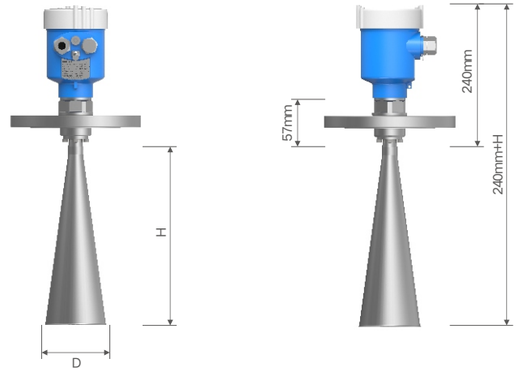

DHE-RD-5100-4

Thread specifications	Antenna diameter	Antenna height
DN50	φ46	140
DN80	φ76	227
DN100	φ96	288

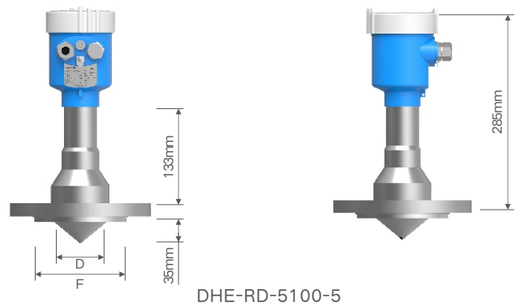

DHE-RD-5100-5

Thread specifications	Antenna diameter	Sealing surface diameter F	Number of holes and aperture
DN50	φ46	100	4×φ18
DN65	φ46	120	4×φ18
DN80	φ76	135	8×φ18
DN100	φ76	155	8×φ18
DN125	φ76	185	8×φ18
DN150	φ76	210	8×φ18

Pulse radar level gauge (5100 series)



Our company has been using instruments from DHE since 2017 and has purchased many.

A refrigeration new material company in Taizhou
Instrument engineer

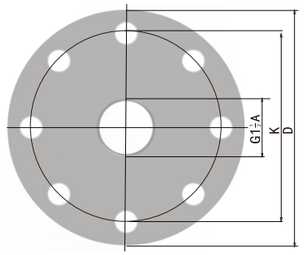

Flange specifications	Outer diameter of flange	Center hole distance K	Number of holes N	Aperture L
DN50	φ165	φ125	4	18
DN80	φ200	φ160	8	18
DN100	φ220	φ180	8	18
DN125	φ250	φ210	8	18
DN150	φ285	φ240	8	22
DN200	φ340	φ295	12	22
DN250	φ405	φ355	12	26

MODELS AND SPECIFICATIONS

Explanation		
Brand	DHE	A brand of DHE
Type	RD	Radar level gauge
Series	5100	Non-contact radar level gauge
Antenna type	3	Rod antenna
	4	Horn antenna
	5	Panel antenna
Safety certification	S	SIL2
	N	None
Explosion-proof certification	E	Ex d ia Ⅱ C T6 Gb Ex tD A21 IP67 T80℃
	I	Ex ia Ⅱ C T6 Ga Ex iaD 20 T80℃ IP67
	N	No explosion proof
Sensor type	A1	Rod sensor/PTFE material
	A2	Rod sensor/PP material
	B1	Horn sensor Φ76
	B2	Horn sensor Φ96
	B3	Horn sensor Φ146
	C1	Panel sensor/PTFE material
	C2	Panel sensor/PP material
	D1	Parabolic sensor

Sensor type	E1	Droplet sensor
Range	X	Specific value
Process temperature	M	(-40~130)℃
	H	(-40~200)℃
	Y	Special customization
Process connection	J	Thread connection
	F	Flange connection
	Y	Special customization
Output method	I	(4~20)mA
	H	(4~20)mA/Hart
	M	Modbus communication protocol available
Power supply	D	DC24V
	A	AC220V
Lightning protection	I	Built-in
	E	External
	N	None
Wire system	T	Two-wire system
	F	Four-wire system
Display	X	None
	L	LCD
	F	Split gauge outfit display
Housing material	A	Cast aluminum alloy
	S	Stainless steel
Housing type	S	Single chamber
	D	Dual chambers
Electrical interface	M	M20×1.5
	G	G 1/2"
	N	NPT 1/2"
	Y	Special customization

Guided wave radar level gauge (4100 series)



The DHE's radar level gauges we purchased have shown excellent performance and high accuracy on tanks with stirring, and we are very satisfied with them.

A new chemical material factory in Jiangsu Instrument engineer



TECHNICAL SPECIFICATIONS

Model	DHE-RD-4100-1	DHE-RD-4100-2
Image		
Application	liquid media with large measurement range	liquid media with small measurement range
Antenna	Cable antenna	Pole antenna
Measurement range	0~30m	0~6m
Process connection	Thread/flange	Thread/flange
Process temperature	(-40~200)℃	(-40~200)℃
Process pressure	-0.1~2.5MPa	-0.1~2.5MPa
Accuracy	±5mm	±5mm
Output signal	(4~20)mA/Hart; Modbus	(4~20)mA/Hart; Modbus
Display	LCD display	LCD display
Explosion-proof/ protection grade	Ex ia IIC T6 Ga/IP67	Ex ia IIC T6 Ga/IP67
Frequency	1.8GHz	1.8GHz

OUTLINE STRUCTURE DRAWINGS

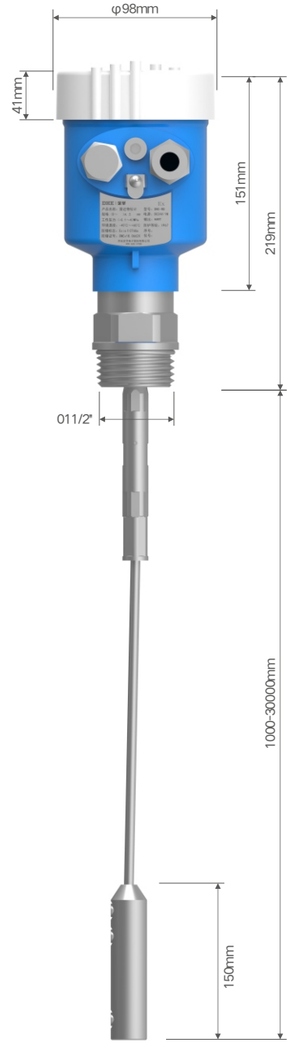

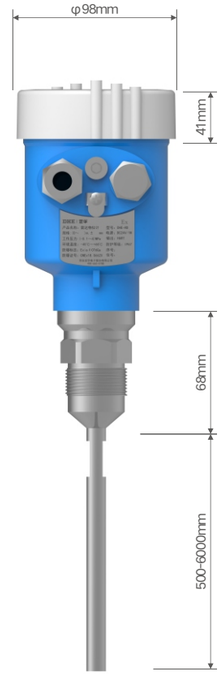

Guided wave radar level gauge (4100 series)



In 2018, I first learned about DHE during an instrument conference, and later used DHE's products in the project, and the results were really good.

A group company in Sichuan
Instrument engineer



MODELS AND SPECIFICATIONS

Explanation		
Brand	DHE	A brand of DHE
Type	RD	Radar level gauge
Series	4100	Contact radar level gauge
Antenna type	1	Cable antenna
	2	Pole antenna
Safety certification	S	SIL2
	N	None
Explosion-proof certification	E	Ex d ia II C T6 Gb Ex tD A21 IP67 T80℃
	I	Ex ia II C T6 Ga Ex iaD 20 T80℃ IP67
	N	Non explosion-proof
Sensor type	A1	Cable type sensor/stainless steel material
	A2	Cable type sensor/PTFE material
	B1	Pole type sensor/stainless steel material
	B2	Pole type sensor/tetrafluoro material
	C1	Coaxial-rod sensor/stainless steel material
	D1	Dual-cable sensor/stainless steel material
	D2	Dual-cable sensor/PTFE material
Range	X	Special value
Process temperature	M	(-40~130)℃
	H	(-40~200)℃
	Y	Special customization

Process connection	J	Thread connection
	F	Flange connection
	Y	Special customization
Output method	I	(4~20)mA
	H	(4~20)mA/Hart
	M	Modbus communication protocol available
Power supply	D	DC24V
	A	AC220V
Lightning protection	I	Built-in
	E	External
	N	None
Wire system	T	Two-wire system
	F	Four-wire system
Display	X	None
	L	LCD
	F	Split gauge outfit display
Housing material	A	Cast aluminum alloy
	S	Stainless steel
Housing material	S	Single chamber
	D	Dual chambers
Electrical interface	M	M20×1.5
	G	G 1/2"
	N	NPT 1/2"
	Y	Special customization

DHE Series Radar Level Gauge

DHE ' s radar products are indeed good and are ready for use in future export projects.

An import and export trading company in Xi'an
General manager



WORKING CONDITIONS FORM

Customer Information

Company: _____ Telephone: _____

Contacts: _____ Fax: _____

Address: _____ Email: _____ Mobile phone: _____

Postal Code: _____ Date: _____

License

☐ Standard type (non explosion-proof) ☐ Intrinsically safe (Ex ia IIC T6 Ga)

☐ Intrinsically safe + flameproof (Ex dia IIC T6 Gb)

Tank/container information

Tank type:

☐Tank ☐ Reaction tank ☐ Separation tank ☐ Marine storage tank

Tank structure: ☐ Tank material: _____ Pressure: _____ Mpa

Tank size: ☐ Tank height: _____ m Diameter: _____ m

Tank top: ☐ Arched top ☐Flat top ☐ Open top ☐ Cone top

Tank bottom: ☐ Conical bottom ☐Flat bottom ☐ Sloping bottom ☐ Curved bottom

Installation: ☐ Top mounted ☐ Bypass pipe mounted

☐ Side mounted ☐ Waveguide pipe mounted

Tank top installation connection pipe (important information)

Connection height: _____ mm Nozzle diameter: _____ mm

Measurement medium

Medium name: _____ ☐Liquid ☐ Solid ☐ Mixed Medium

Medium temperature: _____ Medium constant: _____

Hanging: ☐ yes ☐ no Feeding speed: _____

Mixing: ☐ yes ☐ no Stirring speed: _____

Process Connection

Thread: _____ Flange DN__ PN Sealing surface: _____

Electrical interface: _____ Executive standard: _____

Power supply: ☐24V DC ☐ 220V AC

Output: ☐Output: 4-20mA/Hart two-wire system ☐4-20mA four-wire system ☐Modbus

Display: ☐ With display ☐ Without display

CLASSIC CASES



A chemical plant in Jiangsu Liquid chlorine storage tank

Liquid chlorine is usually stored in high-pressure and low-temperature environments, with a temperature of around -20 ℃ and a pressure of around 1MPa. Due to the relatively small dielectric constant of liquid nitrogen (around 1.5), the measurement effect of conventional 26G radar products is not ideal, and signal loss often occurs. The signal strength of DHE-RD-5100-8 FMCW radar is significantly enhanced compared to 26G radar, and the measurement effect of low dielectric constant media is greatly improved.



A chemical Co., Ltd. in Henan Chlorinated paraffin

The working conditions of the user's chlorinated paraffin reaction kettle are relatively complex, with stirring, high process temperature, and easy crystallization of the medium. The radar used by the user previously had poor performance, and crystals often enveloped the radar antenna, causing the instrument to lose signal; And when the stirring was turned on, the radar often received interference signals. Later, the DHE-RD-5100-8 FMCW radar level gauge was replaced to solve the above problems. The signal of the FMCW radar level meter is strong, can penetrate crystals for measurement, and the beam angle is small, which can effectively avoid the stirring fan blades. The proprietary signal analysis technology of DHE is used to solve the problem of interference signals.



Acetylene gas holder A chemical plant in Shanxi

Accurate measurement of gas holder level is one of the important means to ensure stable acetylene flow rate, but its level measurement has always been a challenge. The user has successively used a steel level gauge and a single flange differential pressure transmitter. The steel strip level gauge has a complex structure and high installation cost, resulting in many measurement errors. The actual measurement effect is not very good. The single flange level gauge measurement method is simple, but the maintenance amount is too large, and the maintenance cost is high. The main reason is that the connection of the pressure pipe is prone to oil leakage, and maintenance personnel need to frequently inject oil. The operator needs to add oil to the top of the water seal platform and bell cover, which is both difficult and dangerous working conditions. When injecting oil, it is necessary to be very careful not to introduce air, causing bubbles to enter the pressure pipe, otherwise it may also cause measurement errors.

Lifting radar is now a reliable means of stably measuring the level of gas tanks. The DHE-RD-5100-8 series FMCW radar installed by the user has a beam angle of only 3 ° , which can avoid interferences such as baffle brackets, ensuring that the instrument can also accurately measure when the gas tank is in low position.

At present, there are not many working conditions for using radar to measure liquid level on gas holders. The installation of radar is simple, the measurement is stable, and maintenance is convenient. It is worth trying to reform for users having gas holders.

DHE Series Radar Level Gauge



Due to the extremely harsh environment on site, many domestic radars we used could not guarantee long-term normal and stable operation. After adopting DHE's radar products, we are very satisfied with their ability to maintain high accuracy and stable operation. I hope there will be opportunities for cooperation in the future.

A chemical plant in Yinchuan
Instrument director





A chemical plant in Hubei P-Nitrotoluene

The p-nitrotoluene tank in a chemical plant in Hubei is a vertical tank with a height of 7m, and the internal medium is p-nitrotoluene solution. After production, imported radar level gauges have been used for liquid level measurement. Due to the serious buildup of p-nitrotoluene as a medium, the user previously used an imported brand of 26G radar, which is prone to buildup inside the antenna, resulting in the loss of instrument signals. Before, users had to remove the radar every month and wipe off the crystals on the antenna before they could use it normally. Later, the user uses the DHE G80 FMCW radar level gauge, which worked very well. Users no longer have to remove the instrument every month to clean up crystals. The G80 FMCW radar uses a tetrafluoro lens antenna, which is very small in size, so the contact area is also very small, and the impact on crystallization is much smaller than that of the 26G radar.



A chemical plant in Yinchuan Resin

There is the stirring condition in the user's resin tank, with the temperature of the incoming and outgoing materials around 150 ℃. Previously, the user used the imported brand of 26G radar and often lost signals suddenly when stirring was on, mainly due to the severe fluctuation of the liquid level during stirring. After using the DHE G80 FMCW radar level gauge, there has been no further signal loss. The G80 has a small beam angle, which can effectively enhance the strength of the echo signal. The measurement effect is better in working conditions with stirring.



A pharmaceutical factory in Shandong Reductant

The double flange differential pressure level gauge previously used by the user is affected by changes in temperature and medium density, resulting in poor measurement accuracy. The user has been looking for a long-term stable measurement instrument to replace the differential pressure level gauge. After trial installation of a DHE G80 FMCW radar level gauge, the instrument performed stably and measured accurately, which has been recognized by the user. After the trial, the user purchased more than 40 DHE G80 FMCW radar level gauges for liquid level measurement of other tanks in the factory.

USERS' USAGE REPORTS

User list	
Nantong Jiangshan Agrochemical & Chemicals Limited Liability Co., Ltd.	Harbin Songyuan Aipu Technology Co., Ltd. / Huadian Jiamusi Power Plant
Chengdu Southern Electronic (Securest) Instrument Co., Ltd.	Ningxia Kerida Petrochemical Co., Ltd.
Sichuan New Torch Chemical Co., Ltd.	South China Yunnan Branch of National Petroleum and Natural Gas Pipeline Network Group Co., Ltd.
Hubei Jinyang Metallurgical Incorporated Co., Ltd.	South China Branch of National Petroleum and Natural Gas Pipeline Network Group Co., Ltd.
Huizhou Dong Jiang Veolia Enironmental Services Co.,Ltd.	Chongqing Light Industry Chemical Co., Ltd.
Xinjiang Tianyun Chemical Co., Ltd.	Ningxia Zhihua Automation Technology Service Co., Ltd.
Zhejiang Xinfengming Chemical Fiber Co., Ltd.	BYK Additives (Shanghai) Co., Ltd.
Mianyang Heze Chemical Co., Ltd.	Xinxiang Xihuan Zhongyou Sales Co., Ltd.
Shanghai Yinuo Automation Engineering Co., Ltd. / Jiuquan Tongfu Hongda Oil Storage Co., Ltd.	PetroChina Daqing Petrochemical Branch
Ningxia Zhongsheng Petrochemical Co., Ltd.	Maoming Shihua Dongcheng Chemical Industry Co., Ltd.
Sichuan Chongqing Oil Transportation Department of South China Branch of National Pipeline Network Group	Hangzhou Water Treatment Technology Development Center Co., Ltd.
Winsway Energy (Nantong) Co., Ltd.	Rizhao Joylegend Petrochemical Co., Ltd.
Shanxi Longtongying Trading Co., Ltd. / Shanxi Longzhi Energy Chemical Co., Ltd.	Shandong Hengzheng New Materials Co., Ltd.
Ningxia Shangneng Petrochemical Co., Ltd.	Shaanxi Kelida Science and Technology Industry Development Co., Ltd.
Baiyin Xintian Chemical Branch of Gansu Liuhua (Group) Co., Ltd.	Sinochem Zhuhai Petrochemical Terminal Co., Ltd.
Wuheng Chemical Co., Ltd.	Panjin Xinbailian Automatic Control Co., Ltd.
Weifang Dianwei Automation Equipment Co., Ltd. / Yumen Shangneng Technology Co., Ltd.	Chongqing Light Industry and Chemical Co., Ltd. 601 Division
Gansu West Huaqi Material Technology Co., Ltd.	China Petroleum and Chemical Corporation South China Branch
Jiaozuo Huachen Chemical Technology Co., Ltd.	Guangdong Gangjian Liqueiled Gas Ltd.
Zhongxian Huaxiang Salt Chemical Industry Co., Ltd.	Guangzhou Haohua Chemical Engineering Co., Ltd.
Shandong Kaisheng New Materials Co., Ltd.	Jiangmen Xinhui District Da'ao Jiahua Oil-Gas Co., Ltd.
Yichang Xinyangfeng Fertilizer Industry Co., Ltd	Kunshan Shangde Electromechanical Engineering Co., Ltd. / Zhejiang Wuchan Gangzhou Petrochemical Co., Ltd.
Suzhou COFCO Biochemical Co., Ltd.	Zhejiang Shang'an Construction Co., Ltd. / Ningxia Chichuang Trading Co., Ltd. Benefiting-agriculture Oil Depot
Shandong Daokedao Technology Development Co., Ltd.	Dongying Ke Li Chemical Co., Ltd.
Guangxi Jinchuan Nonferrous Metals Co., Ltd.	Ningxia Taiyou Energy Co., Ltd
Shandong Tongxin Pharmaceutical Co., Ltd.	Ningxia Qinghua Coal Chemical Group Co., Ltd.
Taixing Xie Lianzhongda Chemical Co., Ltd.	Zhonghai Petroleum Tianye Chemical Co., Ltd.
Hubei Jingxing Measurement and Control Co., Ltd. / Hubei Kesai Chemical Co., Ltd.	Shaanxi Zhongrun New Energy Co., Ltd.
Cambridge Environmental Technology (Beijing) Co., Ltd.	INNER MONGOLIA Qinghua Group Qinghua Coal Chemical Co., Ltd.
Xinxiang Boyuan Biotechnology Co., Ltd.	PetroChina Liaoyang Petrochemical Company
Sichuan Jianyang Chuankong General Machinery Equipment Co., Ltd.	Beijing Time Domain Intelligent Control Technology Co., Ltd.
Zhoushan Century Pacific Chemical Co., Ltd.	Inner Mongolia Ligang Technology Co., Ltd.
Xi An Youlian Automtion Equipment Co., Ltd.	Inner Mongolia Lisha Technology Co., Ltd.
Jincheng Derui Electromechanical Equipment Co., Ltd.	Binzhou Dayou New Energy Development Co., Ltd.
Inner Mongolia Yuanji Chemical Co., Ltd.	Shandong Xinhua Pharmaceutical Company Limited
Hubei Kesai Chemical Co., Ltd.	Inner Mongolia Yuanji Chemical Co., Ltd.
Xiangfan Kewei Electrical Co., Ltd.	Shaanxi Jingyi Chemical Co., Ltd.
Dalian Institute of Chemical Physics, Chinese Academy of Sciences	Changzhi Huojia Industrial Co., Ltd.
Lanzhou Huichen Electromechanical Equipment Co., Ltd.	Zhejiang Lianhui New Material Co., Ltd.
Xingtai Xiangan Metallurgical Burden Sales Co., Ltd. / Xingtai Maoxin Chemical Products Co., Ltd.	Jiangsu Tianyuan Chemical Co., Ltd.
Shandong Puntium Paint Co., Ltd.	Weifang Kaisheng New Material Co., Ltd.
Ningxia Wynca Technology Co., Ltd.	Zhejiang Jinguang Industrial Co., Ltd.
Gansu Baillian Chemical Co., Ltd.	Rizhao Guoen Chemical Co., Ltd.
Xinjiang Jinmaoxin Energy Co., Ltd.	Chongqing Fuyuan Chemical Co., Ltd.
Shandong PROVINCE Yuexing Chemical Co., Ltd.	Haohua Gas Co., Ltd.
Ningxia Tongde Love Recycling Energy Technology Co., Ltd.	Xinhua Pharmaceutical (Shouguang) Co., Ltd.
Sinochem (Ningbo) Ro Memtech Co., Ltd.	Qinzhou Tianheng Petrochemical Co., Ltd.
Sinochem (Ningbo) Ro Memtech Co., Ltd.	Panjin Xinbailian Automatic Control Co., Ltd. / Panjin Haoyuan Petrochemical Co., Ltd.