苏州兰旺克电气设备有限公司
Suzhou Lanwangke Electrical Equipment Co., Ltd

驱动器规格书 The specification of the CONTROLLER	规格书编号： Specification No.	P560-220V-600W-W-FOC
	发布日期： Date Issued	2023-9-1





产品主型号Main model name：	P560-220V-600W
驱动器型号Subdivision of Drive Models:	220V-600W-W-FOC

说明书组成内容/Composition of the instruction manual	
要求和变更/REQUESTS &REVISION RECORDS	√
电气规格/TECH SPECIFIICATIONS	√
PCB安装尺寸/PCB DRAWING	√
散热片尺寸/HEAT SINK SIZE	√
端子说明/PIN INSTRUCTION	√
控制方法/ CONTROL INSTRUCTION	√
故障表达和定义/FAULT EXPRESSION AND DEFINITION	√
	共计 (TOTAL without Cover) _____ 页
编写人-Writer	邓军
审核人-Auditor	张俊

生产商/Manufacture: 苏州兰旺克电气设备有限公司 Suzhou Lanwangke Electrical Equipment Co., Ltd

网址/Web: www.dccmotor.com

地址/Add: 苏州市相城区黄埭东桥聚民路15号

No. 15 Jumin Road, Huangdai East Bridge, Xiangcheng District, Suzhou City 215000

文档内所有数据均在额定电压下测量，在25°C环境温度和1.2 kg/m3标准空气密度下有效。列出的值是标称值，可能会根据安装条件和部件公差而变化。
参阅规定的最大额定值。超出正常工作范围的性能数据仅供参考.

Stated all data are measured at nominal voltage and are valid at 25 °C ambient temperature and 1.2 kg/m3 standard air density. Values listed are nominal and can vary depending on the installation conditions and due to component tolerances. Performance data outside normal operating range plotted for information only.

基础电气规格	Basic Tech specification	220VAC-600W-W	
		单位（Unit）	数据（Data）
额定电压	Rate voltage	VAC	220
额定电流	Rate current	A	2
额定功率	Power consumption	W	450
转速范围	Speed range	rpm	3000-61000
建议电压范围	Voltage range	VAC	180-240
极限电压	Limited voltage	VAC	260
最大可持续电流	Max current	A	2.5
响应时间	Response time	ms	200
霍尔信息	Hall information		/
适配磁铁极数	Adaptive magnet poles		2
PCB重量	PCB Weight	g	120
使用环境温度范围	Operating ambient temperature range	℃	{-20，55}
使用环境湿度范围	Operating environment humidity range	%RH	＜95
建议储存温度范围	Recommended storage temperature range	℃	{-20，55}
驱动方式	**Driving method**		**方波 Square**
调速方式	**Speed control mode**		**0-5V PWM**

注意事项 Notice

*接入电线前请仔细阅读规格书，查看端子说明，不能接错线。

*Before connecting the wires, please carefully read the specifications and check the terminal instructions, and do not connect the wrong wires.

* 运行期间严禁打开外壳测量或触摸底板上任何器件和接插件。

*During operation, it is strictly prohibited to open the casing for measurement or touching any electronic elements on the bottom PCB

* 断电后1分钟后才能进行底板检查或更换保险管。

*Pls 1 minute after the power outage can the bottom plate be inspected or the safety tube be replaced.

* 运行期间尽量使用驱动器金属外壳帮助驱动器散热。

*During operation, try to use the metal casing of the drive to help dissipate heat.

* 110VAC-220VAC无刷电机驱动器和310VDC无刷电机需良好可靠接地,否则有可能无刷电机转速不平稳。

*The 110VAC-220VAC brush motor driver and the 310VDC brushless motor need to be well and reliably grounded, otherwise there is a possibility of unstable speed of the BLDC MOTOR

* 如果驱动器在运行期间意外损坏，本公司只负责承担驱动器在保修范围内的维修和更换。
本公司不承担由于驱动器意外损坏导致的电机失控或人员伤亡以及财产损失等的赔偿。

*If the drive is accidentally damaged during operation, our company is only responsible for repairing and replacing the drive within the warranty scope.
Our company shall not be liable for compensation for motor loss of control, personal injury, or property damage caused by accidental damage to the drive.

PCB尺寸图（PCB DRAWING）

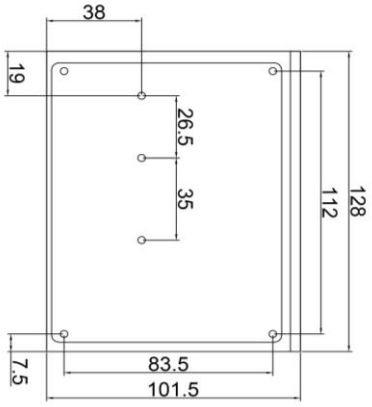

散热机壳尺寸图（ HEAT SINK DRAWING）

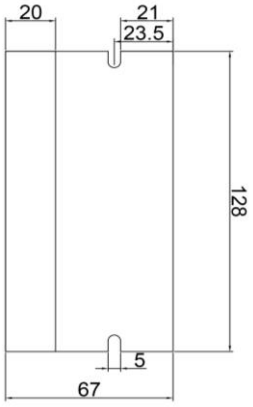

接口定义（CONNECTOR DENTIFICATION）

接口说明 Connector instruction	端子型号 Connector model	PIN序号 P/N	PIN定义 Pin Definition		使用说明 Use instructions
电源接口 Power connector	VH3.96-5P	PE	电源地线		
		AC_L	220VAC输入		
		AC_N	220VAC输入		
电机接口 Motor connector	VH3.96-7P	PE	地线		
		U	电机U相		
		V	电机V相		
		W	电机W相		
控制信号接口 Control connector	XHB2.54-6P	+5V	+5V控制电源正极	+5V	配合B10K电位器使用+5V,VSR和GND，也可直接配合VSR实现开机全速. Use+5V, VSR, and GND in conjunction with B10K Potentiometer, Or directly cooperate with VSR to achieve full startup speed.
		VSR	调速信号输入	Input speed control signal	接受调速电压0-5V（0.20V启动） PWM脉冲调速（频率：10KHz，电压：+5V，占空比：0-100%） Accepting speed regulation voltage 0-5V (starting at 0.20V) PWM pulse speed regulation (Frequency: 10KHz, voltage:+5V, duty cycle: 0-100%)
		GND	控制信号电源负极	Negative of signal control	控制信号负极，可配合VSR ,EN使用 Negative of signal control can be used in conjunction with VSR and EN
		EN	启动和停止	Start and stop control	EN引脚配合GND在驱动器持续接受调速信号时，可控制启动和停止。 连接GND时，停止。 断开GND时，运行。 The EN pin, in conjunction with GND, can control start and stop when the driver continuously receives a speed control signal. Connecting to GND--------Stop. Disconnecting GND--------Run.
		悬空	引脚为空	/	暂无功能,可定制成正反转功能 No function so far，Customizable with forward and reverse functions
		FG	速度信号输出	Output frequency	**电机速度脉冲输出，用于转速计算** 当极对数为P时，每转一圈输出P个脉冲。 电机转速（rpm)=输出脉冲频率(Hz）*60/极对数 **Motor speed pulse output for speed calculation** When the number of poles is P, P pulses are output per revolution. Motor speed=output pulse frequency * 60/number of pole pairs

控制接线图示（CONTROL DRAWING）

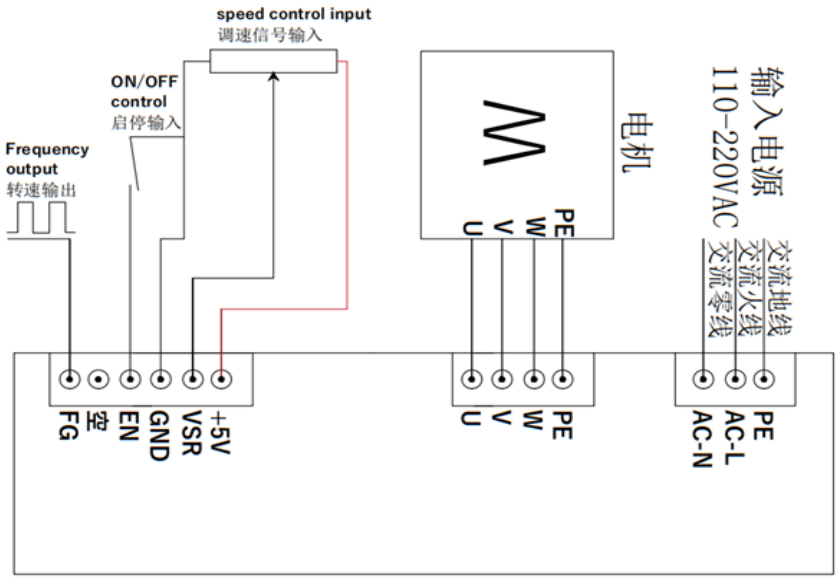

故障定义（FAULT DEFINITION）

闪灯次数 Number of flashes	闪灯意义	Meaning of flashing lights
1	运行	每300ms闪一次
2	堵转报警	闪2次后间隔4S左右再继续闪2次
3	均值电流报警	闪3次后间隔3.6S左右再继续闪3次
4	峰值电流报警	闪4次后间隔3.2S左右再继续闪4次
5	欠压报警	闪5次后间隔2.8S左右再继续闪5次
6	过压报警	闪6次后间隔2.4S左右再继续闪6次
7	过热报警	闪7次后间隔2S左右再继续闪7次
8		