苏州兰旺克电气设备有限公司
Suzhou Lanwangke Electrical Equipment Co., Ltd

鼓风机规格书 **The specification of the Radial blower**	规格书编号： Specification No.	P560-48V-11A-30cm
	发布日期： Date Issued	2022/5/10





产品主型号Main model name:	**P560-48V**
匹配驱动器型号Matching drive model:	**48VDC-600W-W**

说明书组成内容/Composition of the instruction manual	
要求和变更/REQUESTS &REVISION RECORDS	√
电气规格/TECH SPECIFIICATIONS	√
曲线图/CURVES AND CHARACTERISTICS	√
外形图/OUTLINE DRAWING	√
电控规格书/PCB control	
	共计 (TOTAL without Cover) 5 页
编写人-Writer	**邓军**
审核人-Auditor	**张俊**

生产商/Manufacture: **苏州兰旺克电气设备有限公司 Suzhou Lanwangke Electrical Equipment Co., Ltd**

网址/Web: **www.dccmotor.com**

地址/Add: **苏州市相城区黄埭东桥聚民路15号**

No. 15 Jumin Road, Huangdai East Bridge, Xiangcheng District, Suzhou City 215000

文档内所有数据均在额定电压下测量，在25°C环境温度和1.2 kg/m3标准空气密度下有效。列出的值是标称值，可能会根据安装条件和部件公差而变化。根据ISO5801标准，采用标准化入口和出口室进行测试。公差基于ISO13348规定的速度数据，等级4：压力+/-10%，功率+16%。基于恒定电压的公差：速度+/-10%，压力+/-21%，功率+33%。关于鼓风机的连续运行，请参阅规定的最大额定值。超出正常工作范围的性能数据仅供参考.

Stated all data are measured at nominal voltage and are valid at 25 °C ambient temperature and 1.2 kg/m3 standard air density. Values listed are nominal and can vary depending on the installation conditions and due to component tolerances. Test setup according to ISO 5801 with standardized inlet and outlet chambers. Tolerances based on specified speed data according to ISO 13348, grade 4: pressure +/-10 %, power +16 %. Tolerances based on constant voltage: speed +/-10 %, pressure +/-21 %, power +33 %. For continuous blower operation please refer to specified maximum ratings. Performance data outside normal operating range plotted for information only.

特殊要求+变更记录
Special requirements+Change records

特殊要求 **special requirements**	

变更要求 **Change request**	**变更日期** **Change date**	**变更理由** **Change reasone**	**实施日期及订单批次** **Implementation date and order batch**

基础电气规格（Basic Tech specification）		P560-48V-11A	
最大持续运行状态	**Maximum continuous operating state**	单位（Unit）	数据（Data）
额定电压	Rate voltage	VDC	48
额定电流	Rate current	A	11
额定功耗	Power consumption	W	528
空载转速	Free blowing speed	rpm	54000
最大风压(流量=0)	Max air pressure (Flow=0)	kpa	25
最大风压时功率	Power @maximum pressure	W	211
最大风压时转速	Speed @maximum pressure	rpm	63000
最大流量(风压=0)	Max air Flow(Pressure=0)	L/min	1200
最大流量时功率	Power @max flow	W	518
最大流量时转速	Speed @max flow	rpm	56000
最小流量	Min air flow	L/min	50
无刷直流电机参数	**BLDC Motor parameters**		
电阻值	Resistance	mΩ	78.5
电感值	Inductance value	mH	267
转子惯量	Rotor inertia	g/cm^2	6.17
霍尔信息	Hall information		N/A
磁铁极数	Number of magnet poles		2
绕组绝缘等级	Winding insulation level		180℃-H
电机表面温升	Motor surface temperature rise	℃	45
IP等级	IP level		IP54
叶轮材质	Impeller material		AL
机壳材质	House casing material		PA66-V0+AL
氧气兼容	Oxygen compatible	%	21
是否符合生物兼容	Biocompatibility		Yes
风机整体性能	**Performance of blower**		
NTC情况	NTC situation		N/A
整机重量	Weight	g	570
使用寿命[1]	Operation Life	Hours	25000
噪音等级[2]	Noise	dB(A)	45
泄压情况	Pressure relief situation	kpa	>30
叶轮旋转方向(进风口看叶轮)	Impeller rotation（see from air inlet)		逆时针 CCW
使用环境温度范围	Operating ambient temperature range		{-10，60}
使用环境湿度范围	Operating environment humidity range		{10，75}
建议储存温度范围	Recommended storage temperature range		{-10，40}

注意事项 Notice:

1, 进风口或者出风口负载的管路管径不得小于6mm

The pipeline diameter of the air inlet or outlet load shall not be less than 6mm

2, 禁止进风口或者出风口全堵超过3分钟

Do not block the air inlet or outlet completely for more than 3 minutes

1，Accelerated aging test at 45 °C ambient temperature, continuous operation, flow control with 4.5 mm diameter orifice plate at outlet

在45°C环境温度下进行加速老化试验，连续运行，出口采用直径为6 mm的孔板进行流量控制。

2，Measured at distance of 1 meter from inlet,inle open, outlet connected to breathing tube and 4 mm orifice in sound cancellation box at 1 kPa.

在距离入口1米处测量，进风口全开。出风口连接软管，软管尾端带4 mm孔板，此时风机运行1 kPa。

风压风量曲线图（Pressure&Flow CURVES AND CHARACTERISTICS）

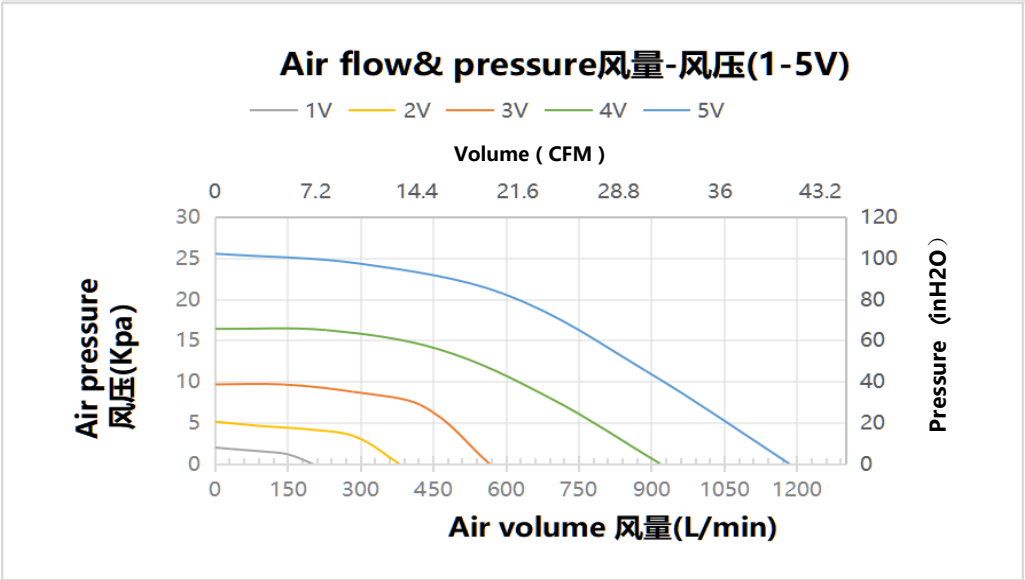

转速，功率VS流量图曲线图（Speed and Power vs. Flow Characteristics）

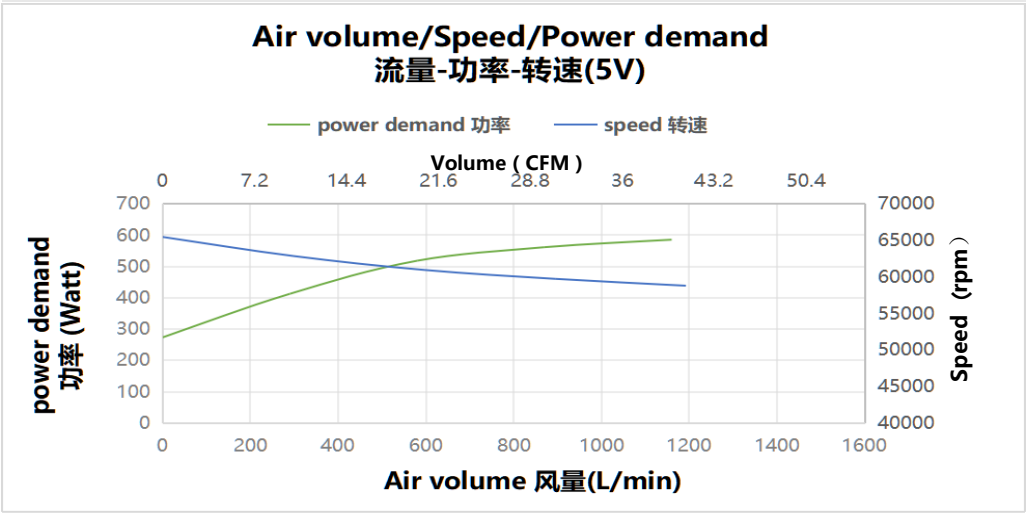

尺寸图（OUTLINE DRAWING）

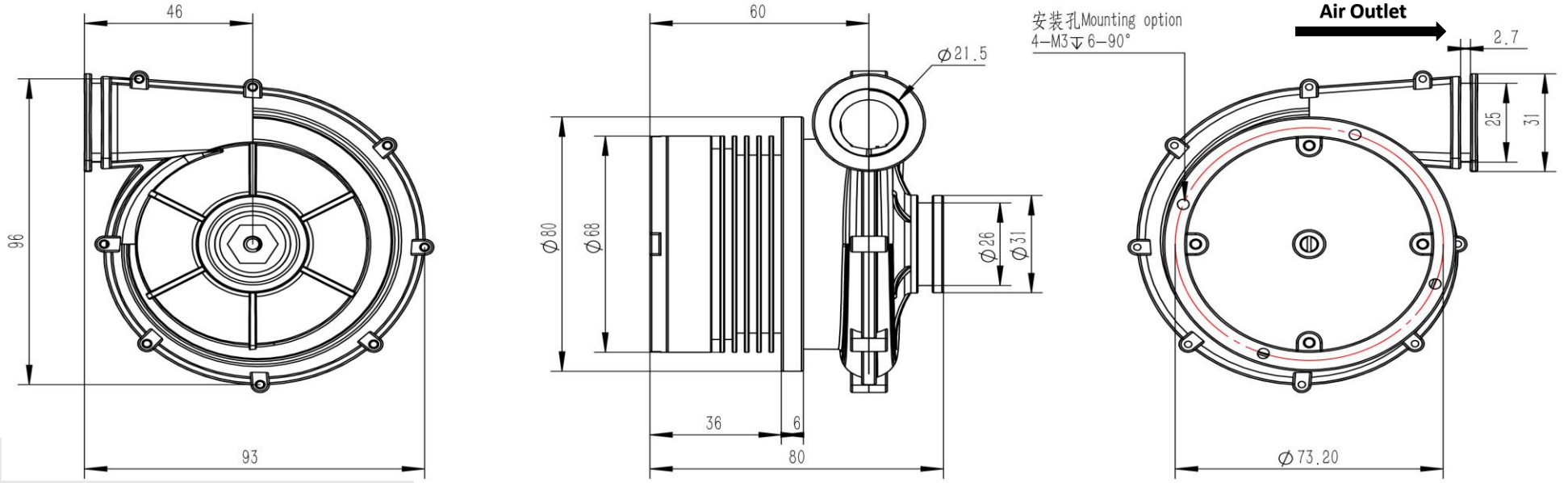

端子照片	线序说明	颜色		引线说明	线材规格	胶壳型号	端子型号	出线长度 (不含端子)	备注
Connector Picture	Line sequence	Color		Wire Description	Wire specification	Rubber shell model	Terminal model	Wire length (Excluding terminals)	Remark
	1	白	white	U	UL3239 -18AWG	Amass MR30-FB.G	H59-1	30cm	φ9mm Heat Shrink Tube L: 10cm
	2	蓝	blue	V					
	3	黄	yellow	W					