# 苏州兰旺克电气设备有限公司
# Suzhou Lanwangke Electrical Equipment Co., Ltd

| | | |
|---|---|---|
| **驱动器规格书**<br>**The specification of the CONTROLLER** | 规格书编号：<br>SpecificationNo. | **LWK7652-12V-200W** |
| | | |
| | 发布日期：<br>Date Issued | **2023/11/10** |

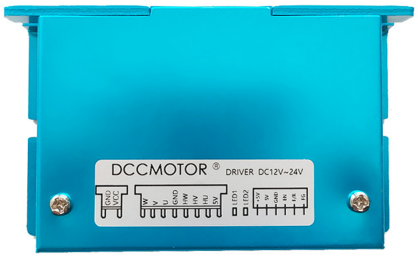


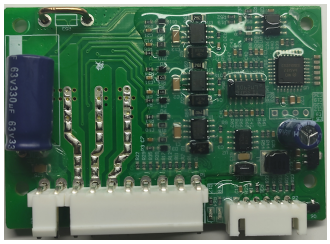

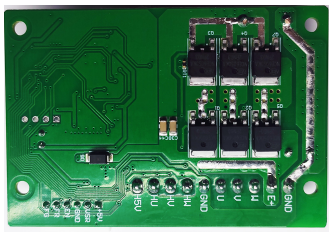

| | |
|---|---|
| **产品主型号Main model name:** | **LWK7652-12V-200W** |
| **细分驱动器型号Subdivision of Drive Models:** | **12V-200W** |

| **说明书组成内容/Composition of the instruction manual** | |
|---|---|
| **要求和变更/REQUESTS &REVISION RECORDS** | √ |
| **电气规格/TECH SPECIFIICATIONS** | √ |
| **PCB安装尺寸/PCB DRAWING** | √ |
| **散热片尺寸/HEAT SINK SIZE** | √ |
| **端子说明/PIN INSTRUCTION** | √ |
| **控制方法/ CONTROL INSTRUCTION** | √ |
| **故障表达和定义/FAULT EXPRESSION AND DEFINITION** | √ |
| | **共计 ( TOTAL without Cover) _____ 页** |
| **编写人-Writer** | **邓军** |
| **审核人-Auditor** | **张俊** |


**生产商/Manufacture:** **苏州兰旺克电气设备有限公司 Suzhou Lanwangke Electrical Equipment Co., Ltd**

**网址/Web:** **国际：www.dccmotor.com 国内：www.dccmotor.cn**

**地址/Add:** **苏州市相城区黄埭东桥聚民路15-106号**
**15-106 Jumin Road, Huangdai East Bridge, Xiangcheng District, Suzhou City**


文档内所有数据均在额定电压下测量，在25°C环境温度和1.2 kg/m3标准空气密度下有效。列出的值是标称值，可能会根据安装条件和部件公差而变化。
参阅规定的最大额定值。超出正常工作范围的性能数据仅供参考.

Stated all data are measured at nominal voltage and are valid at 25 °C ambient temperature and 1.2 kg/m3 standard air density. Values listed are nominal and can vary depending on the installation conditions and due to component tolerances. Performance data outside normal operating range plotted for information only.

| 基础电气规格 | Basic Tech specification | LWK7652-12V-200W | |
|---|---|---|---|
| | | 单位（Unit） | 数据（Data） |
| 额定电压 | Rate voltage | V | 12 |
| 额定电流 | Rate current | A | 11 |
| 额定功率 | Power consumption | W | 130 |
| 转速范围 | Speed range | rpm | 50000 |
| 建议电压范围 | Operate voltage range | V | 9.5-14.5 |
| 极限电压 | Limited voltage | V | 15 |
| 最大可持续电流 | Max current | A | 16.5 |
| 响应时间（0-全速） | Response time（0-Max speed） | ms | 2000 |
| 霍尔信息 | Hall information | | 120° |
| 适配磁铁极数 | Adaptive magnet poles | | 4 |
| PCB重量 | PCB Weight | g | 45 |
| 使用环境温度范围 | Operating ambient temperature range | ℃ | {-20，50} |
| 使用环境湿度范围 | Operating environment humidity range | %RH | {30，90} |
| 建议储存温度范围 | Recommended storage temperature range | ℃ | {-30，80} |
| **驱动方式** | **Driving method** | | **方波 Square** |
| **调速方式** | **Speed control mode** | | **0-5V PWM** |

## 注意事项 Notice

*接入电线前请仔细阅读规格书，查看端子说明，不能接错线。

*Before connecting the wires, please carefully read the specifications and check the terminal instructions, and do not connect the wrong wires.

* 运行期间严禁打开外壳测量或触摸底板上任何器件和接插件。

*During operation, it is strictly prohibited to open the casing for measurement or touching any electronic elements on the bottom PCB

* 断电后1分钟后才能进行底板检查或更换保险管。

*Pls 1 minute after the power outage can the bottom plate be inspected or the safety tube be replaced.

* 运行期间尽量使用驱动器金属外壳帮助驱动器散热。

*During operation, try to use the metal casing of the drive to help dissipate heat.

* 110V-220V刷电机驱动器和310V无刷电机需良好可靠接地,否则有可能无刷电机转速不平稳。

*The 110V-220V brush motor driver and the 310V brushless motor need to be well and reliably grounded, otherwise there is a possibility of unstable speed of the BLDC MOTOR

* 如果驱动器在运行期间意外损坏，本公司只负责承担驱动器在保修范围内的维修和更换。
本公司不承担由于驱动器意外损坏导致的电机失控或人员伤亡以及财产损失等的赔偿。

*If the drive is accidentally damaged during operation, our company is only responsible for repairing and replacing the drive within the warranty scope.
Our company shall not be liable for compensation for motor loss of control, personal injury, or property damage caused by accidental damage to the drive.

PCB尺寸图（PCB DRAWING）

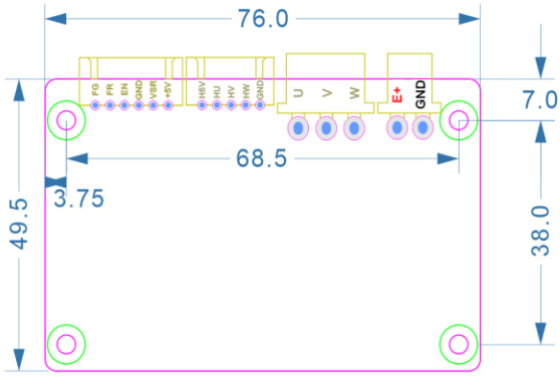


散热片尺寸图（Casing DRAWING）

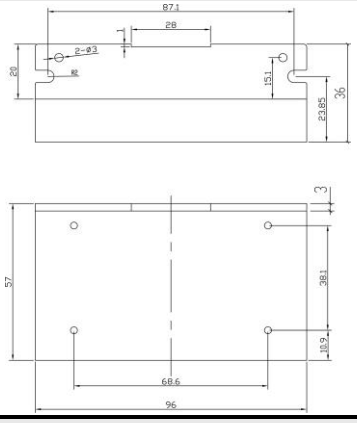


接口定义（CONNECTOR DENTIFICATION）

| 接口说明<br>Connector instruction | 端子型号<br>Connector model | PIN序号<br>P/N | PIN定义<br>Pin Definition | | 使用说明<br>Use instructions |
|---|---|---|---|---|---|
| 电源接口<br>Power connector | XT30PW30-F<br>外配：XT30U-M | GND | 电源负极 | | 12V - |
| | | E+ | 电源正极 | | 12V + |
| 电机接口<br>Motor connector | HA2.54-5WA<br>外配HA2.54-5Y | H5V | 霍尔供电5V | | |
| | | HU | 霍尔U相 | | |
| | | HV | 霍尔V相 | | |
| | | HW | 霍尔W相 | | |
| | | GND | 霍尔负极 | | |
| | MR30PW30-F<br>外配：MR30-M | U | 电机U相 | | |
| | | V | 电机V相 | | |
| | | W | 电机W相 | | |
| 控制信号接口<br>Control connector | HA2.54-6WA<br>外配:HA2.54-6Y | +5V | +5V控制电源正极 | +5V | 配合B10K电位器使用+5V,VSR和GND，也可直接配合VSR实现开机全速.<br>Use+5V, VSR, and GND in conjunction with B10K Potentiometer,<br>Or directly cooperate with VSR to achieve full startup speed. |
| | | VSR | 调速信号输入 | Input speed control signal | 接受调速电压0-5V（0.25V启动）<br>PWM脉冲调速（频率：10KHz，电压：+5V，占空比：0-100%）<br>Accepting speed regulation voltage 0-5V (starting at 0.25V)<br>PWM pulse speed regulation<br>(Frequency: 10KHz, voltage:+5V, duty cycle: 0-100%) |
| | | GND | 控制信号电源负极 | Negative of signal control | 控制信号负极，可配合VSR ,EN使用<br>Negative of signal control can be used in conjunction with VSR and EN |
| | | EN | 启动和停止 | Start and stop control | EN引脚配合GND在驱动器持续接受调速信号时，可控制启动和停止。<br>连接GND时，停止。<br>断开GND时，运行。<br>The EN pin, in conjunction with GND, can control start and stop when the driver continuously receives a speed control signal.<br>Connecting to GND--------Stop.<br>Disconnecting GND--------Run. |
| | | 悬空 | 引脚为空 | / | 暂无功能,可定制成正反转功能<br>No function so far，Customizable with forward and reverse functions |
| | | FG | 速度信号输出 | Output frequency | **电机速度脉冲输出，用于转速计算**<br>当极对数为P时，每转一圈输出P个脉冲。<br>电机转速（rpm)=输出脉冲频率(Hz）*60/极对数<br>**Motor speed pulse output for speed calculation**<br>When the number of poles is P, P pulses are output per revolution.<br>Motor speed=output pulse frequency * 60/number of pole pairs |

## 控制接线图示（CONTROL DRAWING）

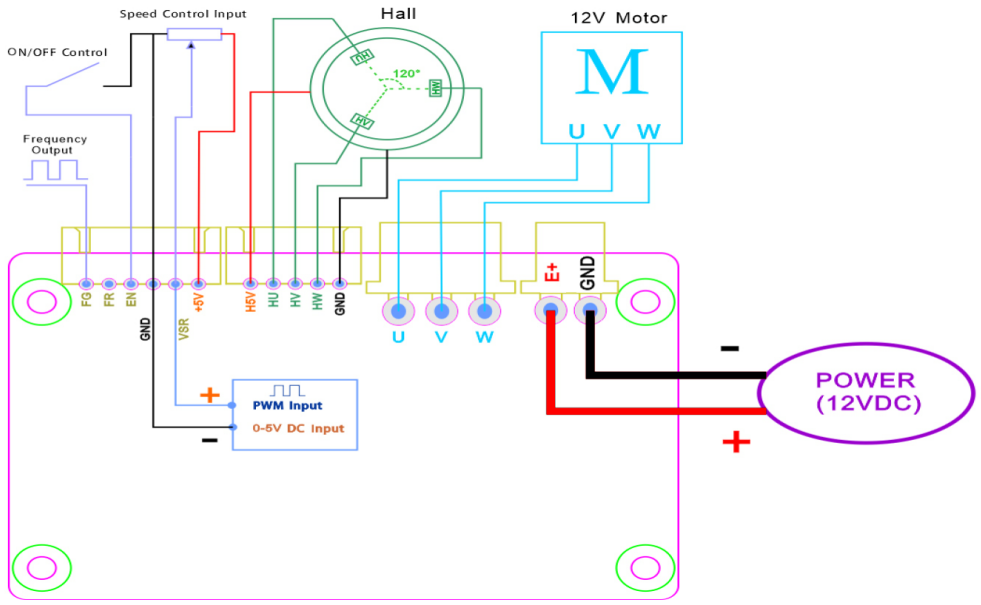


## 故障定义（FAULT DEFINITION）

| 闪灯次数<br>Number of flashes | 闪灯意义 | Meaning of flashing lights |
|---|---|---|
| 1 | 霍尔故障保护<br>(霍尔损坏或接触不良) | Hall fault protection<br>(Hall damaged or poor contact) |
| 2 | 堵转保护<br>(转速低于400rpm持续1s以上) | Locked rotor protection<br>(Speed below 400rpm more than 1 s) |
| 3 | 过压保护<br>(输入电压大于16±0.5V持续1s以上) | Overvoltage protection<br>(Input voltage greater than 16 ± 0.5V more than 1 s) |
| 4 | 软件过流保护<br>(软件电流检测高于18±0.5A持续1s以上) | Software overcurrent protection<br>(Software current detection above 18 ± 0.5A more than 1 s) |
| 5 | 硬件过流保护<br>(输出短路) | Hardware overcurrent protection<br>(Output short circuit) |
| 6 | 过温保护<br>(温度高于85℃持续1s以上) | Over temperature protection<br>(Temperature above 85 ℃ for more than 1 s) |

注：驱动器检测到异常状态触发保护时，会在3S后再次尝试启动，当驱动器在触发保护后30s内，连续3次触发保护，驱动器会停止运行并报警指示，在排除异常后，需断电重启。

Note: When the driver detects an abnormal state and triggers the protection, it will try to start again after 3 seconds. When the driver triggers the protection three times in a row within 30 seconds after triggering the protection, the driver will stop running and give an alarm indication. After troubleshooting the abnormality, it needs to be powered off and restarted.