苏州兰旺克电气设备有限公司
Suzhou Lanwangke Electrical Equipment Co., Ltd

驱动器规格书 The specification of the CONTROLLER	规格书编号： Specification No.	LWK-C-100-68-24V-500W-W-CAN-FOC
	发布日期： Date Issued	2025/2/11



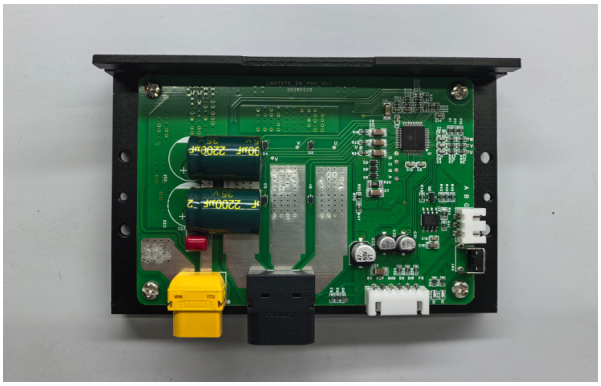

产品主型号Main model name:	LWK7575-24V-500W-485
细分驱动器型号Subdivision of Drive Models:	24V-500W-W-485-FOC

说明书组成内容/Composition of the instruction manual	
要求和变更/REQUESTS &REVISION RECORDS	√
电气规格/TECH SPECIFIICATIONS	√
PCB安装尺寸/PCB DRAWING	√
散热片尺寸/HEAT SINK SIZE	√
端子说明/PIN INSTRUCTION	√
控制方法/ CONTROL INSTRUCTION	√
故障表达和定义/FAULT EXPRESSION AND DEFINITION	√
	共计 (TOTAL without Cover) _____ 页
编写人-Writer	邓军
审核人-Auditor	张俊

生产商/Manufacture: 苏州兰旺克电气设备有限公司 Suzhou Lanwangke Electrical Equipment Co., Ltd

网址/Web: 国际：www.dccmotor.com 国内：www.dccmotor.cn

地址/Add: 苏州市相城区黄埭东桥聚民路15-106号
15-106 Jumin Road, Huangdai East Bridge, Xiangcheng District, Suzhou City

文档内所有数据均在额定电压下测量，在25°C环境温度和1.2 kg/m3标准空气密度下有效。列出的值是标称值，可能会根据安装条件和部件公差而变化。
参阅规定的最大额定值。超出正常工作范围的性能数据仅供参考.

Stated all data are measured at nominal voltage and are valid at 25 °C ambient temperature and 1.2 kg/m3 standard air density. Values listed are nominal and can vary depending on the installation conditions and due to component tolerances. Performance data outside normal operating range plotted for information only.

基础电气规格	Basic Tech specification	LWK7575-24V-500W-485	
		单位（Unit）	数据（Data）
额定电压	Rate voltage	V	24
额定电流	Rate current	A	22
额定功率	Power consumption	W	528
转速范围	Speed range	rpm	10000-120000
建议电压范围	Voltage range	V	12-27
极限电压	Limited voltage	V	31
最大可持续电流	Max current	A	25
响应时间	Response time	ms	2000ms
霍尔信息	Hall information		NC
适配磁铁极数	Adaptive magnet poles		1
冷却方式	Cooling method		Nature
PCB重量	PCB Weight	g	70
使用环境温度范围	Operating ambient temperature range	℃	{-20，55}
使用环境湿度范围	Operating environment humidity range	RH%	{30，90}
建议储存温度范围	Recommended storage temperature range	℃	{-10，40}
驱动方式	Driving method		FOC
调速方式	Speed control mode		1：0-5V PWM 2：485通讯

注意事项 Notice

*接入电线前请仔细阅读规格书，查看端子说明，不能接错线。

*Before connecting the wires, please carefully read the specifications and check the terminal instructions, and do not connect the wrong wires.

* 运行期间严禁打开外壳测量或触摸底板上任何器件和接插件。

*During operation, it is strictly prohibited to open the casing for measurement or touching any electronic elements on the bottom PCB

* 断电后1分钟后才能进行底板检查或更换保险管。

*Pls 1 minute after the power outage can the bottom plate be inspected or the safety tube be replaced.

* 运行期间尽量使用驱动器金属外壳帮助驱动器散热。

*During operation, try to use the metal casing of the drive to help dissipate heat.

* 110V-220V刷电机驱动器和310V无刷电机需良好可靠接地,否则有可能无刷电机转速不平稳。

*The 110V-220V brush motor driver and the 310V brushless motor need to be well and reliably grounded, otherwise there is a possibility of unstable speed of the BLDC MOTOR

* 如果驱动器在运行期间意外损坏，本公司只负责承担驱动器在保修范围内的维修和更换。
本公司不承担由于驱动器意外损坏导致的电机失控或人员伤亡以及财产损失等的赔偿。

*If the drive is accidentally damaged during operation, our company is only responsible for repairing and replacing the drive within the warranty scope.
Our company shall not be liable for compensation for motor loss of control, personal injury, or property damage caused by accidental damage to the drive.

PCB尺寸图（PCB DRAWING）

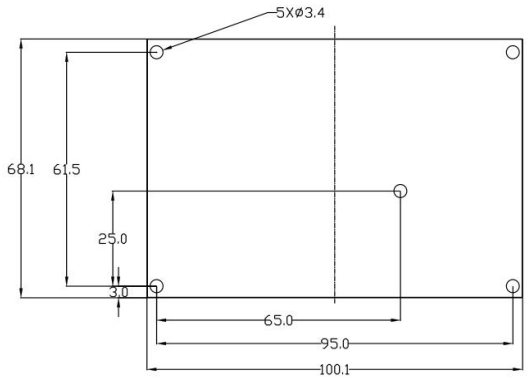

散热机壳尺寸图（ HEAT SINK DRAWING）

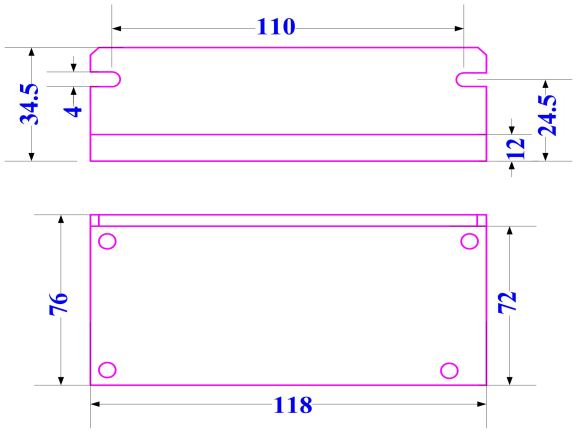

接口定义（CONNECTOR DENTIFICATION）

接口说明 Connector instruction	端子型号 Connector model	PIN序号 P/N	PIN定义 Pin Definition		使用说明 Use instructions
电源接口 Power connector	XT60PW-F20 外配：XT60H-M	正极	DC+		
		负极	DC-		
电机接口 Motor connector	MR60PW-M 外配：MR60-F	U	电机U相		
		V	电机V相		
		W	电机W相		
控制信号接口 Control connector	XHB2.54-6P	+5V	+5V控制电源正极	+5V	配合B10K电位器使用+5V,VSR和GND，也可直接配合VSR实现开机全速. Use+5V, VSR, and GND in conjunction with B10K Potentiometer, Or directly cooperate with VSR to achieve full startup speed.
		VSR	调速信号输入	Input speed control signal	接受调速电压0-5V（0.15V启动） PWM脉冲调速（频率：10KHz，电压：+5V，占空比：0-100%） Accepting speed regulation voltage 0-5V (starting at 0.15V) PWM pulse speed regulation (Frequency: 10KHz, voltage:+5V, duty cycle: 0-100%)
		GND	控制信号电源负极	Negative of signal control	控制信号负极，可配合VSR ,EN使用 Negative of signal control can be used in conjunction with VSR and EN
		EN	启动和停止	Start and stop control	EN引脚配合GND在驱动器持续接受调速信号时，可控制启动和停止。 连接GND时，停止。 断开GND时，运行。 The EN pin, in conjunction with GND, can control start and stop when the driver continuously receives a speed control signal. Connecting to GND--------Stop. Disconnecting GND--------Run.
		悬空	引脚为空	/	暂无功能,可定制成正反转功能 No function so far，Customizable with forward and reverse functions
		FG	速度信号输出	Output frequency	**电机速度脉冲输出，用于转速计算** 当极对数为P时，每转一圈输出P个脉冲。 电机转速（rpm）=输出脉冲频率（Hz）*60/极对数 **Motor speed pulse output for speed calculation** When the number of poles is P, P pulses are output per revolution. Motor speed=output pulse frequency * 60/number of pole pairs
控制信号接口 Control connector	XHB2.54-3P	485A	正端（+）		
		485B	负端（-）		
		GND	485GND		

控制接线图示（CONTROL DRAWING）	

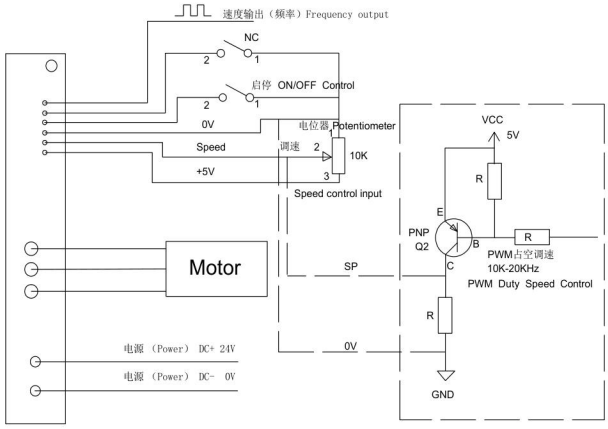

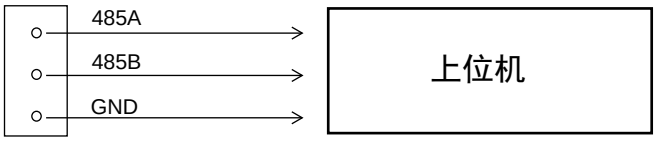

故障定义（FAULT DEFINITION）		
闪灯次数 **Number of LED flashes**	**闪灯意义**	**Meaning of flashing lights**
1	硬件过流保护 (mos短路或电流瞬间超过40A)	Hardware overcurrent protection (MOS short circuit or instantaneous current exceeding 40A)
2	过流保护方式 (电流超过35A,持续0.5s)	Overcurrent protection method (Current exceeds 35A for 0.5s)
3	过温保护 (温度持续超过85度，持续5s以上)	Over temperature protection (The temperature continues to exceed 85 degrees Celsius for more than 5s)
4	过压保护 (电压超过31.5V,持续1s以上)	Overvoltage protection (Voltage exceeds 31.5V for more than 1s)
5	欠压保护 (电压低于8V,持续0.5s以上)	Undervoltage protection (Voltage below 8V for more than 0.5s)
6	失速保护 (FOC估算速度异常，持续3s以上)	Stall protection (FOC estimation speed abnormal, lasting for more than 3s)
7	运行中被堵故障1 (未检测到电机速度，持续 1.5s以上	Blocked fault during operation (No motor speed detected, lasting for more than 1.5s)
8	缺相保护 (检测到UVW缺相)	Phase loss protection (UVW phase loss detected)

接口说明


DC24V 20A电源接
485通讯接口
485配对复位/按钮
UVW三相电机线接口
6PIN模拟量控制接口

485连接图：

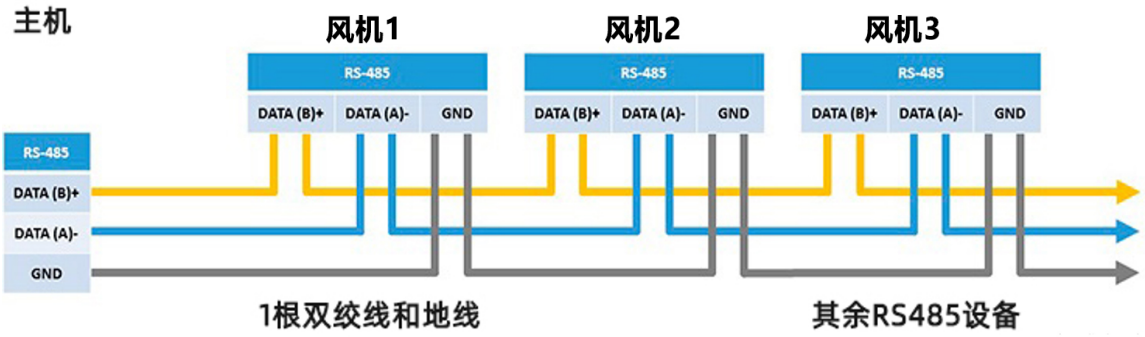
主机
风机1
风机2
风机3
RS-485
DATA (B)+
DATA (A)-
GND
1根双绞线和地线
其余RS485设备