YZF18系列电机（铝线电机）

金莱鼎 JinLaiDing

YZF18 SERIES MOTOR (ALUMINUM WIRE MOTOR)

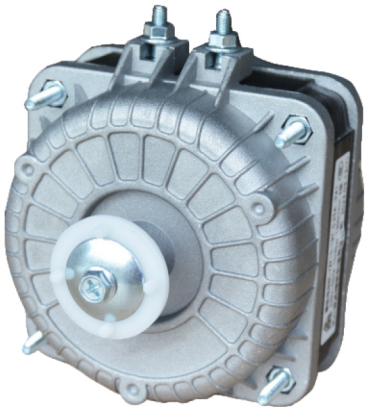

产品说明 Product description

1、本款YZF18系列电机绕组线圈采用铝漆包线生产，安装支架螺丝间距为18mm，规格齐全，和铜线电机相比，更具价格优势，性能基本和铜线电机一致;
2、本系列电机适用于冷柜、冰柜、酒柜、保鲜柜、冷凝器、蒸发器、散热器等制冷设备;
3、本系列电机的引出线规格及尺寸"L"可根据用户要求生产，接线端子可根据客户要求订做。

1. This YZF18 series motor winding coil is produced with aluminum enameled wire, with a mounting bracket screw spacing of 18mm and complete specifications. Compared with copper wire motors, it has a more price advantage, and its performance is basically the same as that of copper wire motors;
2. This series of motors is suitable for refrigeration equipment such as refrigerators, freezers, wine cabinets, fresh-keeping cabinets, condensers, evaporators, radiators, etc;
3. The specifications and size "L" of the outgoing wires of this series of motors can be produced according to user requirements, and the wiring terminals can be customized according to customer requirements.

使用说明

工作方式：S1　　绝缘等级：Class B
防护等级：IP41　　环境温度：-30°C~ +50°C

Instructions for Use

Operating mode: : S1 Insulation grade: : Class B
Protection Class: : IP41 Environmental Temperature: : -30°C~ +50°C

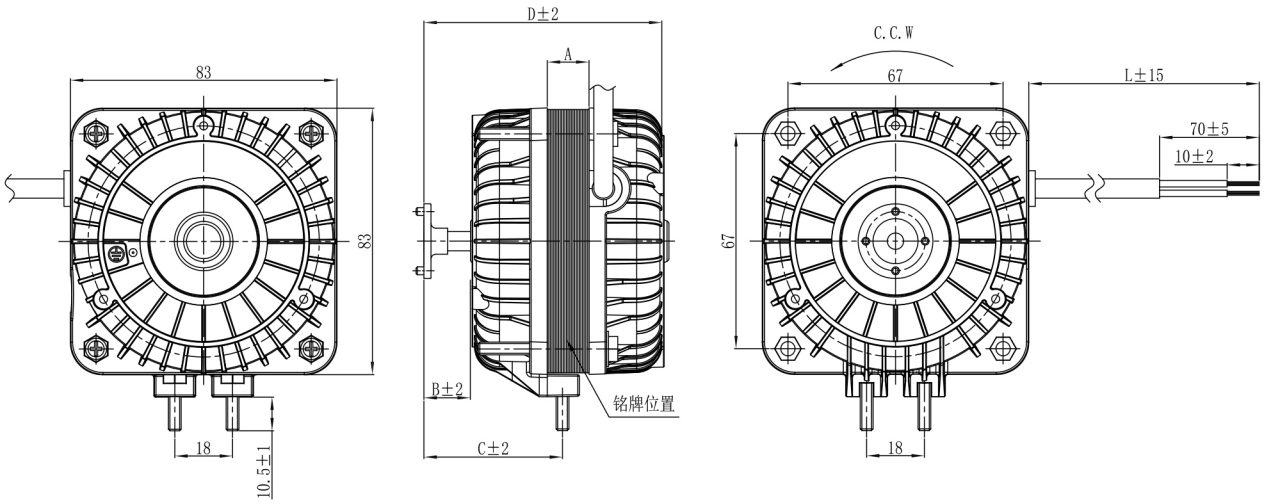

性能参数表 Performance parameter table

型号/TYPE	YZF3-13L		YZF5-13L		YZF10-20L		YZF16-25L	
额定电压/VOLTAGE V	220-240	110-120	220-240	110-120	220-240	110/120	220-240	110-120
额定频率/FREQUENCY Hz	50/60	60	50/60	60	50/60	60	50/60	60
输入功率/INPUT POWER W	25	25	35	35	40	40	60	60
输出功率/OUTPUT POWER W	3	3	3.5	3.5	8	8	13	13
额定电流/RATED CURRENT A	0.19	0.40	0.21	0.45	0.25	0.6	0.37	0.7
额定转速/RATED SPEED r/min	1300	1450	1300	1450	1300	1450	1300	1450
额定风量/AIR VOLUME m^3/h	455	510	455	510	645	790	780	900
A mm	13		13		19		25	
B mm	15		15		16		16	
C mm	45		45		46		46	
D mm	78		78		82		90	
风叶型号/FAN BLADE mm	Φ200		Φ200		Φ230		Φ250	
净重/WEIGHT kg	0.8		0.8		1.0		1.2	
每箱数量/QTY pcs	24		24		24		12	
LICENSE	CE CCC		CE CCC		CE CCC		CE CCC	

杭州莱鼎精密制造有限公司
Hangzhou Laiding Precision Manufacturing Co., Ltd
电话/Tel：0571-82428682
网址/Web：http://www.hzldjm.com