YZF26系列电机（双电压电机）

金莱鼎 JinLaiDing

YZF26 SERIES MOTOR (DUAL VOLTAGE MOTOR)

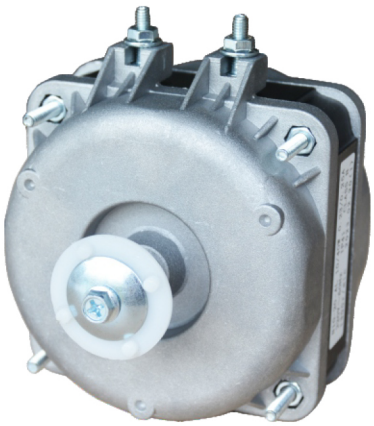

产品说明 Product description

1、本款YZF26系列双电压电机为出品外贸产品，额定电压为110/220V~60Hz，采用安装支架螺丝间距为26mm的光面端盖，绕组线圈可采用铜线或铝线生产，规格齐全，具有安全可靠、噪音低、振动小、寿命长等优点，深受广大外贸客户和外商的青睐;
2、本系列电机适用于冷柜、冰柜、酒柜、保鲜柜、冷凝器、蒸发器、散热器等制冷设备;
3、本系列电机的引出线规格及尺寸"L"可根据用户要求生产，接线端子可根据客户要求订做。

1. This YZF26 series dual voltage motor is a foreign trade product, with a rated voltage of 110/220V~60Hz. It adopts a smooth end cover with a mounting bracket screw spacing of 26mm. The winding coil can be produced using copper or aluminum wire, with complete specifications and advantages such as safety and reliability, low noise, low vibration, and long service life. It is highly favored by foreign trade customers and foreign businesses;
2. This series of motors is suitable for refrigeration equipment such as refrigerators, freezers, wine cabinets, fresh-keeping cabinets, condensers, evaporators, radiators, etc;
3. The specifications and size "L" of the outgoing wires of this series of motors can be produced according to user requirements, and the wiring terminals can be customized according to customer requirements.

使用说明

工作方式：S1　　绝缘等级：Class B
防护等级：IP41　　环境温度：-30°C~ +50°C

Instructions for Use

Operating mode: : S1 Insulation grade: : Class B
Protection Class: : IP41 Environmental Temperature: : -30°C~ +50°C

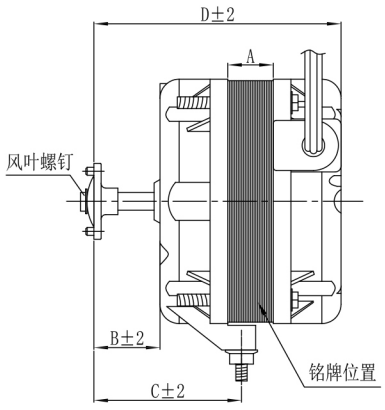

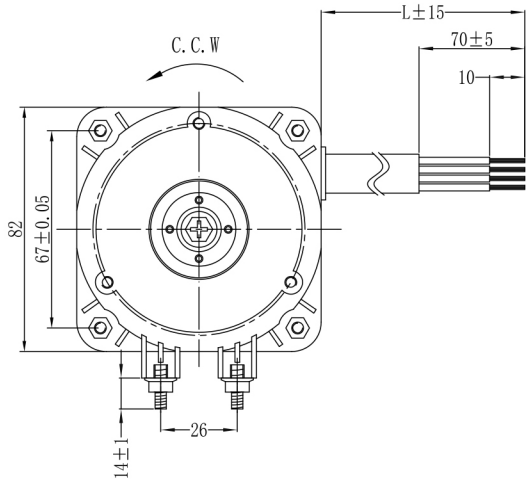

性能参数表 Performance parameter table

型号/TYPE	YZF5-13T		YZF10-20T		YZF16-25T		YZF20-30T		YZF25-40T		YZF34-45T	
额定电压/VOLTAGE V	220-240	110-120	220-240	110/120	220-240	110-120	220-240	110-120	220-240	110-120	220-240	110-120
额定频率/FREQUENCY Hz	60	60	60	60	60	60	60	60	60	60	60	60
输入功率/INPUT POWER W	35	35	40	40	60	60	75	75	90	90	110	110
输出功率/OUTPUT POWER W	5	5	10	10	16	16	20	20	25	25	34	34
额定电流/RATED CURRENT A	0.21	0.45	0.25	0.6	0.37	0.7	0.50	1.10	0.65	1.35	0.75	1.50
额定转速/RATED SPEED r/min	1450		1450		1450		1450		1450		1450	
额定风量/AIR VOLUME m^3/h	510		645		900		1050		1100		1210	
A mm	13		19		25		30		40		45	
B mm	18		19		19		18		18		18	
C mm	45		46		46		46		46		46	
D mm	78		84		90		92		102		106	
风叶型号/FAN BLADE mm	Φ200		Φ230		Φ250		Φ254		Φ300		Φ300	
净重/WEIGHT kg	0.8		1.1		1.3		1.5		1.8		2.1	
每箱数量/QTY pcs	20		20		12		12		12		12	
LICENSE	CE		CE		CE		CE		CE		CE	

杭州莱鼎精密制造有限公司
Hangzhou Laiding Precision Manufacturing Co., Ltd
电话/Tel：0571-82428682
网址/Web：http://www.hzldjm.com