金莱鼎
JinLaiDing

杭州莱鼎精密制造有限公司

Hangzhou Laiding Precision Manufacturing Co., Ltd

产品手册

Product brochure





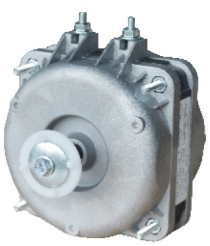



国家高新技术企业

National High-tech Enterprise

中国·杭州

Hangzhou，China

公司介绍 Company introduction

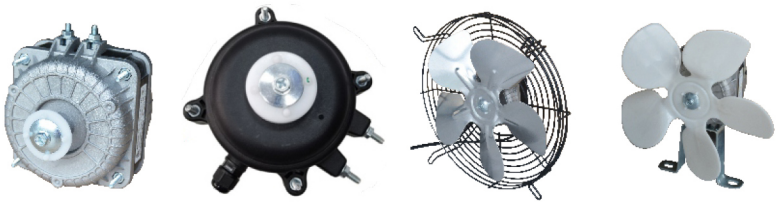

杭州莱鼎精密制造有限公司成立于2020年4月，位于具有“小上海”之称的浙江省杭州市萧山区临浦镇，距杭州萧山国际机场25公里，距杭州东站20公里，距杭州南站7公里，环境优美，交通便利，人杰地灵，地理位置得天独厚。

杭州莱鼎是一家集微型特种电机及其铁芯研发、生产、销售于一体的现代化企业，公司研发、生产的冷柜电机、冷凝器散热风机、蒸发器风机、罩极异步电机、110V/220V双电压电机、ECM直流无刷电机等交直流微型特种电机，产品主要应用于智能家用电器、商用冷柜、厨卫电器、医疗器械等各类设备或器械，性能、寿命和可靠性指标都达到国内先进水平。

2022年公司斥巨资自主研发成功多条全自动柔性数字化生产线，具有年产1000万台微型特种的电机产能；将柔性制造技术广泛应用到产品制造各个环节，可以在兼顾客户个性化需求的同时不牺牲生产效率和质量控制水平，同时降低故障率、提高性价比，使产品性能和质量达到国内领先、国际先进水平；公司被认定为《国家高新技术企业》、《浙江省科技型企业》等，产品均通过3C、CE、VDE等权威认证。

“业，兴于竞、拓于新、精于勤、恒于信”，杭州莱鼎将紧抓历史机遇，以科学发展观纵观全局，坚持数字赋能，走“专、精、特、新”的发展道路，对国际先进标准，积累用户需求实现技术创新，以行业领军、技术领先为发展目标，不断提高企业核心竞争力，竭诚为广大客户提供优质的产品和服务。

热忱欢迎新老客户及各界朋友莅临指导或来电垂询！

Hangzhou Laiding Precision Manufacturing Co., Ltd. was established in April 2020, located in Linpu Town, Xiaoshan District, Hangzhou City, Zhejiang Province, known as "Little Shanghai". It is 25 kilometers away from Hangzhou Xiaoshan International Airport, 20 kilometers away from Hangzhou East Station, and 7 kilometers away from Hangzhou South Station. The environment is beautiful, the transportation is convenient, the people are outstanding, and the geographical location is unique.

Hangzhou Laiding is a modern enterprise that integrates the research and development, production, and sales of micro special motors and their iron cores. The company develops and produces AC and DC micro special motors such as refrigerator motors, condenser cooling fans, evaporator fans, cover pole asynchronous motors, 110V/220V dual voltage motors, ECM DC brushless motors, etc. The products are mainly used in various types of equipment or instruments such as smart household appliances, commercial refrigerators, kitchen and bathroom appliances, medical equipment, etc, The performance, lifespan, and reliability indicators have all reached the advanced level in China.

In 2022, the company invested heavily in independent research and development of multiple fully automatic flexible digital production lines, with an annual production capacity of 10 million micro special motors; Widely applying flexible manufacturing technology to various stages of product manufacturing can balance customer personalized needs without sacrificing production efficiency and quality control level, while reducing failure rate and improving cost-effectiveness, making product performance and quality reach domestic and international advanced levels; The company has been recognized as a "National High tech Enterprise", "Zhejiang Province Science and Technology Enterprise", and its products have passed authoritative certifications such as 3C, CE, and VDE.

Hangzhou Laiding will seize the historical opportunity, take a scientific development perspective, adhere to digital empowerment, and follow the development path of "specialization, refinement, uniqueness, and novelty". With the goal of leading the industry and leading the technology, Hangzhou Laiding will continue to improve its core competitiveness and wholeheartedly provide high-quality products and services to its customers, adhering to international advanced standards and accumulating user needs to achieve technological innovation.

Warmly welcome new and old customers and friends from all walks of life to come and guide or inquire by phone!

荣誉资质

Honorary qualifications















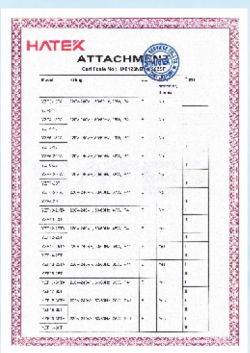

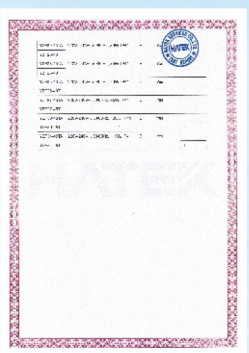



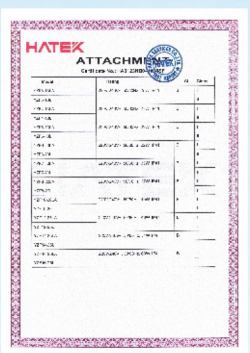

杭州莱鼎精密制造有限公司
Hangzhou Laiding Precision Manufacturing Co., Ltd

电话/Tel：0571-82428682
网址/Web：http://www.hzldjm.com

金莱鼎 JinLaiDing

Electronically Commutated Motor



产品说明 Product description

1.本系列电机采用先进的电子控制技术，电机能效高，与YZF系列电机相比，节能80%以上。

2.本系列电机外部安装尺寸均与YZF系列一致，电机的附件如风叶、风圈、网罩、支架等均通用。

3.本系列电机具有高安全、高防护等级、高可靠性、恒速控制、上电反转、可控制反转、昼夜两种转速模式和0-10V无级调速等功能。

1.This series of motor adopts advanced electronic control technology, the motor operation efficiency is high, compared with YZF series motor, energy saving above 80%.

2. The external installation dimensions of this series of motors are consistent with the YZF series, and the accessories of the motor such as wind blades, wind rings, mesh covers, brackets, etc., are universal.

3.This series of motor has high safety class, high protection class, high reliability, constant speed control, reverse on start, reverse on demand, day and night two speed modes and 0-10Vdc full speed control and other functions.

使用说明

工作方式：S1　　绝缘等级：Class B Or Class F

防护等级：IP 65　　环境温度：-30℃~+50℃

保护等级：Class II　　安装角度：任意

Instructions for Use

Operating mode: s1　　Insulation class: B/F

Type of protection: IP65　　Working ambient temperature: -30℃~+50℃

Protecting class: Class II　　Mounting position: Any

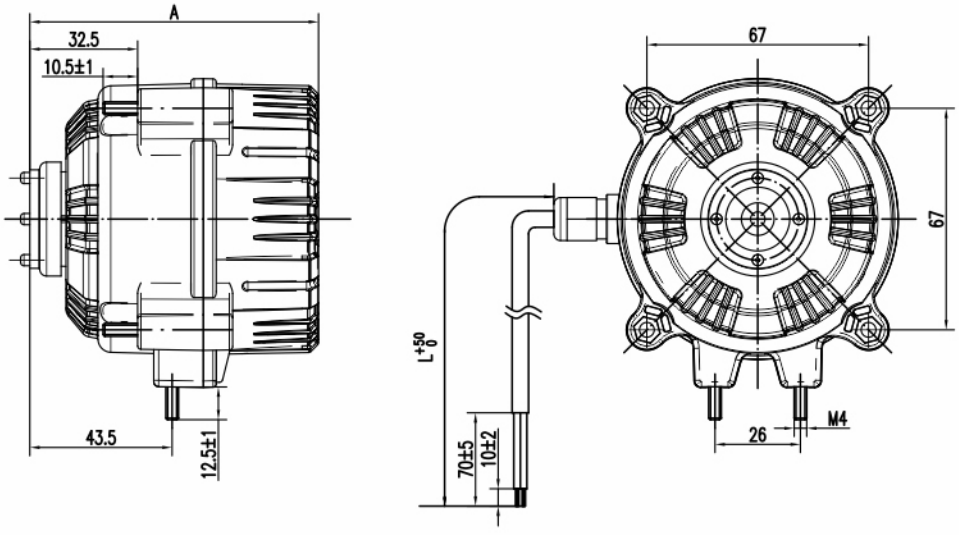

性能参数表 Performance parameter table

型号 Type	特征 Features	额定电压 Voltage	额定频率 Frequency	输出功率 Output capacity	转速 Speed	尺寸A Dimension
7108	Standard CW&CCW 2 Speeds	110-240V	50-60Hz	5W	500-2200	83
7112	Standard CW&CCW 2 Speeds	110-240V	50-60Hz	15W	500-2200	88
7120	Standard CW&CCW 2 Speeds	110-240V	50-60Hz	20W	500-2200	96

杭州莱鼎精密制造有限公司
Hangzhou Laiding Precision Manufacturing Co., Ltd
电话/Tel：0571-82428682
网址/Web：http://www.hzldjm.com

金莱鼎 JinLaiDing

Electronically Commutated Motor

型号说明 Model Description

ECM 71 12

- 12 — 定子叠厚 Thickness of laminated core
- 71 — 定子外径 Diameter of laminated core
- ECM — 高效节能电机 Electronically Commutated Motor

ECM电机负载选型图
Matching motor-fan

Speed	FAN					
	154	172	200	230	254	300
Aluminium fan 1300 r/min	22°	22°	22°	22°	22°	22°
	25°	25°	25°	25°	25°	25°
	28°	28°	28°	28°	28°	
	31°	31°	31°	31°	31°	
	34°	34°	34°	34°	34°	
Aluminium fan 1450 r/min	22°	22°	22°	22°	22°	22°
	25°	25°	25°	25°	25°	
	28°	28°	28°	28°	28°	
	31°	31°	31°	31°	31°	
	34°	34°	34°	34°	34°	
Aluminium fan 1550 r/min	22°	22°	22°	22°	22°	
	25°	25°	25°	25°	25°	
	28°	28°	28°	28°	28°	
	31°	31°	31°	31°		
	34°	34°	34°	34°		
Aluminium fan 1800 r/min	22°	22°	22°	22°	22°	
	25°	25°	25°	25°		
	28°	28°	28°	28°		
	31°	31°	31°	31°		
	34°	34°	34°			

ECM7108
ECM7112
ECM7120

YZF系列单相4极罩极异步电动机产品概述

金莱鼎 JinLaiDing

YZF SERIES SINGLE- PHASE 4- SHADED-POLE ASYNCHRONOUS MOTOR PRODUCT INTRODUCTION

产品说明 Product description

●YZF系列电机为单相4极罩极异步电动机，额定电压为220-240V~50/60Hz或110-120V~60Hz；可以特殊订制110V/220V双压电机。广泛应用在冷柜、冰柜、保鲜柜、蛋糕柜、散热器、蒸发器等制冷设备和小型通风设备。

●电机的输出功率范围从3W到34W，可通过改变电机铁芯厚度和绕线参数来调整电机的输出功率。

●我公司生产的标准电机绕组材质为铜线，绝缘等级为E级，防护等级为IP41。可根据客户要求生产铝线绕组电机及绝缘等级为B、F、H级，防护等级为IP42、IP44的电机等。

●输出功率在10W及以下的电机采用阻抗保护，输出功率大于10W的电机采用热保护器保护，热保护器的断开温度为135℃±5℃或150℃±5℃。

●电机一般适用环境温度为-30℃-50℃。

●由于我公司生产的标准电机采用含油轴承，所以工厂建议采用水平方式安装，同时我们也可根据客户要求生产滚珠轴承电机。

●在适用环境及温度下，电机平均使用寿命为20000小时以上。

●我公司生产的电机全部通过CCC、 CE认证，大部分电机通过VDE、UL认证。

●电机配套风叶有铝风叶和塑料风叶可供客户选择；安装方式有支架、法兰、网罩等多种方式；安装支架螺丝间距有18mm、26mm、18/26mm等。

●电机使用前，必须将电机接地线与外部接地装置有效连接。

●The YZF series motor is a single-phase 4-pole shaded pole asynchronous motor with a rated voltage of 220-240V~50/60Hz or 110-120V~60Hz; 110V/220V dual voltage motors can be specially customized. Widely used in refrigeration equipment such as refrigerators, freezers, freshness cabinets, cake cabinets, radiators, evaporators, and small ventilation equipment.

●The output power range of the motor ranges from 3W to 34W, and the output power of the motor can be adjusted by changing the thickness of the motor core and winding parameters.

●The standard motor winding material produced by our company is copper wire, with an insulation level of E and a protection level of IP41. We can produce aluminum wire winding motors and motors with insulation levels of B, F, H, and protection levels of IP42 and IP44 according to customer requirements.

●Motors with an output power of 10W or less are protected by impedance protection, while motors with an output power greater than 10W are protected by a thermal protector. The breaking temperature of the thermal protector is 135 ℃± 5 ℃ or 150 ℃± 5 ℃.

●Motors are generally suitable for an ambient temperature of -30 ℃ -50 ℃.

●Due to the standard motor produced by our company using oil bearing, the factory recommends horizontal installation, and we can also produce ball bearing motors according to customer requirements.

●Under the applicable environment and temperature, the average service life of the motor is over 20000 hours.

●All motors produced by our company have passed CCC and CE certifications, and most of them have passed VDE and UL certifications.

●The supporting fan blades for the motor include aluminum and plastic blades for customers to choose from; There are various installation methods such as brackets, flanges, and mesh covers; The spacing between installation bracket screws is 18mm, 26mm, 18/26mm, etc.

●Before using the motor, the motor grounding wire must be effectively connected to the external grounding device.

型号说明 Model description

例如
For example:

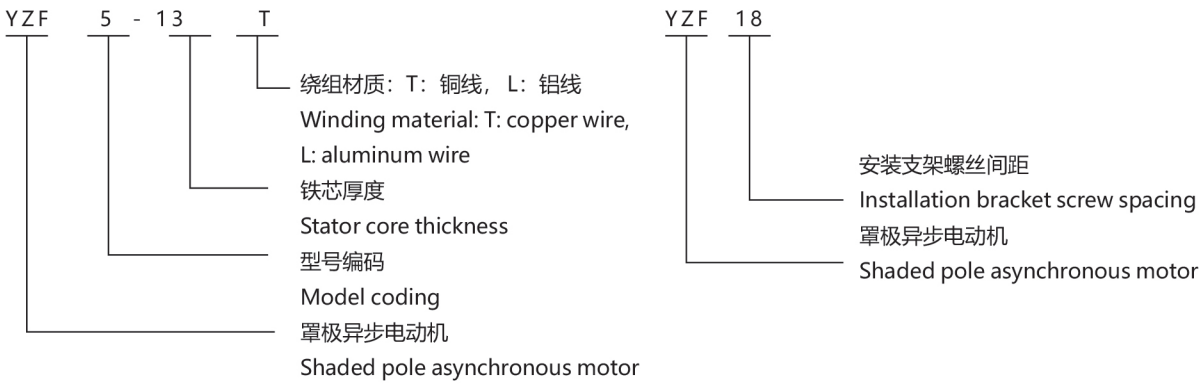

杭州莱鼎精密制造有限公司
Hangzhou Laiding Precision Manufacturing Co., Ltd
电话/Tel：0571-82428682
网址/Web：http://www.hzldjm.com

金莱鼎 JinLaiDing

YZF18 SERIES MOTOR

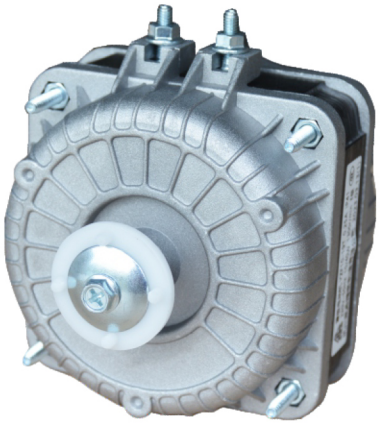

产品说明 Product description

1、本款YZF18系列电机采用安装支架螺丝间距为18mm的端盖，具有安全可靠、噪音低、振动小、寿命长等优点;
2、本系列电机适用于冷柜、冰柜、酒柜、保鲜柜、冷凝器、蒸发器、散热器等制冷设备;
3、本系列电机的引出线规格及尺寸"L"可根据用户要求生产，可根据客户要求订做接线端子。

1. The Yzf18 series motor adopts the end cover with 18mm mounting bracket screw spacing, which has the advantages of safety, reliability, low noise, small vibration and long life
2. This series of motor is suitable for refrigerating equipment such as freezer, freezer, wine cabinet, fresh-keeping cabinet, condenser, evaporator, radiator, etc.
3. The lead wire specification and size"L" of the series motor can be produced according to the customer's requirements, and the terminal can be made according to the customer's requirements.

使用说明

工作方式：S1　　绝缘等级：Class E
防护等级：IP41　　环境温度：-30°C~ +50°C

Instructions for Use

Operating mode: : S1 Insulation grade: : Class E
Protection Class: : IP41 Environmental Temperature: : -30°C~ +50°C

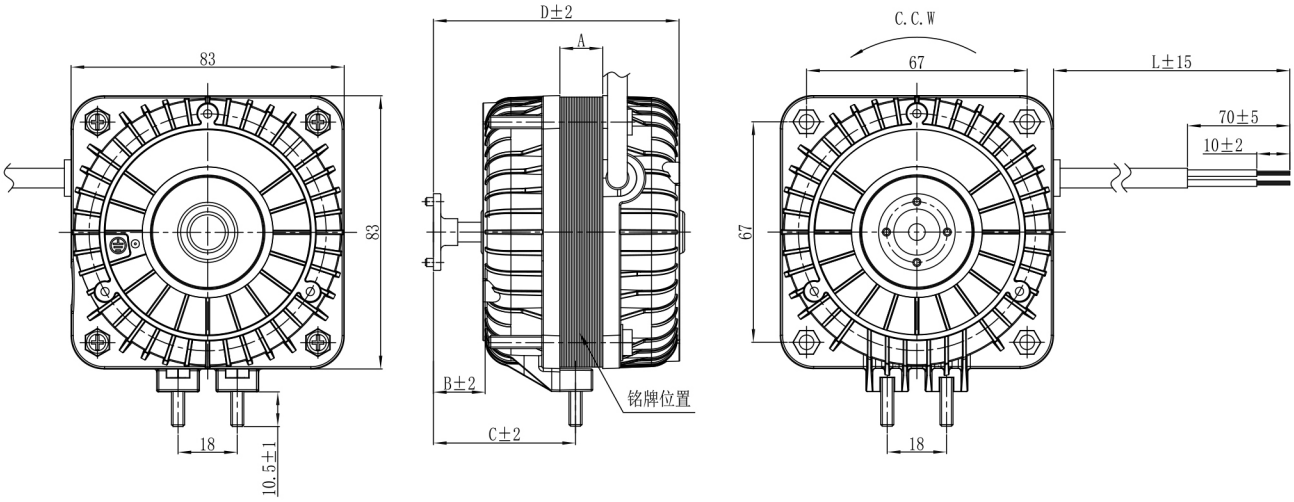

性能参数表 Performance parameter table

型号/TYPE	YZF3-13T	YZF5-13T		YZF10-20T		YZF16-25T		YZF20-30T		YZF25-40T		YZF34-45T	
额定电压/VOLTAGE V	220-240	220-240	110-120	220-240	110/120	220-240	110-120	220-240	110-120	220-240	110-120	220-240	110-120
额定频率/FREQUENCY Hz	50/60	50/60	60	50/60	60	50/60	60	50/60	60	50/60	60	50/60	60
输入功率/INPUT POWER W	25	35	35	40	40	60	60	75	75	90	90	110	110
输出功率/OUTPUT POWER W	3	5	5	10	10	16	16	20	20	25	25	34	34
额定电流/RATED CURRENT A	0.16	0.21	0.45	0.25	0.6	0.37	0.7	0.50	1.10	0.65	1.35	0.75	1.50
额定转速/RATED SPEED r/min	1300	1300	1450	1300	1450	1300	1450	1300	1450	1300	1450	1300	1450
额定风量/ AIR VOLUME m^3/h	210	455	510	645	790	780	900	1000	1050	1030	1100	1080	1210
A mm	13	13		19		25		30		40		45	
B mm	15	15		16		16		16		16		16	
C mm	45	45		46		46		46		46		46	
D mm	78	78		85		92		97		106		114	
风叶型号/FAN BLADE mm	170	Φ200		Φ230		Φ250		Φ254		Φ300		Φ300	
净重/WEIGHT kg	0.8	0.8		1.1		1.3		1.5		1.8		2.1	
每箱数量/QTY pcs	24	24		24		12		12		12		12	
LICENSE	CE CCC	CE CCC		CE CCC		CE CCC		CE CCC		CE CCC		CE CCC	

杭州莱鼎精密制造有限公司
Hangzhou Laiding Precision Manufacturing Co., Ltd
电话/Tel：0571-82428682
网址/Web：http://www.hzldjm.com

YZF26系列电机

金莱鼎 JinLaiDing

YZF26 SERIES MOTOR

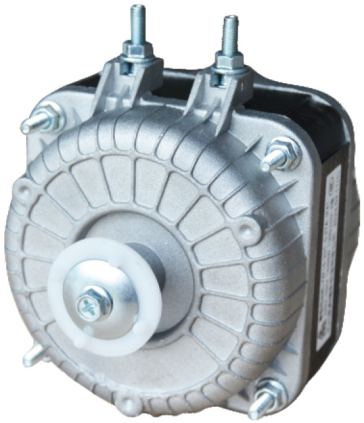

产品说明 Product description

1、本款YZF26系列电机采用安装支架螺丝间距为26mm的端盖，具有安全可靠、噪音低、振动小、寿命长等优点;
2、本系列电机适用于冷柜、冰柜、酒柜、保鲜柜、冷凝器、蒸发器、散热器等制冷设备;
3、本系列电机的引出线规格及尺寸"L"可根据用户要求生产，可根据客户要求订做接线端子。

1. The Yzf26 series motor adopts the end cover with 26mm mounting bracket screw spacing, which has the advantages of safety, reliability, low noise, small vibration and long life
2. This series of motor is suitable for refrigerating equipment such as freezer, freezer, wine cabinet, fresh-keeping cabinet, condenser, evaporator, radiator, etc
3. The lead wire specification and size"L" of the series motor can be produced according to the customer's requirements, and the terminal can be made according to the customer's requirements.

使用说明

工作方式：S1　　绝缘等级：Class E
防护等级：IP41　　环境温度：-30°C~ +50°C

Instructions for Use

Operating mode: : S1 Insulation grade: : Class E
Protection Class: : IP41 Environmental Temperature: : -30°C~ +50°C

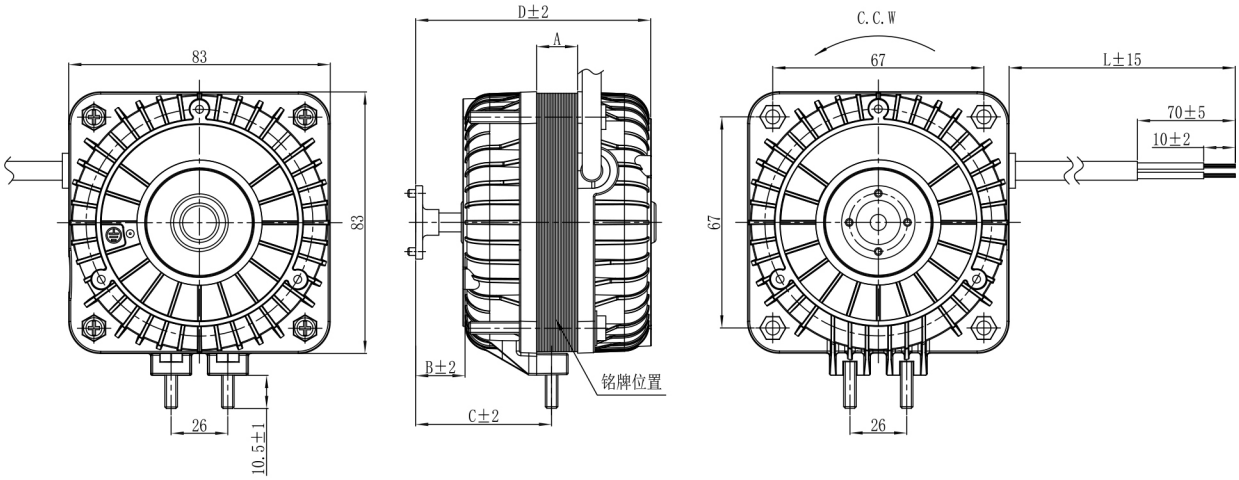

性能参数表 Performance parameter table

型号/TYPE	YZF3-13T	YZF5-13T		YZF10-20T		YZF16-25T		YZF20-30T		YZF25-40T		YZF34-45T	
额定电压/VOLTAGE V	220-240	220-240	110-120	220-240	110/120	220-240	110-120	220-240	110-120	220-240	110-120	220-240	110-120
额定频率/FREQUENCY Hz	50/60	50/60	60	50/60	60	50/60	60	50/60	60	50/60	60	50/60	60
输入功率/INPUT POWER W	25	35	35	40	40	60	60	75	75	90	90	110	110
输出功率/OUTPUT POWER W	3	5	5	10	10	16	16	20	20	25	25	34	34
额定电流/RATED CURRENT A	0.16	0.21	0.45	0.25	0.6	0.37	0.7	0.50	1.10	0.65	1.35	0.75	1.50
额定转速/RATED SPEED r/min	1300	1300	1450	1300	1450	1300	1450	1300	1450	1300	1450	1300	1450
额定风量/AIR VOLUME m /h	210	455	510	645	790	780	900	1000	1050	1030	1100	1080	1210
A mm	13	13		19		25		30		40		45	
B mm	15	15		16		16		16		16		16	
C mm	45	45		46		46		46		46		46	
D mm	78	78		85		92		97		106		114	
风叶型号/FAN BLADE mm	170	Φ200		Φ230		Φ250		Φ254		Φ300		Φ300	
净重/WEIGHT kg	0.8	0.8		1.1		1.3		1.5		1.8		2.1	
每箱数量/QTY pcs	24	24		24		12		12		12		12	
LICENSE	CE CCC	CE CCC		CE CCC		CE CCC		CE CCC		CE CCC		CE CCC	

杭州莱鼎精密制造有限公司
Hangzhou Laiding Precision Manufacturing Co., Ltd
电话/Tel：0571-82428682
网址/Web：http://www.hzldjm.com

YZF26系列电机（滚珠轴承电机）

金莱鼎 JinLaiDing

YZF26 SERIES MOTOR YZF26 SERIES MOTOR (BALL BEARING MOTOR)

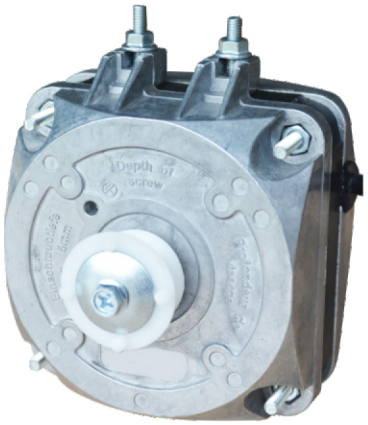

产品说明 Product description

1、本款YZF26系列滚珠轴承电机采用滚珠轴承，端盖的安装支架螺丝间距为26mm，具有安全可靠、噪音低、振动小、寿命长等优点;
2、本系列电机适用于冷柜、冰柜、酒柜、保鲜柜、冷凝器、蒸发器、散热器等制冷设备;
3、本系列电机的引出线规格及尺寸"L"可根据用户要求生产，可根据客户要求订做接线端子。

1. The Yzf26 series ball bearing motor adopts ball bearing. The distance between the screws of the mounting bracket of the end cover is 26mm. It has the advantages of safety, reliability, low noise, small vibration and long life
2. This series of motor is suitable for refrigerating equipment such as freezer, freezer, wine cabinet, fresh-keeping cabinet, condenser, evaporator, radiator, etc
3. The lead wire specification and size"L" of the series motor can be produced according to the customer's requirements, and the terminal can be made according to the customer's requirements.

使用说明

工作方式：S1　　绝缘等级：Class E
防护等级：IP41　　环境温度：-30°C~ +50°C

Instructions for Use

Operating mode: : S1 Insulation grade: : Class E
Protection Class: : IP41 Environmental Temperature: : -30°C~ +50°C

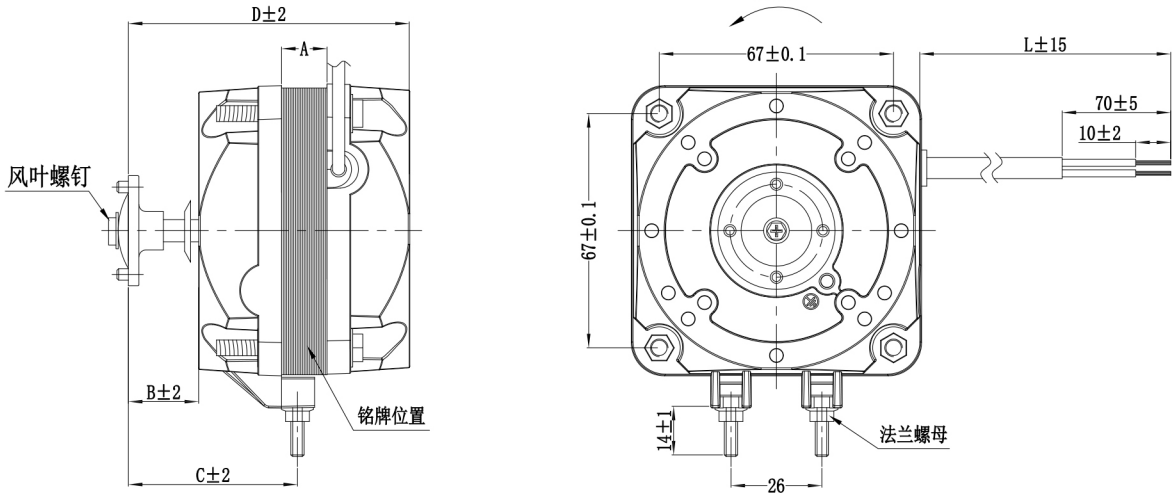

性能参数表 Performance parameter table

型号/TYPE	YZF3-13T	YZF5-13T		YZF10-20T		YZF16-25T		YZF20-30T		YZF25-40T		YZF34-45T	
额定电压/VOLTAGE V	220-240	220-240	110-120	220-240	110/120	220-240	110-120	220-240	110-120	220-240	110-120	220-240	110-120
额定频率/FREQUENCY Hz	50/60	50/60	60	50/60	60	50/60	60	50/60	60	50/60	60	50/60	60
输入功率/INPUT POWER W	25	35	35	40	40	60	60	75	75	90	90	110	110
输出功率/OUTPUT POWER W	3	5	5	10	10	16	16	20	20	25	25	34	34
额定电流/RATED CURRENT A	0.16	0.21	0.45	0.25	0.6	0.37	0.7	0.50	1.10	0.65	1.35	0.75	1.50
额定转速/RATED SPEED r/min	1300	1300	1450	1300	1450	1300	1450	1300	1450	1300	1450	1300	1450
额定风量/AIR VOLUME m /h	210	455	510	645	790	780	900	1000	1050	1030	1100	1080	1210
A mm	13	13		19		25		30		40		45	
B mm	15	15		16		16		16		16		16	
C mm	45	45		46		46		46		46		46	
D mm	78	78		85		92		97		105		113	
风叶型号/FAN BLADE mm	170	Φ200		Φ230		Φ250		Φ254		Φ300		Φ300	
净重/WEIGHT kg	0.8	0.8		1.1		1.3		1.5		1.8		2.1	
每箱数量/QTY pcs	24	24		24		12		12		12		12	
LICENSE	CE CCC	CE CCC		CE CCC		CE CCC		CE CCC		CE CCC		CE CCC	

杭州莱鼎精密制造有限公司
Hangzhou Laiding Precision Manufacturing Co., Ltd
电话/Tel：0571-82428682
网址/Web：http://www.hzldjm.com

YZF26系列电机

金莱鼎 JinLaiDing

YZF26 SERIES MOTOR

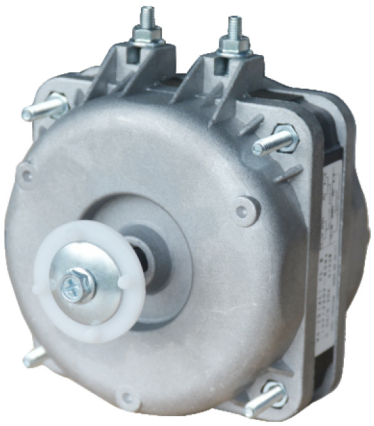

产品说明 Product description

1、本款YZF26系列电机采用安装支架螺丝间距为26mm的光面端盖，具有安全可靠、噪音低、振动小、寿命长等优点;
2、本系列电机适用于冷柜、冰柜、酒柜、保鲜柜、冷凝器、蒸发器、散热器等制冷设备;
3、本系列电机的引出线规格及尺寸"L"可根据用户要求生产，可根据客户要求订做接线端子。

1. This YZF26 series motor adopts a smooth end cover with a mounting bracket screw spacing of 26mm, which has the advantages of safety and reliability, low noise, low vibration, and long service life;
2. This series of motors is suitable for refrigeration equipment such as refrigerators, freezers, wine cabinets, fresh-keeping cabinets, condensers, evaporators, radiators, etc;
3. The specifications and size "L" of the outgoing wire for this series of motors can be produced according to user requirements, and wiring terminals can be customized according to customer requirements.

使用说明

工作方式：S1　　绝缘等级：Class E
防护等级：IP41　　环境温度：-30°C~ +50°C

Instructions for Use

Operating mode: : S1 Insulation grade: : Class E
Protection Class: : IP41 Environmental Temperature: : -30°C~ +50°C

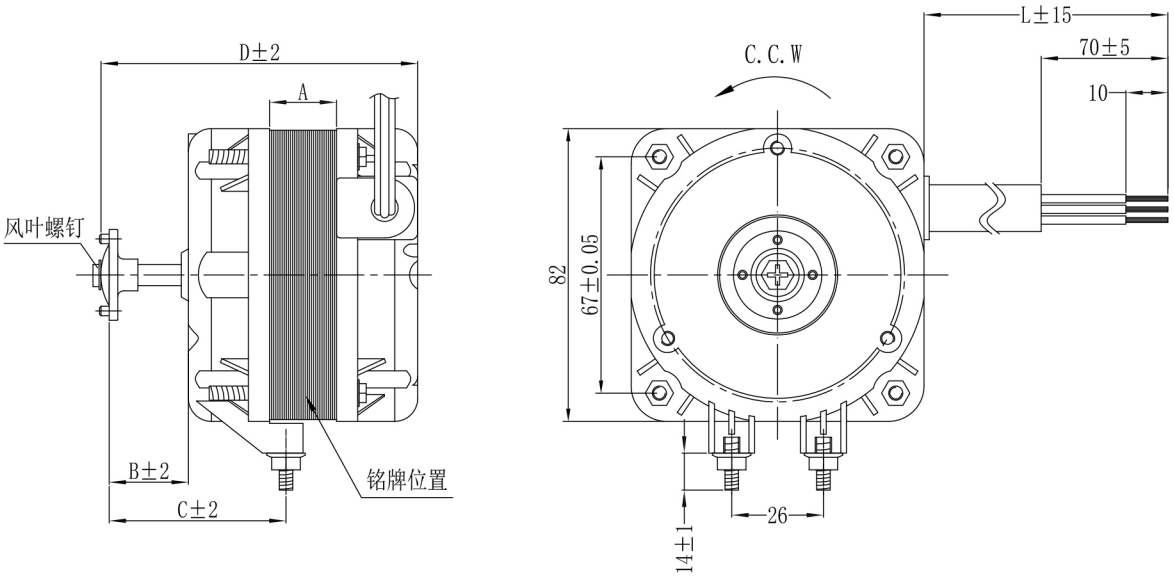

性能参数表 Performance parameter table

型号/TYPE	YZF3-13T	YZF5-13T		YZF10-20T		YZF16-25T		YZF20-30T		YZF25-40T		YZF34-45T	
额定电压/VOLTAGE V	220-240	220-240	110-120	220-240	110/120	220-240	110-120	220-240	110-120	220-240	110-120	220-240	110-120
额定频率/FREQUENCY Hz	50/60	50/60	60	50/60	60	50/60	60	50/60	60	50/60	60	50/60	60
输入功率/INPUT POWER W	25	35	35	40	40	60	60	75	75	90	90	110	110
输出功率/OUTPUT POWER W	3	5	5	10	10	16	16	20	20	25	25	34	34
额定电流/RATED CURRENT A	0.16	0.21	0.45	0.25	0.6	0.37	0.7	0.50	1.10	0.65	1.35	0.75	1.50
额定转速/RATED SPEED r/min	1300	1300	1450	1300	1450	1300	1450	1300	1450	1300	1450	1300	1450
额定风量/AIR VOLUME m^3/h	210	455	510	645	790	780	900	1000	1050	1030	1100	1080	1210
A mm	13	13		19		25		30		40		45	
B mm	18	18		19		19		18		18		18	
C mm	45	45		46		46		46		46		46	
D mm	78	78		84		90		92		102		106	
风叶型号/FAN BLADE mm	170	Φ200		Φ230		Φ250		Φ254		Φ300		Φ300	
净重/WEIGHT kg	0.8	0.8		1.1		1.3		1.5		1.8		2.1	
每箱数量/QTY pcs	24	24		24		12		12		12		12	
LICENSE	CE CCC	CE CCC		CE CCC		CE CCC		CE CCC		CE CCC		CE CCC	

杭州莱鼎精密制造有限公司
Hangzhou Laiding Precision Manufacturing Co., Ltd
电话/Tel：0571-82428682
网址/Web：http://www.hzldjm.com

YZF26系列电机（双电压电机）

金莱鼎 JinLaiDing

YZF26 SERIES MOTOR (DUAL VOLTAGE MOTOR)

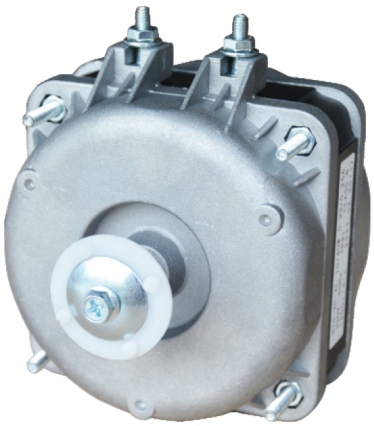

产品说明 Product description

1、本款YZF26系列双电压电机为出品外贸产品，额定电压为110/220V~60Hz，采用安装支架螺丝间距为26mm的光面端盖，绕组线圈可采用铜线或铝线生产，规格齐全，具有安全可靠、噪音低、振动小、寿命长等优点，深受广大外贸客户和外商的青睐;
2、本系列电机适用于冷柜、冰柜、酒柜、保鲜柜、冷凝器、蒸发器、散热器等制冷设备;
3、本系列电机的引出线规格及尺寸"L"可根据用户要求生产，接线端子可根据客户要求订做。

1. This YZF26 series dual voltage motor is a foreign trade product, with a rated voltage of 110/220V~60Hz. It adopts a smooth end cover with a mounting bracket screw spacing of 26mm. The winding coil can be produced using copper or aluminum wire, with complete specifications and advantages such as safety and reliability, low noise, low vibration, and long service life. It is highly favored by foreign trade customers and foreign businesses;
2. This series of motors is suitable for refrigeration equipment such as refrigerators, freezers, wine cabinets, fresh-keeping cabinets, condensers, evaporators, radiators, etc;
3. The specifications and size "L" of the outgoing wires of this series of motors can be produced according to user requirements, and the wiring terminals can be customized according to customer requirements.

使用说明

工作方式：S1　　绝缘等级：Class B
防护等级：IP41　　环境温度：-30°C~ +50°C

Instructions for Use

Operating mode: : S1 Insulation grade: : Class B
Protection Class: : IP41 Environmental Temperature: : -30°C~ +50°C

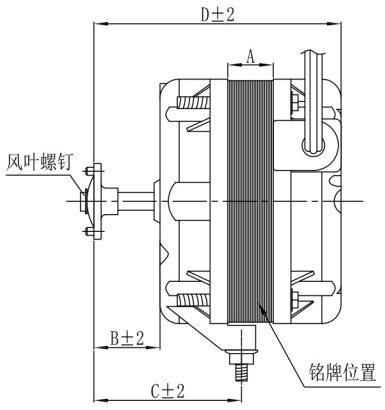

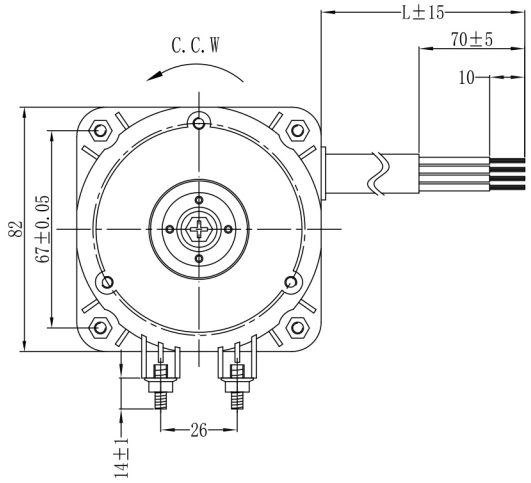

性能参数表 Performance parameter table

型号/TYPE	YZF5-13T		YZF10-20T		YZF16-25T		YZF20-30T		YZF25-40T		YZF34-45T	
额定电压/VOLTAGE V	220-240	110-120	220-240	110/120	220-240	110-120	220-240	110-120	220-240	110-120	220-240	110-120
额定频率/FREQUENCY Hz	60	60	60	60	60	60	60	60	60	60	60	60
输入功率/INPUT POWER W	35	35	40	40	60	60	75	75	90	90	110	110
输出功率/OUTPUT POWER W	5	5	10	10	16	16	20	20	25	25	34	34
额定电流/RATED CURRENT A	0.21	0.45	0.25	0.6	0.37	0.7	0.50	1.10	0.65	1.35	0.75	1.50
额定转速/RATED SPEED r/min	1450		1450		1450		1450		1450		1450	
额定风量/AIR VOLUME m^3/h	510		645		900		1050		1100		1210	
A mm	13		19		25		30		40		45	
B mm	18		19		19		18		18		18	
C mm	45		46		46		46		46		46	
D mm	78		84		90		92		102		106	
风叶型号/FAN BLADE mm	Φ200		Φ230		Φ250		Φ254		Φ300		Φ300	
净重/WEIGHT kg	0.8		1.1		1.3		1.5		1.8		2.1	
每箱数量/QTY pcs	20		20		12		12		12		12	
LICENSE	CE		CE		CE		CE		CE		CE	

杭州莱鼎精密制造有限公司
Hangzhou Laiding Precision Manufacturing Co., Ltd
电话/Tel：0571-82428682
网址/Web：http://www.hzldjm.com

YZF18系列电机（铝线电机）

金莱鼎 JinLaiDing

YZF18 SERIES MOTOR (ALUMINUM WIRE MOTOR)

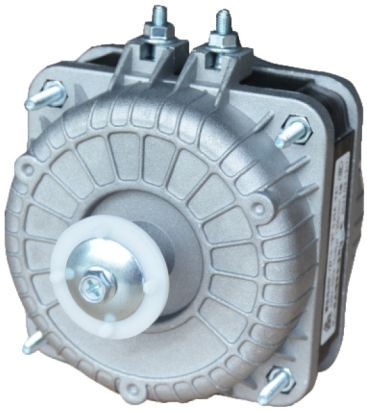

产品说明 Product description

1、本款YZF18系列电机绕组线圈采用铝漆包线生产，安装支架螺丝间距为18mm，规格齐全，和铜线电机相比，更具价格优势，性能基本和铜线电机一致;
2、本系列电机适用于冷柜、冰柜、酒柜、保鲜柜、冷凝器、蒸发器、散热器等制冷设备;
3、本系列电机的引出线规格及尺寸"L"可根据用户要求生产，接线端子可根据客户要求订做。

1. This YZF18 series motor winding coil is produced with aluminum enameled wire, with a mounting bracket screw spacing of 18mm and complete specifications. Compared with copper wire motors, it has a more price advantage, and its performance is basically the same as that of copper wire motors;
2. This series of motors is suitable for refrigeration equipment such as refrigerators, freezers, wine cabinets, fresh-keeping cabinets, condensers, evaporators, radiators, etc;
3. The specifications and size "L" of the outgoing wires of this series of motors can be produced according to user requirements, and the wiring terminals can be customized according to customer requirements.

使用说明

工作方式：S1　　绝缘等级：Class B
防护等级：IP41　　环境温度：-30°C~ +50°C

Instructions for Use

Operating mode: : S1 Insulation grade: : Class B
Protection Class: : IP41 Environmental Temperature: : -30°C~ +50°C

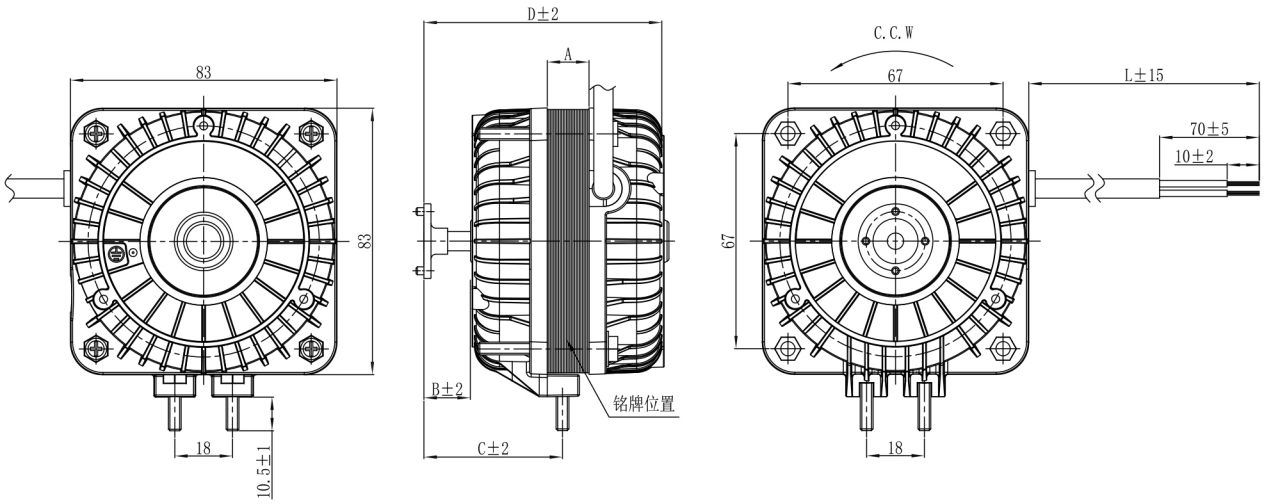

性能参数表 Performance parameter table

型号/TYPE	YZF3-13L		YZF5-13L		YZF10-20L		YZF16-25L	
额定电压/VOLTAGE V	220-240	110-120	220-240	110-120	220-240	110/120	220-240	110-120
额定频率/FREQUENCY Hz	50/60	60	50/60	60	50/60	60	50/60	60
输入功率/INPUT POWER W	25	25	35	35	40	40	60	60
输出功率/OUTPUT POWER W	3	3	3.5	3.5	8	8	13	13
额定电流/RATED CURRENT A	0.19	0.40	0.21	0.45	0.25	0.6	0.37	0.7
额定转速/RATED SPEED r/min	1300	1450	1300	1450	1300	1450	1300	1450
额定风量/AIR VOLUME m^3/h	455	510	455	510	645	790	780	900
A mm	13		13		19		25	
B mm	15		15		16		16	
C mm	45		45		46		46	
D mm	78		78		82		90	
风叶型号/FAN BLADE mm	Φ200		Φ200		Φ230		Φ250	
净重/WEIGHT kg	0.8		0.8		1.0		1.2	
每箱数量/QTY pcs	24		24		24		12	
LICENSE	CE CCC		CE CCC		CE CCC		CE CCC	

杭州莱鼎精密制造有限公司
Hangzhou Laiding Precision Manufacturing Co., Ltd
电话/Tel：0571-82428682
网址/Web：http://www.hzldjm.com

金莱鼎 JinLaiDing

MOTOR ACCESSORIES - ALUMINUM FAN BLADES

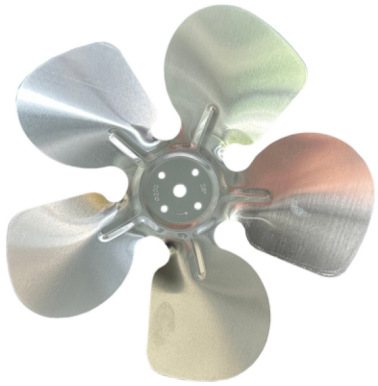

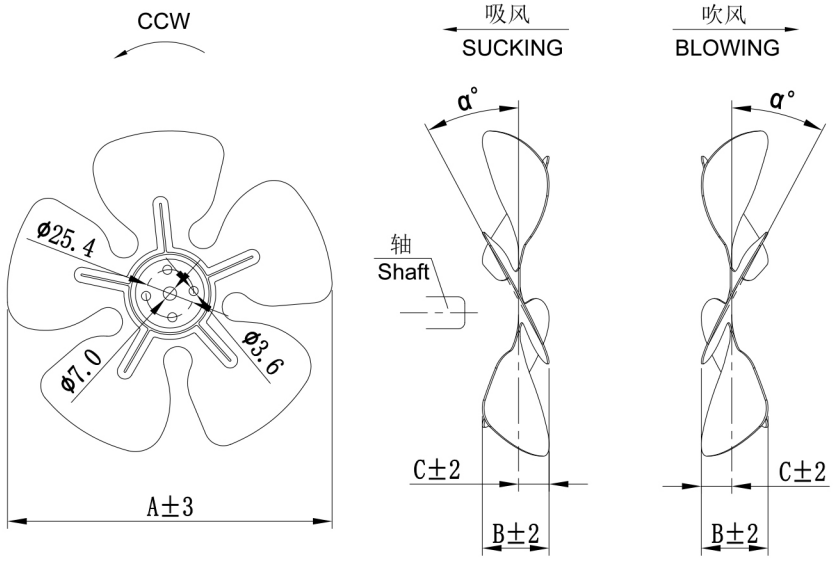

风叶规格尺寸 Fan specification and dimension

FAN TYPE	α° / B C / A mm	19°		22°		25°		28°		31°		34°	
		B mm	C mm	B mm	C mm	B mm	C mm	B mm	C mm	B mm	C mm	B mm	C mm
Φ154	152	24	13	27	14	31	16	34	17	37	19	40	21
Φ172	170	25	13	28	15	31	16	35	18	40	20	42	21
Φ200	198	27	14	30	16	33	17	37	19	41	21	44	23
Φ230	228	31	15	33	16	37	19	41	21	43	22	45	23
Φ250	248	31	15	34	17	37	19	40	21	43	22	45	23
Φ254	252	32	15	35	17	38	19	41	21	44	22	47	23
Φ300	298	31	16	35	17	41	22	44	23	48	25	52	27

风叶选型 fan model selection

Model / α° / Fan	YZF3-13		YZF5-13		YZF10-20		YZF16-25		YZF20-30		YZF25-40		YZF34-45	
	50Hz	60Hz	50Hz	60Hz	50Hz	60Hz	50Hz	60Hz	50Hz	60Hz	50Hz	60Hz	50Hz	60Hz
Φ154	31	31												
Φ172	31	31												
Φ200	28	28	28	28	31	31								
Φ230					28	28	34	31						
Φ250					22	22	28	28						
Φ254							28	25	31	28				
Φ300									22	22	25	22	28	25

电机配件-塑料风叶

金莱鼎 JinLaiDing

MOTOR ACCESSORIES - PLASTIC FAN BLADES



A类风叶
Fan Blade (Type A)



B类风叶
Fan Blade (Type B)

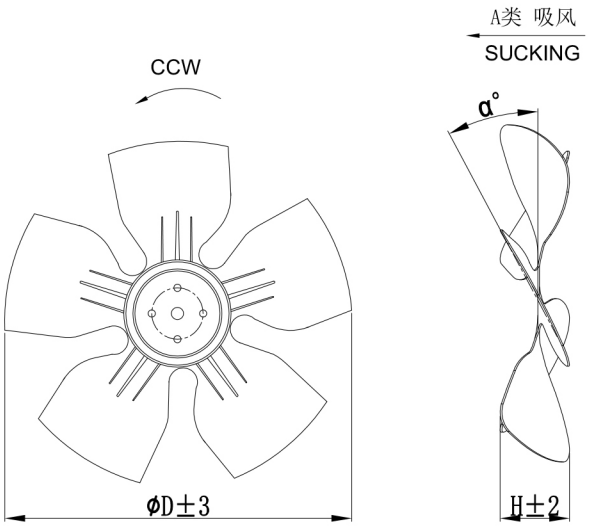

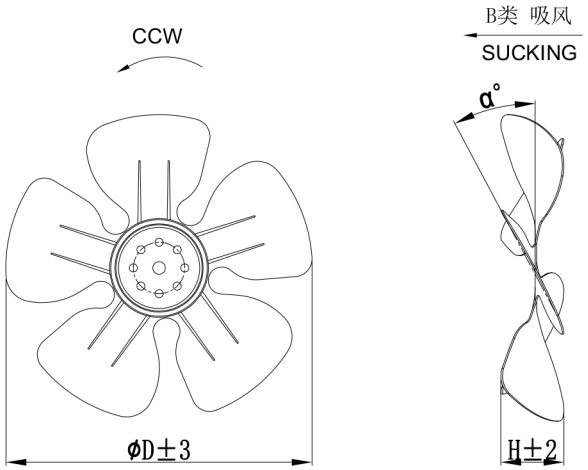

规格尺寸 Specification size

型号/Type / 尺寸/Size	A 类	B 类
	Φ170	Φ200
ΦD	170mm	200mm
H	30	34
α°	28°	25°
耐温 / Temperature	80°C	80°C

杭州莱鼎精密制造有限公司
Hangzhou Laiding Precision Manufacturing Co., Ltd
电话/Tel：0571-82428682
网址/Web：http://www.hzldjm.com

金莱鼎 JinLaiDing

YZF SERIES ACCESSORIES - (FLANGE)



A类型
Type A



B类型
Type B



C类型
Type C

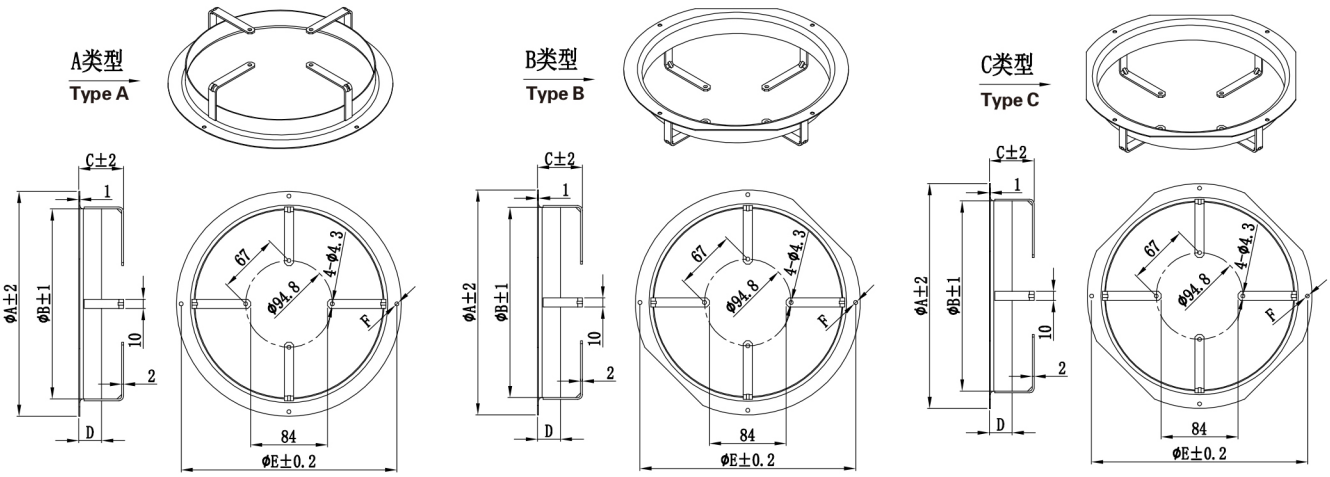

规格尺寸 Specification size

型号/Model	类型/Type	ΦA/mm	ΦB/mm	C/mm	D/mm	ΦE/mm	F/mm	
Φ154	A/B/C	200	162	49	25	190	Φ4.3 孔	M4 牙
Φ172	A/B/C	223	180	49	25	208	Φ4.3 孔	M4 牙
Φ200	A/B/C	246	208	49	25	236	Φ4.3 孔	M4 牙
Φ230	A/B/C	278	238	49	25	266	Φ4.3 孔	M4 牙
Φ254	A/B/C	300	268	49	25	290	Φ4.3 孔	M4 牙
Φ300	A/B/C	378	308	49	30	365	Φ4.3 孔	M4 牙

金莱鼎 JinLaiDing

YZF SERIES ACCESSORIES -(MESH ENCLOSURE)

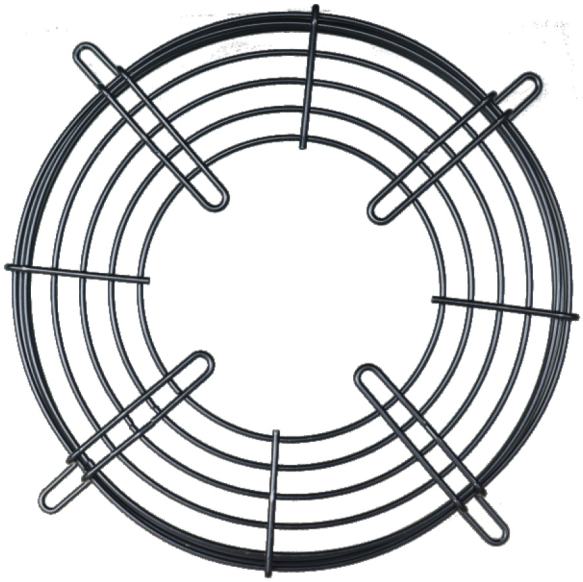

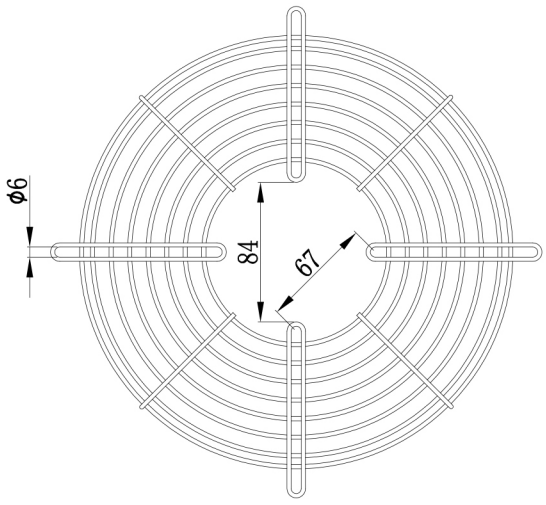

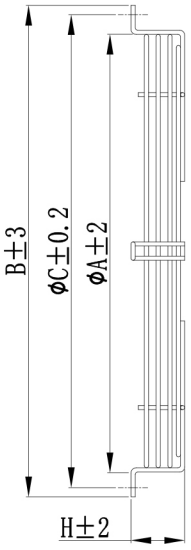

规格尺寸 Specification size

型号/Model	ΦA/mm	ΦB/mm	C/mm	H/mm
Φ154	170	202	188	30
Φ172	195	233	220	35
Φ200	225	280	268	45
Φ230	252	286	274	45
Φ254	277	334	315	50
Φ300	330	390	370	50

表中 B、H 尺寸可根据客户要求订制生产。
The dimensions B and H described in the table may be customized and produced according to the client requirements.

金莱鼎 JinLaiDing

YZF SERIES ACCESSORIES -(SUPPORT)

A类型
Type A

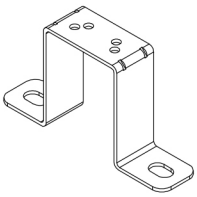

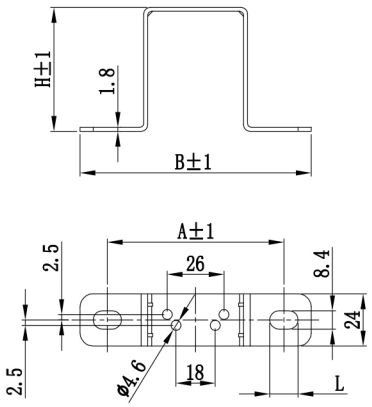

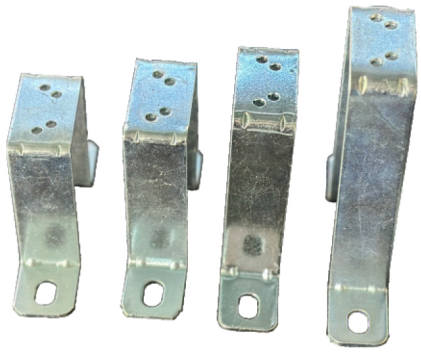

B类型
TypeB

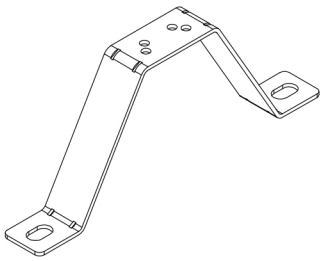

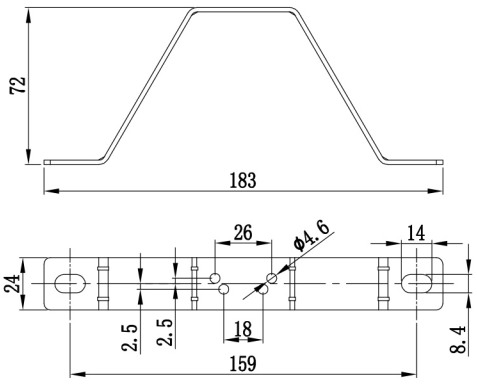



规格尺寸 Specification size

Type/型号	H/mm	A/mm	B/mm	L/mm
H39	39	78	100	14
H55	55	81	106	13
H63	63	81	106	13
H72	72	81	106	13
H84	84	81	106	20
H92	92	81	106	14
H109-1	109	81	106	14
H109-2	109	78	100	14
H109-3	109	78	100	14

金莱鼎
JinLaiDing

诚信服务·客户至上

The Good Faith Service The Customer Is Supreme

杭州莱鼎精密制造有限公司

Hangzhou Laiding Precision Manufacturing Co., Ltd

地址/Add：浙江省杭州市萧山区临浦镇红石路9号
No.9，Hongshi Road,Linpu Town，Xiaoshan District，Hangzhou City,Zhejiang Province
邮编/P.C：311251
电话/Tel：0571-82428682
传真/Fax：0571-82428682
网址/Web：http://www.hzldjm.com