金莱鼎 JinLaiDing

Electronically Commutated Motor



产品说明 Product description

1.本系列电机采用先进的电子控制技术，电机能效高，与YZF系列电机相比，节能80%以上。

2.本系列电机外部安装尺寸均与YZF系列一致，电机的附件如风叶、风圈、网罩、支架等均通用。

3.本系列电机具有高安全、高防护等级、高可靠性、恒速控制、上电反转、可控制反转、昼夜两种转速模式和0-10V无级调速等功能。

1.This series of motor adopts advanced electronic control technology, the motor operation efficiency is high, compared with YZF series motor, energy saving above 80%.

2. The external installation dimensions of this series of motors are consistent with the YZF series, and the accessories of the motor such as wind blades, wind rings, mesh covers, brackets, etc., are universal.

3.This series of motor has high safety class, high protection class, high reliability, constant speed control, reverse on start, reverse on demand, day and night two speed modes and 0-10Vdc full speed control and other functions.

使用说明

工作方式：S1　　绝缘等级：Class B Or Class F

防护等级：IP 65　　环境温度：-30℃~+50℃

保护等级：Class II　　安装角度：任意

Instructions for Use

Operating mode: s1　　Insulation class: B/F

Type of protection: IP65　　Working ambient temperature: -30℃~+50℃

Protecting class: Class II　　Mounting position: Any

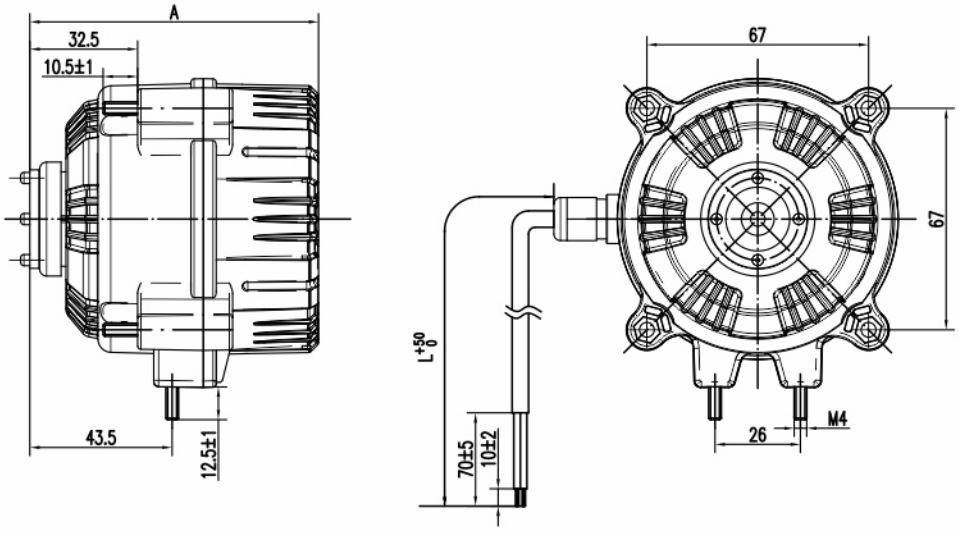

性能参数表 Performance parameter table

型号 Type	特征 Features	额定电压 Voltage	额定频率 Frequency	输出功率 Output capacity	转速 Speed	尺寸A Dimension
7108	Standard CW&CCW 2 Speeds	110-240V	50-60Hz	5W	500-2200	83
7112	Standard CW&CCW 2 Speeds	110-240V	50-60Hz	15W	500-2200	88
7120	Standard CW&CCW 2 Speeds	110-240V	50-60Hz	20W	500-2200	96

杭州莱鼎精密制造有限公司
Hangzhou Laiding Precision Manufacturing Co., Ltd
电话/Tel：0571-82428682
网址/Web：http://www.hzldjm.com

金莱鼎 JinLaiDing

Electronically Commutated Motor

型号说明 Model Description

ECM 71 12

- 12 — 定子叠厚 Thickness of laminated core
- 71 — 定子外径 Diameter of laminated core
- ECM — 高效节能电机 Electronically Commutated Motor

ECM电机负载选型图
Matching motor-fan

Speed	FAN					
	154	172	200	230	254	300
Aluminium fan 1300 r/min	22°	22°	22°	22°	22°	22°
	25°	25°	25°	25°	25°	25°
	28°	28°	28°	28°	28°	
	31°	31°	31°	31°	31°	
	34°	34°	34°	34°	34°	
Aluminium fan 1450 r/min	22°	22°	22°	22°	22°	22°
	25°	25°	25°	25°	25°	
	28°	28°	28°	28°	28°	
	31°	31°	31°	31°	31°	
	34°	34°	34°	34°	34°	
Aluminium fan 1550 r/min	22°	22°	22°	22°	22°	
	25°	25°	25°	25°	25°	
	28°	28°	28°	28°	28°	
	31°	31°	31°	31°		
	34°	34°	34°	34°		
Aluminium fan 1800 r/min	22°	22°	22°	22°	22°	
	25°	25°	25°	25°		
	28°	28°	28°	28°		
	31°	31°	31°	31°		
	34°	34°	34°			

ECM7108
ECM7112
ECM7120