**驱动硅基生命，加速超级进化！**

**“Drive silicon-based life and accelerate super evolution.”**


**Shenzhen Huatron Technology Co., Ltd.**

**Website:** www.huatronix.com **E-mail:** huatron@hanslaser.com 0755 2322 9364

**Headquarter Address:** 3rd Floor, Building 2, Dazu Exciting Light Global Intelligent Manufacturing Center, No. 100, Chongqing Road, Baoan District, Shenzhen, Guangdong Province

**R&D Center Address:** Building C, Dazu Laser, No. 18 Weixin Road, Suzhou Industrial Park, Jiangsu Province


EN2504

HUATRON
华创

# HX Micro DC Servo System

# HDC Low-voltage DC Servo System

“make servo tuning easier”

Modbus CANopen EtherCAT

**www.huatronix.com**

HUATRON
华创

精彩系列

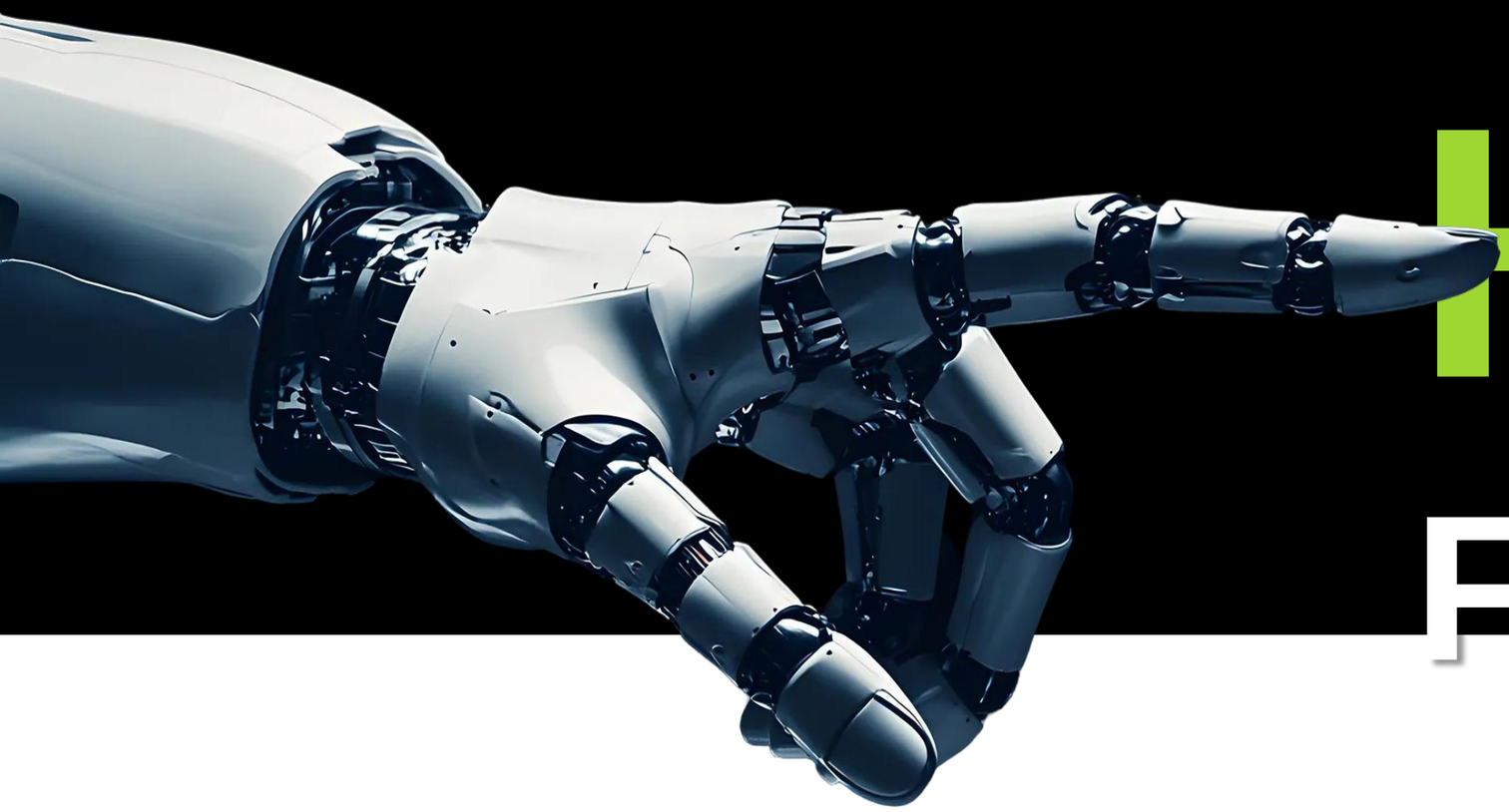

# HX Drive

Create more possibilities
with you

# Future

Modbus CANopen EtherCAT

**HX-25A**

DC14-60V/25A

# Excellent Performance!

## Tity Titan

Specialized, Refined, Unique, Innovative

The new generation of **HX** the micro DC servo system has a higher power density with a smaller size. It supports EtherCAT, CANopen and other mainstream communication methods, and supports A/B/Z increment encoder, resolver, Tamagawa absolute encoder, BISS-C encoder, and other protocols type encoder.

It can drive different kinds of motors including PMSM, torque motors, linear motors, voice coil motors. It applies to robotics, AGV, medical, and semiconductor industries.

PMSM Motor | Torque Motor | Linear Motor | Voice Coil

Digital Signal | Hall Sensor Dtection | BiSS-C | Tamagawa

Modbus | CANopen | EtherCAT

## Smaller Size, Higher Power Density

**HX** Micro DC Servo System utilizes advanced wide-bandgap power semiconductor devices and a hybrid analog-digital control chip architecture, to deliver a low-voltage DC servo product with ultra-high power density. It achieves full independent control by replacing imported core components, making it one of the highest power density drive products in its category within the industry.

Digital Signal

Full Closed-Loop

The entire **HX** single-axis drive series comes standard with full closed-loop functionality, supporting a standard digital A/B/Z linear encoder. This effectively eliminates positional deviations caused by mechanical backlash and improves the positioning accuracy of the equipment.

## Application Scenarios

Applicable to robotics, AGV, medical, and semiconductor industries

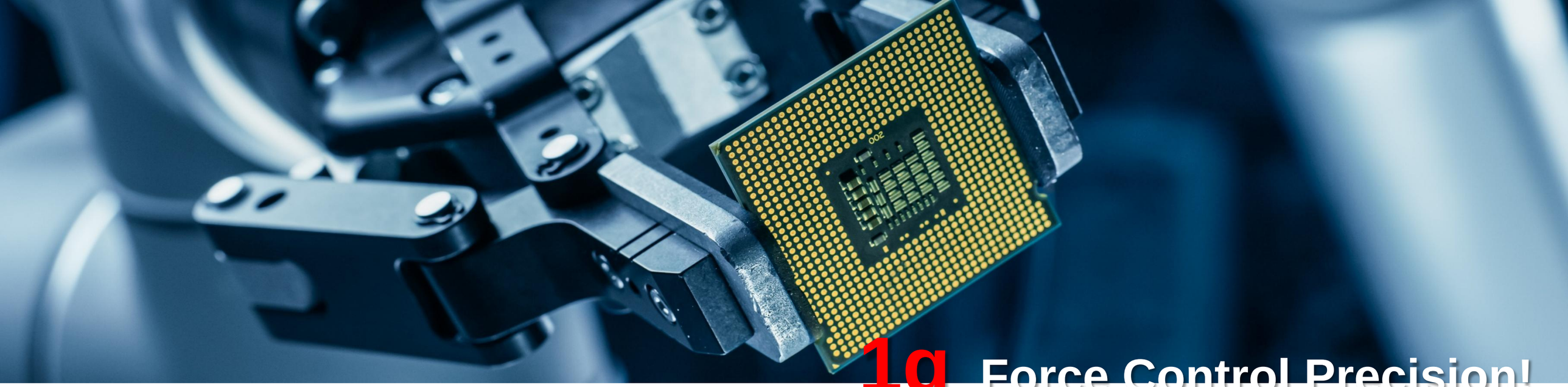

# 1g Force Control Precision!

## Force Control with Precision

**HX** and **HDC** Series Low-Voltage Servo Systems both feature built-in "sensorless force control algorithms," enabling precise force control with a minimum accuracy of 1g. During the actuator contacting the workpiece, the system can quickly approach the part, significantly improving production cycle times. Additionally, the two-speed control in the "slow-speed phase" ensures smooth speed transitions, allowing for precise and controllable pressure during the force control phase.

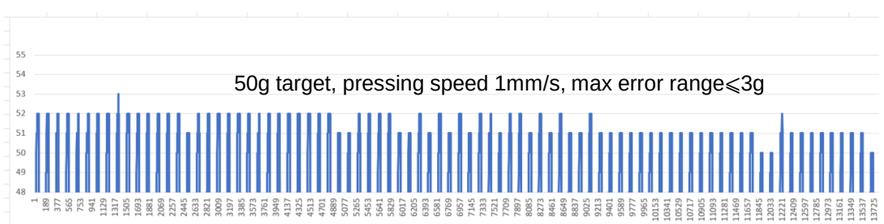


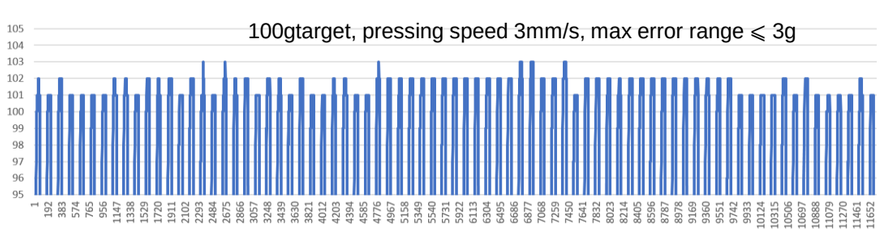


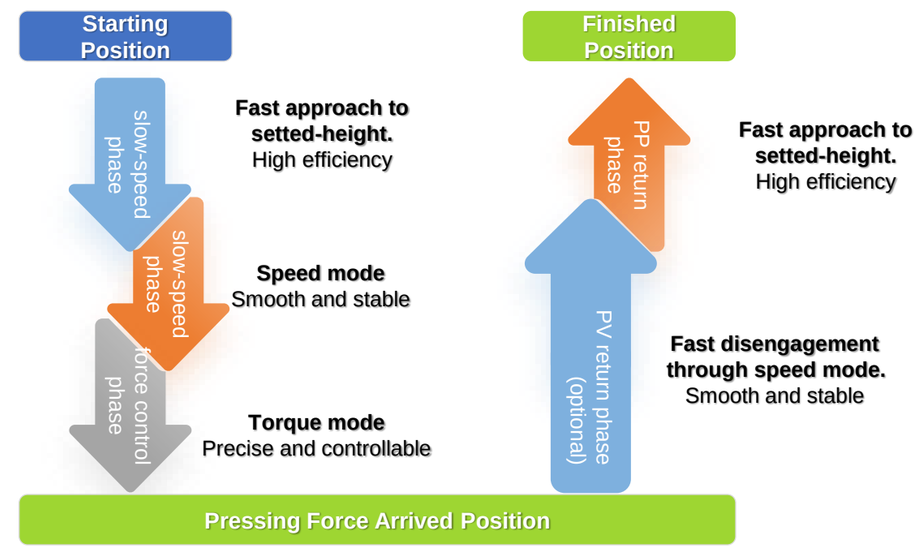


## Application Scenarios

Widely used in semiconductor precision patches, electric grip, 3C mobile phone screen pressing, and other industry applications!

## Naming Rule

**HX - E 005 D48 S - LP**

① ② ③ ④ ⑤ ⑥

| 1 | Product Series |
|---|---|
| HX | Series |

| 2 | Command Type |
|---|---|
| E | EtherCAT |
| RC | RS485+CANopen |

| 3 | Rated Output Current |
|---|---|
| 001 | 1A |
| 005 | 5A |
| 010 | 10A |
| 025 | 25A |

| 4 | Voltage Specifications |
|---|---|
| D48 | DC 14~60V |

| 5 | Safety Function |
|---|---|
| Blank | By Default |
| S | STO |

| 6 | Functional Interface |
|---|---|
| Blank | with terminal block |
| LP | without terminal block |
| 3 | 3 axes Note 1 |

Note 1: only for 005 type at present.

- **DC14~60V**

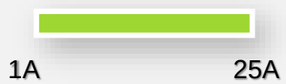


- **The rated output current of HX micro low-voltage servo drive ranges from 1A to 25A.**

HX-E EtherCAT with terminal block — EtherCAT

| Current | HX-E | HX-E +STO |
|---|---|---|
| 1A | HX-E001D48 | HX-E001D48S |
| 5A | HX-E005D48 | HX-E005D48S |
| 10A | HX-E010D48 | HX-E010D48S |
| 25A | HX-E025D48 | HX-E025D48S |

HX-E***-LP EtherCAT without terminal block — EtherCAT

| Current | HX-E***LP | HX-E***LP +STO |
|---|---|---|
| 1A | HX-E001D48-LP | HX-E001D48S-LP |
| 5A | HX-E005D48-LP | HX-E005D48S-LP |
| 10A | HX-E010D48-LP | HX-E010D48S-LP |
| 25A | HX-E025D48-LP | HX-E025D48S-LP |

HX-E***-3 EtherCAT 3 axes — EtherCAT

| Current | HX-E***3 | HX-E***3 +STO |
|---|---|---|
| 5A | HX-E005D48-3 | HX-E005D48S-3 |

RS485+CANopen — Modbus CANopen

| Current | HX-RC | HX-RC +STO |
|---|---|---|
| 1A | HX-RC001D48 | HX-RC001D48S |
| 5A | HX-RC005D48 | HX-RC005D48S |
| 10A | HX-RC010D48 | HX-RC010D48S |
| 25A | HX-RC025D48 | HX-RC025D48S |

## Specification Configuration

| Functional Configuration | EtherCAT | Modbus CANopen |
|---|---|---|
| | HX-E | HX-RC |
| I/O | 6DI/4DO | 6DI/4DO |
| Analog | 2AI | 2AI |
| STO | 2 channels optional for STO model | 2 channels optional for STO model |
| RS485 | - | √ |
| A/B/Z linear encoder | √ | √ |
| BISS-C linear encoder | √ | √ |
| SSI linear encoder | √ | √ |
| Tamagawa absolute encoder | √ | √ |
| Hall Sensor Dtection | √ | √ |
| Resolver | - | √ |
| Force Control Function | √ | in development |

## General Specifications

| Drive Model | HX-□001D48 | HX-□005D48 | HX-□010D48 | HX-□025D48 |
|---|---|---|---|---|
| Rated Output Current(Arms) | 1 | 5 | 10 | 25 |
| Max Output Current(Arms) | 2.5 | 12.5 | 25 | 62.5 |
| Supply Voltage Range | 14V-60VDC | | | |

| Items | | Specifications |
|---|---|---|
| Conditions of Usage | Usage/Storage Temperature | RC model: -40～+55℃ / -40～+85℃<br>E model: 0～+40℃ / -20～+70℃ |
| | Usage/Storage Humidity | below 90%RH (Non-Condensing Conditions) |
| | Vibration/Shock resistance | 4.9m/s$^2$ / 19.6m/s$^2$ |
| | Pollution degree | PD2 |
| | Altitude | The maximum altitude is 5000 m.<br>● For altitudes not higher than 1000 m, derating is not required.<br>● For altitudes above 1000 m, derate 1% for every additional 100m.<br>● For altitudes above 2000 m, contact Huarton. |
| Built-in functions | Protective functions | Including protections against overcurrent, overvoltage, undervoltage, overload, locked rotor, main circuit detection error, heatsink overtemperature, overspeed, encoder error, and parameter error |
| | Connection device | USB |
| | Usability functions | Easy-to-use tuning interface, motor parameter configuration, adaptive parameter tuning, expert tuning, Speed Loop, Position Loop, Current Loop tuning and operation functions, Zero-Point Calibration (Angle Identification), and more. |
| Performance | Dynamic characteristics of current loop | Step response: 187.5μs(0~100%)<br>Sin/cos response:<br>-3dB amplitude attenuation bandwidth, 2000Hz(command signal: ±25%);<br>-90°phase shift bandwidth, 3500Hz (command signal: ±25%); |
| | Speed control tange | 0~12000rpm<br>For speed above 6000 rpm, contact Huarton. |
| | Dynamic characteristics of velocity loop | Step response: 562.5μs(0~1000rpm)<br>Sin/cos response:<br>-3dB amplitude attenuation bandwidth, 1000Hz(command signal: ±25%);<br>-90°phase shift bandwidth, 630Hz(command signal: ±500rpm) |
| | Torque control precision | ±2% |

# HX-E Connector Definition

EtherCAT

| No. | J2 First Encoder Connector | | | |
|---|---|---|---|---|
| | ABZ | BISS | Hall Sensor | Tamagawa absolute encoder |
| 1 | 5V | 5V | 5V | 5V |
| 2 | GND | GND | GND | GND |
| 3 | A+ | CLK+ | - | - |
| 4 | A- | CLK- | - | - |
| 5 | B+ | DATA+ | - | SD+ |
| 6 | B- | DATA- | - | SD- |
| 7 | Z+ | - | - | - |
| 8 | Z- | - | - | - |
| 9 | - | - | HALL U | - |
| 10 | - | - | HALL V | - |
| 11 | - | - | HALL W | - |
| 12 | - | - | - | - |
| 13 | - | - | - | - |
| 14 | - | - | - | - |
| 15 | PE | PE | PE | PE |
| 16 | - | - | - | - |

| J3 Second Encoder Connector | | | |
|---|---|---|---|
| No. | Signal | No. | Signal |
| 1 | 5V | 9 | - |
| 2 | GND | 10 | - |
| 3 | A+ | 11 | - |
| 4 | A- | 12 | - |
| 5 | B+ | 13 | - |
| 6 | B- | 14 | - |
| 7 | Z+ | 15 | PE |
| 8 | Z- | 16 | - |

| Communication Connector | | | |
|---|---|---|---|
| J6(IN) | | J7(OUT) | |
| No. | Signal | No. | Signal |
| 1 | TX+ | 1 | TX+ |
| 2 | TX- | 2 | TX- |
| 3 | RX+ | 3 | RX+ |
| 4 | - | 4 | - |
| 5 | - | 5 | - |
| 6 | RX- | 6 | RX- |
| 7 | - | 7 | - |
| 8 | - | 8 | - |

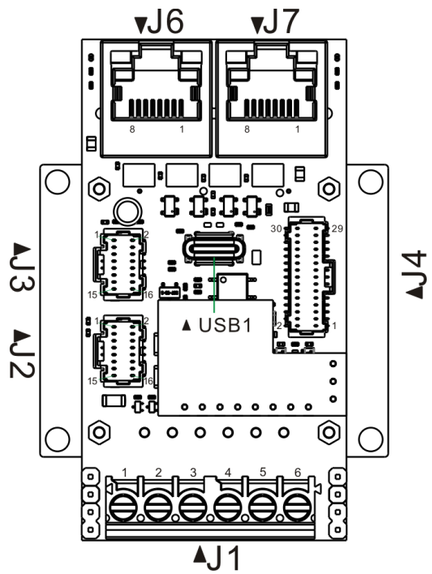


| J1 Power Connector | |
|---|---|
| No. | Signal |
| 1 | U |
| 2 | V |
| 3 | W |
| 4 | PE |
| 5 | DC+ |
| 6 | DC- |

| J4 I/O Connector | | | |
|---|---|---|---|
| No. | Signal | No. | Signal |
| 1 | STO1 Note 1 | 16 | DO4 |
| 2 | STO2 Note 1 | 17 | AI1+ |
| 3 | STO_COM | 18 | AI2+ |
| 4 | DI_COM | 19 | GND |
| 5 | DI1 | 20 | GND |
| 6 | DI2 | 21 | - |
| 7 | DI3 | 22 | - |
| 8 | DI4 | 23 | - |
| 9 | DI5 | 24 | - |
| 10 | DI6 | 25 | OCZ |
| 11 | DO_COM | 26 | GND |
| 12 | DO_24V | 27 | - |
| 13 | DO1 | 28 | - |
| 14 | DO2 | 29 | PE |
| 15 | DO3 | 30 | - |
| Note 1: only for STO model | | | |

# HX-E***-LP Connector Definition

EtherCAT

| No. | J2 First EncoderConnector | | | |
|---|---|---|---|---|
| | ABZ | BISS | Hall Sensor | Tamagawa absolute encoder |
| 1 | 5V | 5V | 5V | 5V |
| 2 | GND | GND | GND | GND |
| 3 | A+ | CLK+ | - | - |
| 4 | A- | CLK- | - | - |
| 5 | B+ | DATA+ | - | SD+ |
| 6 | B- | DATA- | - | SD- |
| 7 | Z+ | - | - | - |
| 8 | Z- | - | - | - |
| 9 | - | - | HALL U | - |
| 10 | - | - | HALL V | - |
| 11 | - | - | HALL W | - |
| 12 | - | - | - | - |
| 13 | - | - | - | - |
| 14 | - | - | - | - |
| 15 | PE | PE | PE | PE |
| 16 | - | - | - | - |

| J3 Second Encoder Connector | | | |
|---|---|---|---|
| No. | Signal | No. | Signal |
| 1 | 5V | 9 | - |
| 2 | GND | 10 | - |
| 3 | A+ | 11 | - |
| 4 | A- | 12 | - |
| 5 | B+ | 13 | - |
| 6 | B- | 14 | - |
| 7 | Z+ | 15 | PE |
| 8 | Z- | 16 | - |

| Communication Connector | | | |
|---|---|---|---|
| J6(IN) | | J7(OUT) | |
| No. | Signal | No. | Signal |
| 1 | TX+ | 1 | TX+ |
| 2 | TX- | 2 | TX- |
| 3 | RX+ | 3 | RX+ |
| 4 | - | 4 | - |
| 5 | - | 5 | - |
| 6 | RX- | 6 | RX- |
| 7 | - | 7 | - |
| 8 | - | 8 | - |

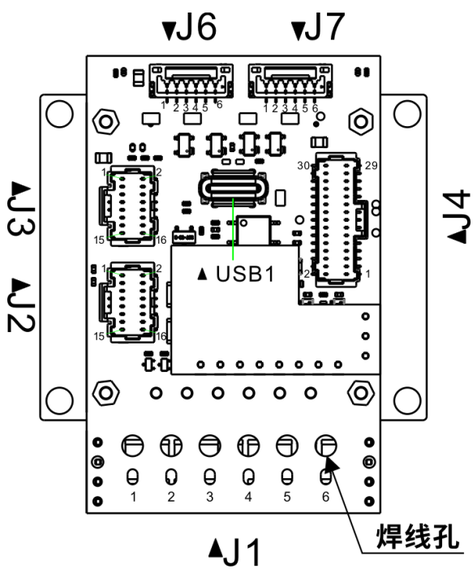


| J1 Power Connector | |
|---|---|
| No. | Signal |
| 1 | U |
| 2 | V |
| 3 | W |
| 4 | PE |
| 5 | DC+ |
| 6 | DC- |

| J4 I/O Connector | | | |
|---|---|---|---|
| No. | Signal | No. | Signal |
| 1 | STO1 Note 1 | 16 | DO4 |
| 2 | STO2 Note 1 | 17 | AI1+ |
| 3 | STO_COM | 18 | AI2+ |
| 4 | DI_COM | 19 | GND |
| 5 | DI1 | 20 | GND |
| 6 | DI2 | 21 | - |
| 7 | DI3 | 22 | - |
| 8 | DI4 | 23 | - |
| 9 | DI5 | 24 | - |
| 10 | DI6 | 25 | OCZ |
| 11 | DO_COM | 26 | GND |
| 12 | DO_24V | 27 | - |
| 13 | DO1 | 28 | - |
| 14 | DO2 | 29 | PE |
| 15 | DO3 | 30 | - |
| Note 1: only for STO model | | | |

| Communication Connector | | | |
|---|---|---|---|
| J6A(IN) | | J6C(OUT) | |
| No. | Signal | No. | Signal |
| 1 | TX+ | 1 | TX+ |
| 2 | TX- | 2 | TX- |
| 3 | RX+ | 3 | RX+ |
| 4 | - | 4 | - |
| 5 | - | 5 | - |
| 6 | RX- | 6 | RX- |
| 7 | - | 7 | - |
| 8 | - | 8 | - |

| J3 DO Connector | | | |
|---|---|---|---|
| No. | Signal | No. | Signal |
| 1 | COM_PWM1 | 16 | DO2-2 |
| 2 | DO-PWM1 | 17 | DO3_COM2 |
| 3 | COM_PWM2 | 18 | DO3-2 |
| 4 | DO-PWM2 | 19 | DO1_COM3 |
| 5 | COM_PWM3 | 20 | DO1-3 |
| 6 | DO-PWM3 | 21 | DO2_COM3 |
| 7 | DO1_COM1 | 22 | DO2-3 |
| 8 | DO1-1 | 23 | DO3_COM3 |
| 9 | DO2_COM1 | 24 | DO3-3 |
| 10 | DO2-1 | 25 | OCZ1/ASW1 |
| 11 | DO3_COM1 | 26 | 24V-PWM |
| 12 | DO3-1 | 27 | OCZ3/ASW3 |
| 13 | DO1_COM2 | 28 | OCZ2/ASW2 |
| 14 | DO1-2 | 29 | PE |
| 15 | DO2_COM2 | 30 | GND |

| J4 DI Connector | | | |
|---|---|---|---|
| No. | Signal | No. | Signal |
| 1 | STO1 Note 1 | 16 | AI1-2 |
| 2 | STO2 Note 1 | 17 | AI2-2 |
| 3 | STO_COM | 18 | AI1-3 |
| 4 | DI_COM | 19 | AI2-3 |
| 5 | DI1-1 | 20 | AGND |
| 6 | DI2-1 | 21 | AGND |
| 7 | DI3-1 | 22 | T1 |
| 8 | DI1-2 | 23 | T2 |
| 9 | DI2-2 | 24 | T3 |
| 10 | DI3-2 | 25 | GND |
| 11 | DI1-3 | 26 | 5V-1 |
| 12 | DI2-3 | 27 | - |
| 13 | DI3-3 | 28 | 5V-2 |
| 14 | DI_COM | 29 | PE |
| 15 | AI1-1 | 30 | 5V-3 |
| Note 1: only for STO model | | | |

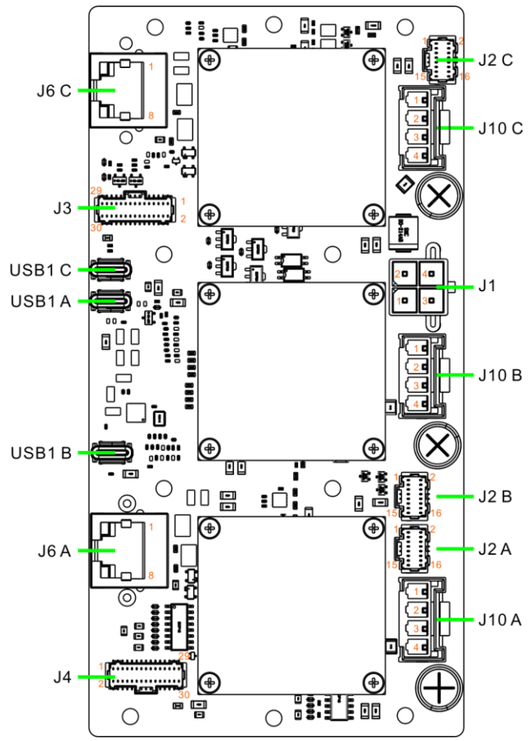


| No. | J2A/J2B/J2C Encoder Connector | | | |
|---|---|---|---|---|
| | ABZ | BISS | Hall Sensor | Tamagawa absolute encoder |
| 1 | 5V | 5V | 5V | 5V |
| 2 | GND | GND | GND | GND |
| 3 | A+ | CLK+ | - | - |
| 4 | A- | CLK- | - | - |
| 5 | B+ | DATA+ | - | SD+ |
| 6 | B- | DATA- | - | SD- |
| 7 | Z+ | - | - | - |
| 8 | Z- | - | - | - |
| 9 | - | - | HALL U | - |
| 10 | - | - | HALL V | - |
| 11 | - | - | HALL W | - |
| 12 | - | - | - | - |
| 13 | - | - | - | - |
| 14 | - | - | - | - |
| 15 | PE | PE | PE | PE |
| 16 | - | - | - | - |

| J1 Power Connector | |
|---|---|
| No. | Signal |
| 1 | PE |
| 2 | 48V |
| 3 | PE |
| 4 | 0V |

| J10A/J10B/J10C Power Connector | |
|---|---|
| No. | Signal |
| 1 | U |
| 2 | V |
| 3 | W |
| 4 | PE |

| No. | J2 First EncoderConnector | | | |
|---|---|---|---|---|
| | ABZ | BISS | Hall Sensor | Tamagawa absolute encoder |
| 1 | 5V | 5V | 5V | 5V |
| 2 | GND | GND | GND | GND |
| 3 | A+ | CLK+ | - | - |
| 4 | A- | CLK- | - | - |
| 5 | B+ | DATA+ | - | SD+ |
| 6 | B- | DATA- | - | SD- |
| 7 | Z+ | - | - | - |
| 8 | Z- | - | - | - |
| 9 | - | - | HALL U | - |
| 10 | - | - | HALL V | - |
| 11 | - | - | HALL W | - |
| 12 | - | - | - | - |
| 13 | - | - | - | - |
| 14 | - | - | - | - |
| 15 | PE | PE | PE | PE |
| 16 | - | - | - | - |

| J3 Second Encoder Connector | | | |
|---|---|---|---|
| No. | Signal | No. | Signal |
| 1 | 5V | 9 | - |
| 2 | GND | 10 | - |
| 3 | A+ | 11 | - |
| 4 | A- | 12 | - |
| 5 | B+ | 13 | - |
| 6 | B- | 14 | - |
| 7 | Z+ | 15 | PE |
| 8 | Z- | 16 | - |

| Communication Connector | | | |
|---|---|---|---|
| J6(IN) | | J7(OUT) | |
| No. | Signal | No. | Signal |
| 1 | RS485+ | 1 | RS485+ |
| 2 | RS485- | 2 | RS485- |
| 3 | CANL | 3 | CANL |
| 4 | CANH | 4 | CANH |
| 5 | GND | 5 | GND |
| 6 | PE | 6 | PE |

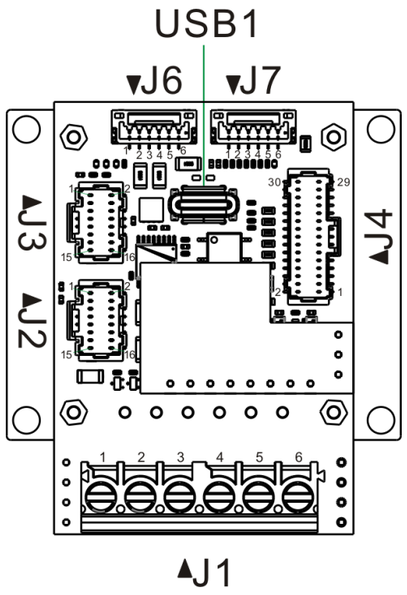


| J1 Power Connector | |
|---|---|
| No. | Signal |
| 1 | U |
| 2 | V |
| 3 | W |
| 4 | PE |
| 5 | DC+ |
| 6 | DC- |

| J4 I/O Connector | | | |
|---|---|---|---|
| No. | Signal | No. | Signal |
| 1 | STO1 Note 1 | 16 | DO4 |
| 2 | STO2 Note 1 | 17 | AI1+ |
| 3 | STO_COM | 18 | AI2+ |
| 4 | DI_COM | 19 | GND |
| 5 | DI1 | 20 | GND |
| 6 | DI2 | 21 | - |
| 7 | DI3 | 22 | - |
| 8 | DI4 | 23 | - |
| 9 | DI5 | 24 | - |
| 10 | DI6 | 25 | OCZ |
| 11 | DO_COM | 26 | GND |
| 12 | DO_24V | 27 | - |
| 13 | DO1 | 28 | - |
| 14 | DO2 | 29 | PE |
| 15 | DO3 | 30 | - |
| Note 1: only for STO model | | | |

## HX-E

EtherCAT

**Weight 0.082 KG**

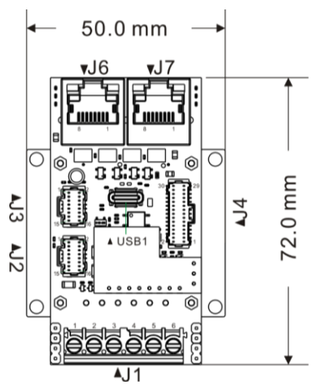


Main View

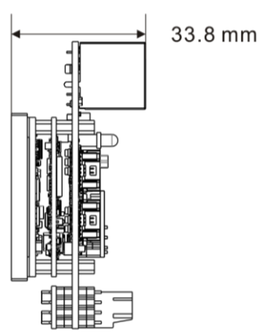


Left View

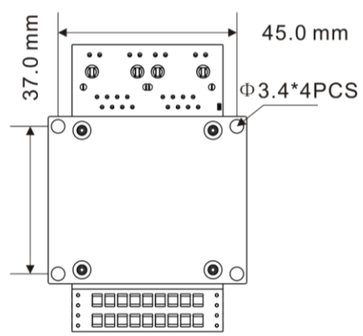


Back View

## HX-E***3

EtherCAT

**Weight 0.27KG**

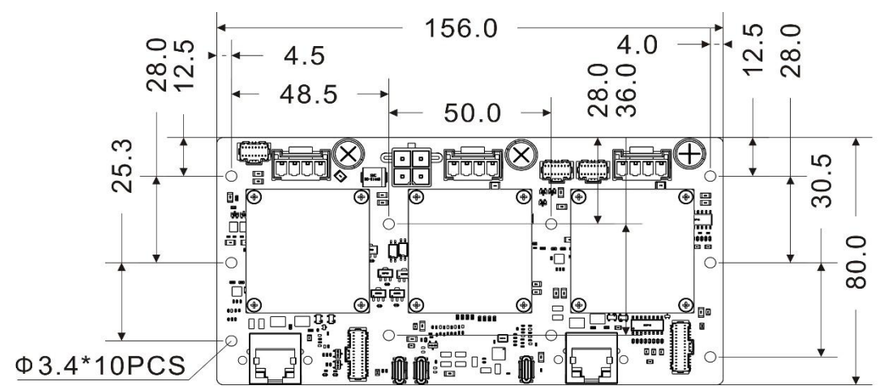


Main View

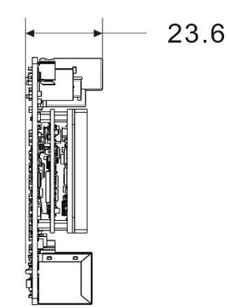


Left View

## HX-E***LP

EtherCAT

**Weight 0.080KG**

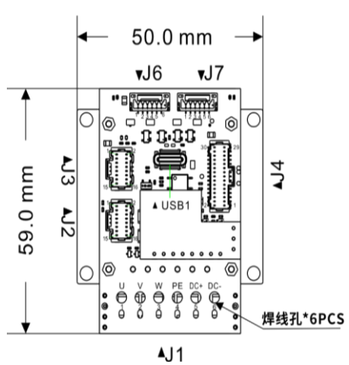


Main View

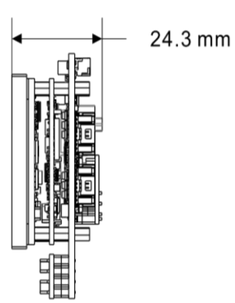


Left View

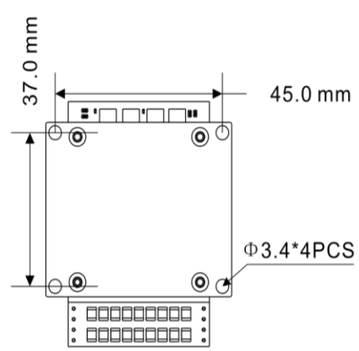


Back View

## HX-RC

CANopen Modbus

**Weight 0.07KG**

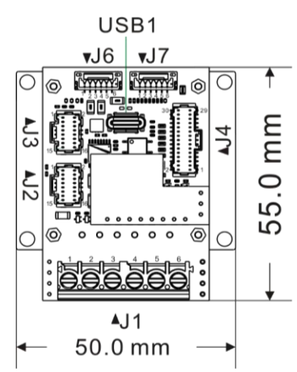


Main View

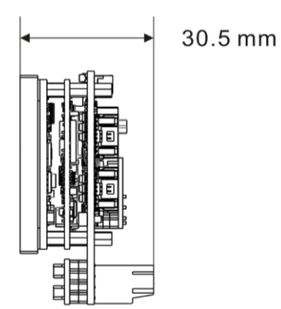


Left View

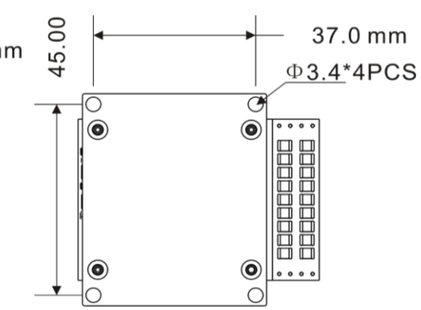


Back View

# Cable Assembly Specification



| Type | Flexibility | Model Number | Cable Assembly Specification 1 for HX servo drive |
|---|---|---|---|
| Multi-Turn Encoder Cable | Standard | SC-E32AB- | 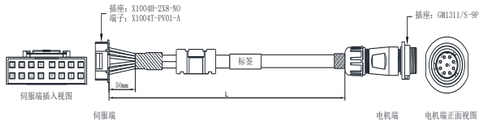 |
| | Highly Flexible Cable | SC-E32AH- | |
| Power Cable | Standard | SC-M2◇CB-□ | 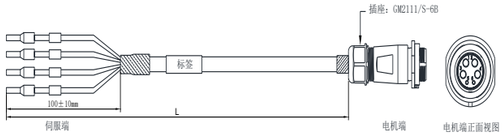 |
| | Highly Flexible Cable | SC-M2◇CH-□ | |
| Power Cable with brake line | Standard | SC-B2◇CB-□ | 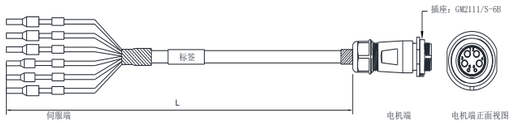 |
| | Highly Flexible Cable | SC-B2◇CH-□ | |

| 伺服端脚位 | 芯线颜色 | 电机端脚位 | 电池线 | | |
|---|---|---|---|---|---|
| 1 | 红 | 6 | | +5V | 双绞 |
| 2 | 橙 | 7 | | GND | |
| | 棕 | 3 | 红 | E+ | 双绞 |
| | 黑 | 4 | 黑 | E- | |
| 5 | 蓝 | 1 | | SD+ | 双绞 |
| 6 | 紫 | 2 | | SD- | |
| 15 | 屏蔽 | 9 | | PE | |

| 伺服端标记管 | 芯线颜色 | 电机端脚位 |
|---|---|---|
| U | 红 | 1 |
| V | 白 | 2 |
| W | 黑 | 3 |
| PE | 黄绿 | 4 |

| 伺服端标记管 | 芯线颜色 | 电机端脚位 |
|---|---|---|
| U | 红 | 1 |
| V | 白 | 2 |
| W | 黑 | 3 |
| PE | 黄绿 | 4 |
| BK+ | 棕 | 5 |
| BK- | 蓝 | 6 |

◇represents the current carrying level of power cable :

◇=1 represents the cable specification 1（18AWG）Rated current 5A

◇=4 represents the cable specification 4（15AWG）Rated current 10A

◇=5 represents the cable specification 5（13AWG）Rated current 20A

represents the length of cable: if =3.0, the length of cable is 3m.

General specification of power and encoder cables: 3.0m/5.0m/10.0m/15.0m

General specification of other cables: 0.3m/0.5m/1.0m/1.5m/2.0m

| | |
|---|---|
| EtherCAT network model number: SC-C2- | represents the length of cable: if =0.3，the length of cable is 0.3m.<br>General specification: 0.3m/0.5m/1.0m/1.5m/2.0m； |



| Type | Model Number | Cable Assembly Specification 2 for HX servo drive |
|---|---|---|
| Communication Cable used among HX-RC、HX-E-LP | SC-C31- | 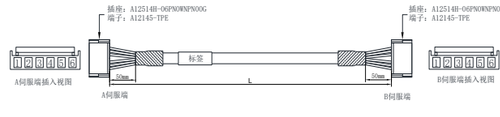 |
| Communication Cable(bare wire) used among HX-RC servo、HX-E-LP servo and PLC CAN/485 | SC-C40- | 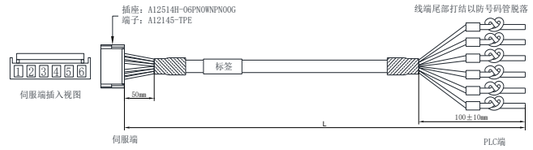 |
| Communication Cable(RJ45) used among HX-E-LP servo and PLC EtherCAT | SC-C41- | |
| HX Encoder Cable with the end bare | SC-E340B- | 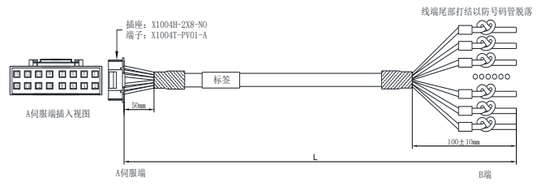 |
| HX IO Cable with Pin Terminal | SC-S610B- | 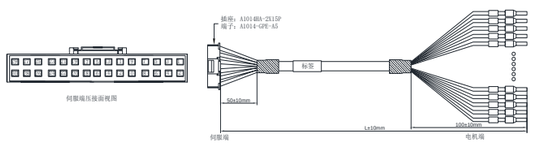 |

| A端脚位 | 芯线颜色 | B端脚位 | | |
|---|---|---|---|---|
| 3 | 橙 | 1 | TX+ | 双绞 |
| 4 | 橙白 | 2 | TX- | |
| 1 | 绿 | 3 | RX+ | 双绞 |
| 2 | 绿白 | 6 | RX- | |
| 6 | 屏蔽 | 外壳 | PE | |

| 伺服端脚位 | 芯线颜色 | 号码管定义 |
|---|---|---|
| 1 | 红 | RS485+ |
| 2 | 黑 | RS485- |
| 3 | 蓝 | CANL |
| 4 | 蓝黑 | CANH |
| 5 | 黄 | GND |
| 6 | 屏蔽 | PE |

| A伺服端脚位 | 芯线颜色 | B伺服端脚位 | HX-RC伺服 | HX-E-LP伺服 |
|---|---|---|---|---|
| 1 | 红 | 1 | RS485+ | RX+ |
| 2 | 黑 | 2 | RS485- | RX- |
| 3 | 蓝 | 3 | CANL | TX+ |
| 4 | 蓝黑 | 4 | CANH | TX- |
| 5 | 黄 | 5 | GND | - |
| 6 | 屏蔽 | 6 | PE | PE |

| 1 | 红 | +5V |
|---|---|---|
| 2 | 橙 | GND |
| 3 | 棕 | A+/CLK+ |
| 4 | 紫 | A-/CLK- |
| 5 | 黄 | B+/DATA+ |
| 6 | 黄黑 | B-/DATA- |
| 7 | 蓝 | Z+ |
| 8 | 蓝黑 | Z- |
| 9 | 黑 | HALL_U |
| 10 | 白 | HALL_V |
| 11 | 绿 | HALL_W |
| 15 | 屏蔽 | PE |

HUATRON
华创

# Smart Series
# HDC Low-Voltage Driver

Pulse Modbus CANopen EtherCAT

- DC24~60V

5A 25A

## Naming Rule

**HDC - E 005 D48 B**

① ② ③ ④ ⑤

| 1 | Product Series |
|---|---|
| HDC | Series |

| 2 | Command Type |
|---|---|
| E | EtherCAT |
| P | Pulse+RS485+CANopen |

| 3 | Rated Output Current |
|---|---|
| 005 | 5A |
| 015 | 15A |
| 025 | 25A |

| 4 | Voltage Specifications |
|---|---|
| D48 | DC 24~60V |

| 5 | Safety Function |
|---|---|
| B | built-in brake |
| BS | Brake+STO |

- **DC24~60V**

  5A 25A

- **The rated output current of HDC low-voltage servo drive ranges from 5A to 25A.**

Pulse+RS485+CANopen

| Current | HDC-P+B | HDC-P+Brake+STO |
|---|---|---|
| 5A | HDC-P005D48B | HDC-P005D48BS |
| 15A | HDC-P015D48B | HDC-P015D48BS |
| 25A | HDC-P025D48B | HDC-P025D48BS |

EtherCAT

| Current | HDC-E+B | HDC-E+Brake+STO |
|---|---|---|
| 5A | HDC-E005D48B | HDC-E005D48BS |
| 15A | HDC-E015D48B | HDC-E015D48BS |
| 25A | HDC-E025D48B | HDC-E025D48BS |

# All-around Champion!

The new generation of **HDC** DC low-voltage servo system supports pulse, CANopen, RS485 , and EtherCAT, flexibly adapted to various control systems. It supports A/B/Z increment encoder, Tamagawa absolute encoder, BISS-C, SSI, and other protocols type encoder.

It can drive different kinds of motors including PMSM, torque motors, linear motors, and voice coil motors. It applies to robotics, AGV, medical, and semiconductor industries.

PMSM | Torque Motor | Linear Motor | Voice Coil Motor

Digital Signal | Hall Sensor Dtection | BiSS-C | Tamagawa

Pulse | EtherCAT | Modbus | CANopen

EtherCAT® is owned by Beckhoff Automation GMBH. Other products, product names and trademarks or registered trademarks of products listed in this manual belong to each company and are not products of the Company.



## Wide Voltage Input

The drive can operate stably even when the supply voltage fluctuates between DC 24V and 60V, making it suitable for battery-powered applications such as AGVs.

Brake System

## Brake Control System

The **HDC** series servo system features a built-in servo brake control relay, allowing users to save on wiring costs and time while ensuring more reliable motor brake control.

## STO Safety Function

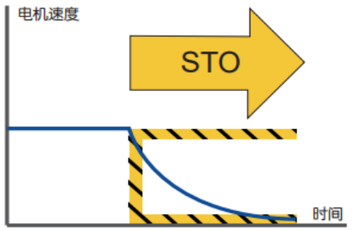


The STO function adopts a hardware dual-channel redundancy design and software verification mechanism.

In emergencies, once STO is activated, the drive's hardware protection circuit triggers, quickly cutting off the motor's current supply and stopping the motor operation, thereby ensuring the safety of personnel and equipment.

# Specification Configuration

| Functional Configuration | Modbus / CANopen | | EtherCAT | |
|---|---|---|---|---|
| | HDC-P+B | HDC-P+Brake+STO | HDC-E+B | HDC-E+Brake+STO |
| Pulse | √ | √ | - | - |
| RS485 | √ | √ | - | - |
| CANopen | √ | √ | - | - |
| EtherCAT | | | √ | √ |
| I/O | 3DI/2DO | 3DI/2DO | 3DI/2DO | 3DI/2DO |
| Built-in brake function | √ | √ | √ | √ |
| Analog | - | - | - | - |
| STO | - | 2 channels | - | 2 channels |
| A/B/Z linear encoder | √ | √ | √ | √ |
| BISS-C linear encoder | √ | √ | √ | √ |
| SSI linear encoder | √ | √ | √ | √ |
| Tamagawa absolute encoder | √ | √ | √ | √ |
| Hall Sensor Dtection | √ | √ | √ | √ |
| Resolver | - | - | - | - |
| Force Control Function | in development | in development | √ | √ |

## General Specifications

| Drive Model | HDC-□005D48 | HDC-□010D48 | HDC-□025D48 |
|---|---|---|---|
| Rated Output Current(Arms) | 5 | 15 | 25 |
| Max Output Current(Arms) | 10 | 30 | 50 |
| Supply Voltage Range | 24V-60VDC | | |

| Items | | Specifications |
|---|---|---|
| Conditions of Usage | Usage/Storage Temperature | 0～+40℃ / -20～+70℃ |
| | Usage/Storage Humidity | below 90%RH (Non-Condensing Conditions) |
| | Vibration/Shock resistance | 4.9m/s² / 19.6m/s² |
| | Pollution degree | PD2 |
| | Altitude | The maximum altitude is 5000 m.<br>● For altitudes not higher than 1000 m, derating is not required.<br>● For altitudes above 1000 m, derate 1% for every additional 100m.<br>● For altitudes above 2000 m, contact Huarton. |
| Built-in functions | Protective functions | Including protections against overcurrent, overvoltage, undervoltage, overload, locked rotor, main circuit detection error, heatsink overtemperature, overspeed encoder error, and parameter error |
| | Connection device | USB |
| | Usability functions | Easy-to-use tuning interface, motor parameter configuration, adaptive parameter tuning, expert tuning, Speed Loop, Position Loop, Current Loop tuning and operation functions, Zero-Point Calibration (Angle Identification), and more. |
| Performance | Dynamic characteristics of current loop | Step response: 187.5μs(0~100%)<br>Sin/cos response:<br>-3dB amplitude attenuation bandwidth, 2000Hz(command signal: ±25%);<br>-90°phase shift bandwidth, 3500Hz (command signal: ±25%); |
| | Speed control tange | 0~12000rpm<br>For speed above 6000 rpm, contact Huarton. |
| | Dynamic characteristics of velocity loop | Step response: 562.5μs(0~1000rpm)<br>Sin/Cos response:<br>-3dB amplitude attenuation bandwidth, 1000Hz(command signal: ±25%);<br>-90°phase shift bandwidth, 630Hz(command signal: ±500rpm) |
| | Torque control precision | ±2% |

| Communication Connector | | | | | |
|---|---|---|---|---|---|
| CN1A (IN) | | | CN1B (OUT) | | |
| No. | CANopen | RS485 | No. | CANopen | RS485 |
| 1 | CANH | - | 1 | CANH | - |
| 2 | CANL | - | 2 | CANL | - |
| 3 | GND | GND | 3 | GND | GND |
| 4 | - | RS485+ | 4 | - | RS485+ |
| 5 | - | RS485- | 5 | - | RS485- |
| 6 | - | - | 6 | - | - |
| 7 | - | - | 7 | - | - |
| 8 | GND | GND | 8 | GND | GND |

| CN6 STO Connector Note 1 | |
|---|---|
| No. | Signal |
| 1 | STO1+ |
| 2 | STO1- |
| 3 | STO2+ |
| 4 | STO2- |
| Note 1: only for STO model | |

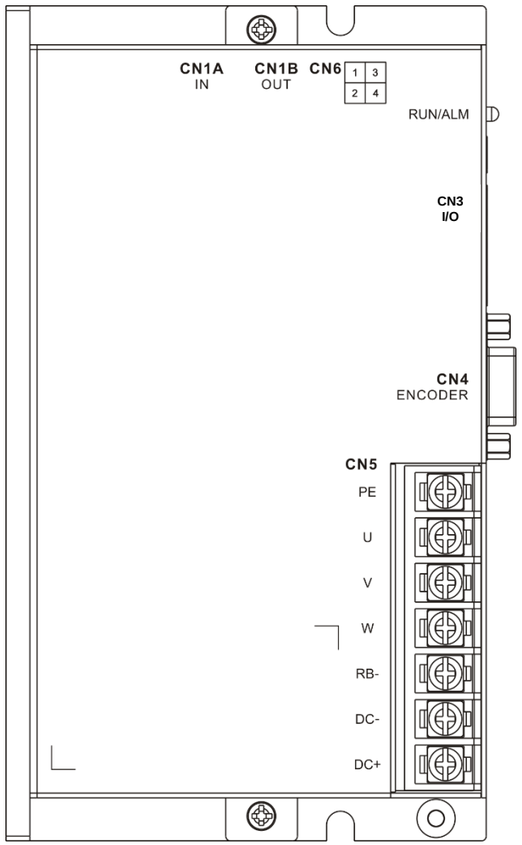


| CN3I/O Connector | | | |
|---|---|---|---|
| No. | Signal | No. | Signal |
| 1 | PUL+ | 8 | COMI |
| 2 | PUL- | 9 | DI1 |
| 3 | DIR+ | 10 | DI2 |
| 4 | DIR- | 11 | DI3 |
| 5 | BK+ | 12 | COMO |
| 6 | BK- | 13 | DO1 |
| 7 | PULLHI | 14 | DO2 |

| No. | CN4 Encoder Connector | | | |
|---|---|---|---|---|
| | ABZ | BISS | Hall Sensor | Tamagawa absolute encoder |
| 1 | 5V | 5V | 5V | 5V |
| 2 | GND | GND | GND | GND |
| 3 | - | - | - | - |
| 4 | - | - | HALL U | - |
| 5 | - | - | HALL GND | - |
| 6 | Z+ | CLK+ | - | - |
| 7 | B+ | - | - | - |
| 8 | A+ | - | - | - |
| 9 | - | - | HALL W | - |
| 10 | - | - | HALL V | - |
| 11 | Z- | CLK- | - | - |
| 12 | B- | - | - | - |
| 13 | A- | - | - | - |
| 14 | - | DATA+ | - | SD+ |
| 15 | - | DATA- | - | SD- |

| CN5 Power Connector | |
|---|---|
| No. | Signal |
| PE | Servo Motor U, V, W Three-Phase Output Terminals and Motor PE Terminal |
| U | |
| V | |
| W | |
| RB- | External Regenerative Resistor Input Terminal |
| DC- | Power Input Negative Terminal |
| DC+ | Power Input Positive Terminal and External, Regenerative Resistor Input Terminal |

| EtherCAT Communication Connector | | | |
|---|---|---|---|
| CN1A (IN) | | CN1B (OUT) | |
| No. | Signal | No. | Signal |
| 1 | TX+ | 1 | TX+ |
| 2 | TX- | 2 | TX- |
| 3 | RX+ | 3 | RX+ |
| 4 | - | 4 | - |
| 5 | - | 5 | - |
| 6 | RX- | 6 | RX- |
| 7 | - | 7 | - |
| 8 | - | 8 | - |

| CN6 STO Connector Note 1 | |
|---|---|
| No. | Signal |
| 1 | STO1+ |
| 2 | STO1- |
| 3 | STO2+ |
| 4 | STO2- |
| Note 1: only for STO model | |

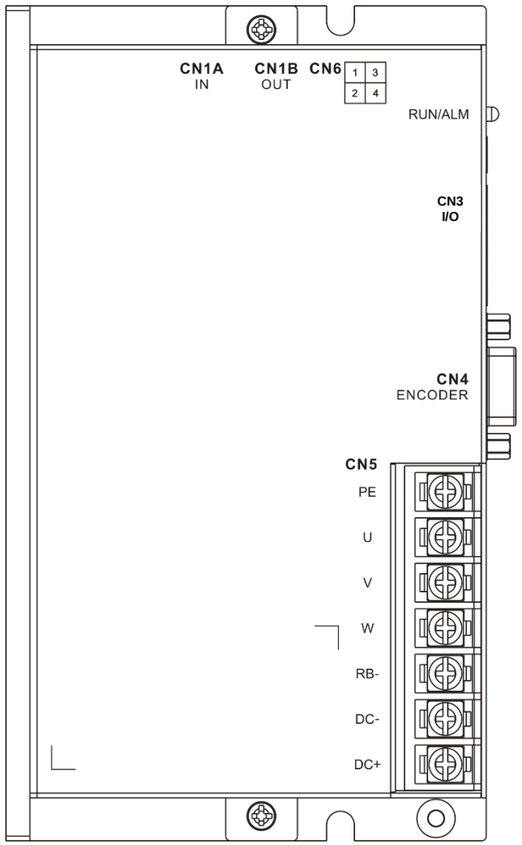


| CN3I/O Connector | | | |
|---|---|---|---|
| No. | Signal | No. | Signal |
| 1 | - | 8 | COMI |
| 2 | - | 9 | DI1 |
| 3 | - | 10 | DI2 |
| 4 | - | 11 | DI3 |
| 5 | BK+ | 12 | COMO |
| 6 | BK- | 13 | DO1 |
| 7 | - | 14 | DO2 |

| No. | CN4 Encoder Connector | | | |
|---|---|---|---|---|
| | ABZ | BISS | Hall Sensor | Tamagawa absolute encoder |
| 1 | 5V | 5V | 5V | 5V |
| 2 | GND | GND | GND | GND |
| 3 | - | - | - | - |
| 4 | - | - | HALL U | - |
| 5 | - | - | HALL GND | - |
| 6 | Z+ | CLK+ | - | - |
| 7 | B+ | - | - | - |
| 8 | A+ | - | - | - |
| 9 | - | - | HALL W | - |
| 10 | - | - | HALL V | - |
| 11 | Z- | CLK- | - | - |
| 12 | B- | - | - | - |
| 13 | A- | - | - | - |
| 14 | - | DATA+ | - | SD+ |
| 15 | - | DATA- | - | SD- |

| CN5 Power Connector | |
|---|---|
| No. | Signal |
| PE | Servo Motor U, V, W Three-Phase Output Terminals and Motor PE Terminal |
| U | |
| V | |
| W | |
| RB- | External Regenerative Resistor Input Terminal |
| DC- | Power Input Negative Terminal |
| DC+ | Power Input Positive Terminal and External, Regenerative Resistor Input Terminal |

# External Dimensions

**Weight 0.66 KG**

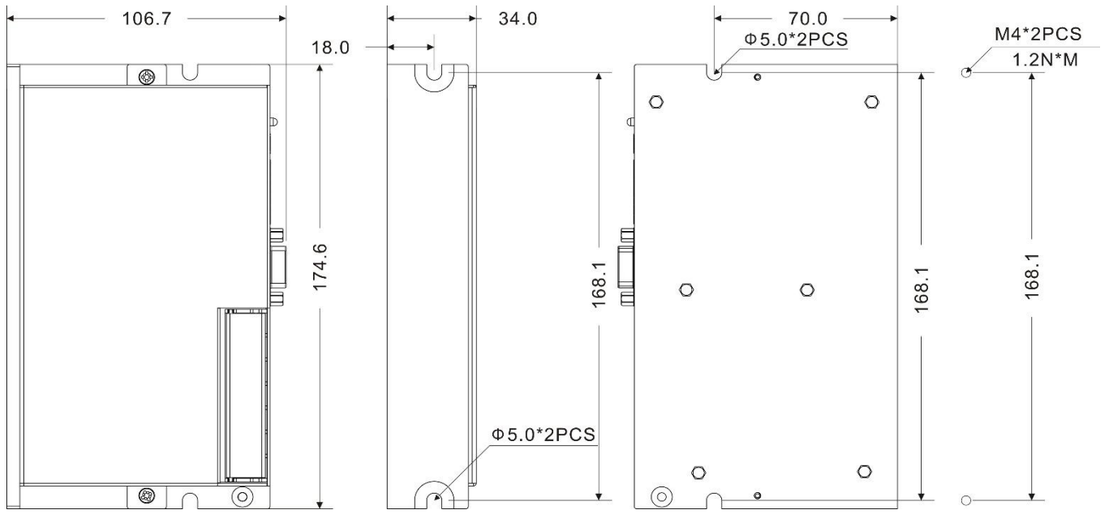


Main View　　Left View　　Back View　　Mounting Hole Diagram

| Type | Flexibility | Model Number | Cable Assembly Specification for HDC servo drive |
|---|---|---|---|
| Multi-Turn Encoder Cable | Standard | SC-E42AB- | 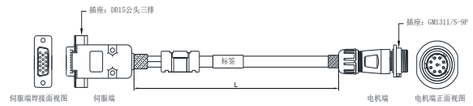 |
| | Highly Flexible Cable | SC-E42AH- | |
| Power Cable | Standard | SC-M4◇CB- | 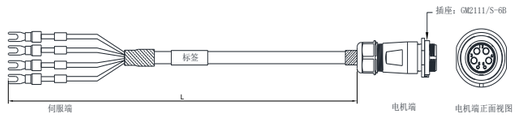 |
| | Highly Flexible Cable | SC-M4◇CH- | |
| Power Cable with brake line | Standard | SC-B4◇CB- | 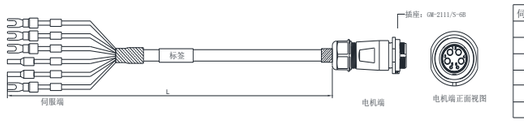 |
| | Highly Flexible Cable | SC-B4◇CH- | |

◇represents the current carrying level of power cable :

◇=1 represents the cable specification 1（18AWG）Rated current 3A

◇=4 represents the cable specification 4（15AWG）Rated current 6.5A

◇=5 represents the cable specification 5（13AWG）Rated current 10A

represents the length of cable: if =3.0, the length of cable is 3m. General specification of cables: 3.0m/5.0m/10.0m

| Other accessories | |
|---|---|
| EtherCAT network model number: SC-C2- | represents the length of cable: if =0.3, the length of cable is 0.3m. General specification: 0.3m/0.5m/1.0m/1.5m/2.0m； |

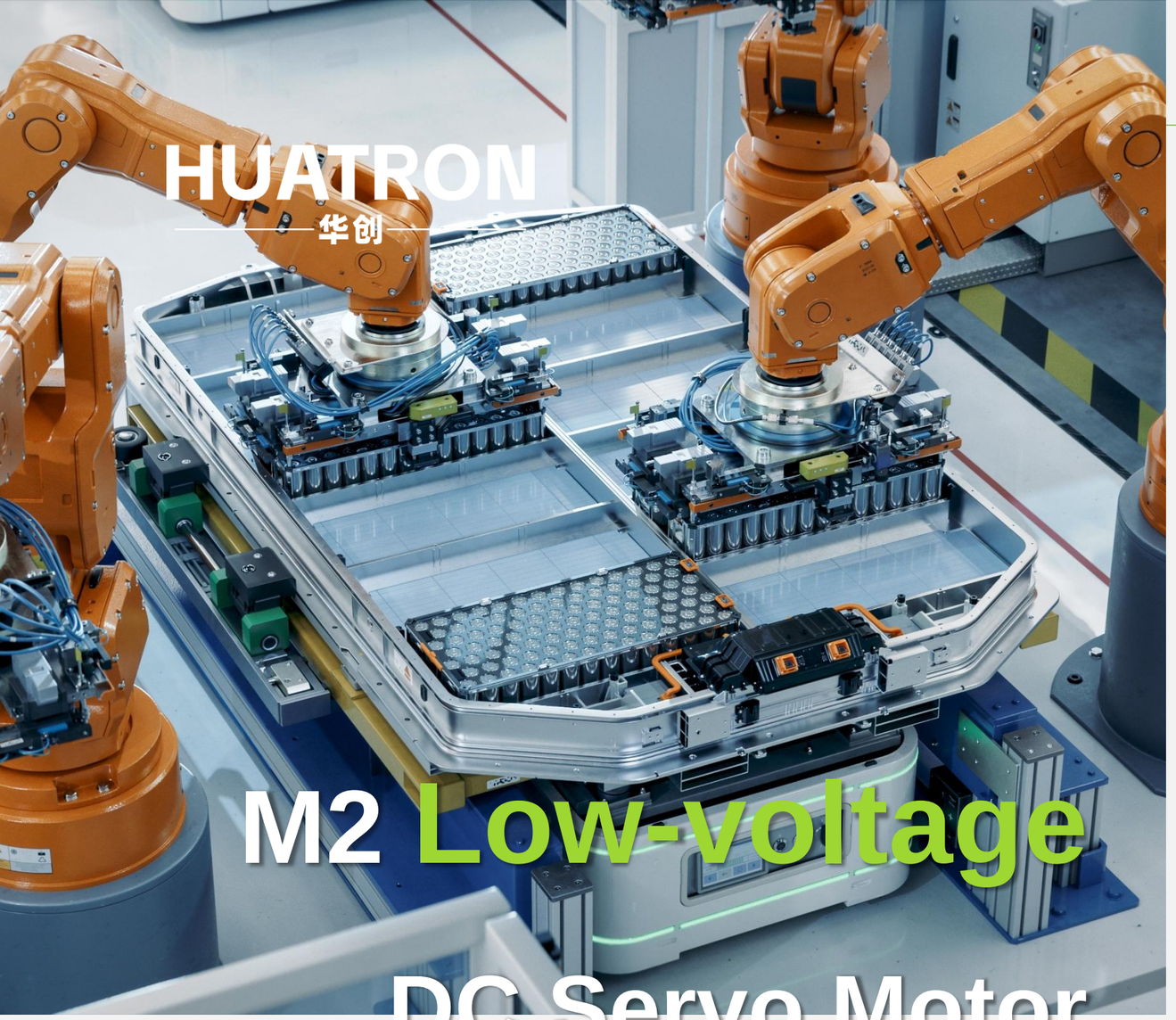


# M2 Low-voltage DC Servo Motor

- **DC24V** 50W – 400W
- **DC48V** 200W – 1000W

- **M2** Servo Motor Power Range: 50W to 1000W



## Naming Rule

**M2 - H 080 - 48D 75B 30C - M C 1 N 1**

① ② ③ ④ ⑤ ⑥ ⑦ ⑧ ⑨ ⑩ ⑪

| 1 | Product Series |
|---|---|
| M2 | Series |

| 2 | Motor Inertia |
|---|---|
| H | High Inertia |

| 3 | Motor Flange |
|---|---|
| 040 | 40mm |
| 060 | 60mm |
| 080 | 80mm |

| 4 | Voltage Specifications |
|---|---|
| 24D | DC24V |
| 48D | DC48V |

| 5 | Rated Power |
|---|---|
| 05B | 50W |
| 10B | 100W |
| 20B | 200W |
| 40B | 400W |
| 75B | 750W |
| 10C | 1000W |

| 6 | Rated Speed |
|---|---|
| 30C | 3000rpm |

| 7 | Encoder Type |
|---|---|
| N | 17bit Multi-Turn Absolute |
| P | 23bit Multi-Turn Absolute |

| 8 | Wiring Type |
|---|---|
| C | Cable |

| 9 | Shaft Type |
|---|---|
| 0 | Smooth Shaft |
| 1 | Keyway Shaft |

| 10 | Brake |
|---|---|
| N | none |
| B | Brake |

| 11 | Oil Seal |
|---|---|
| 0 | none |
| 1 | Oil Seal |

## Technical Specifications of Low-Voltage Servo Motor **M2H040** 24V/50W-100W

| Items | M2H040-24D05B30C-xxxxx | M2H040-24D10B30C-xxxxx |
|---|---|---|
| Rated Power (W) | 50 | 100 |
| Rated Voltage (V) | 24 | 24 |
| Rated Current (A) | 3.5 | 6.5 |
| Peak Current (A) | 7 | 13 |
| Rated Speed (r/min) | 3000 | 3000 |
| Peak Speed (r/min) | 3200 | 3200 |
| Rated Torque (N·m) | 0.16 | 0.32 |
| Peak Torque (N·m) | 0.32 | 0.64 |
| Back EMF (V/krpm) | 3.5 | 3.2 |
| Torque Constant (N·m/A) | 0.05 | 0.05 |
| Electrical Time Constant (ms) | 0.77 | 0.95 |
| Rotor Inertia (kg·m²×10⁻⁴) | 0.03 (0.035) | 0.05 (0.053) |
| Weight (kg) | 0.4(0.9) | 0.5(1) |
| Brake Power / Brake Current | | |
| Torque Characteristics | 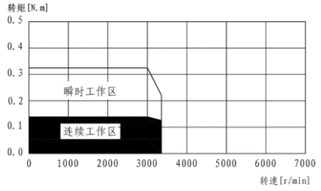  | 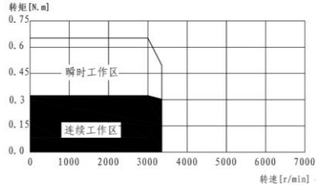  |
| Motor Insulation Class | F | |
| Motor Insulation Class | IP65 | |
| Operating Environment | Ambient Temperature: -20℃ to 40℃<br>Ambient Humidity: Relative Humidity < 90% (Non-Condensing Conditions) | |

Note: Parameters in parentheses are for motors with holding brakes.

- **Installation Dimensions (mm)**

| Dimension Diagram | 50W | 100W |
|---|---|---|
| L (Without Brake) | 68.5 | 79.5 |
| L (With Brake) | 101.5 | 112.5 |

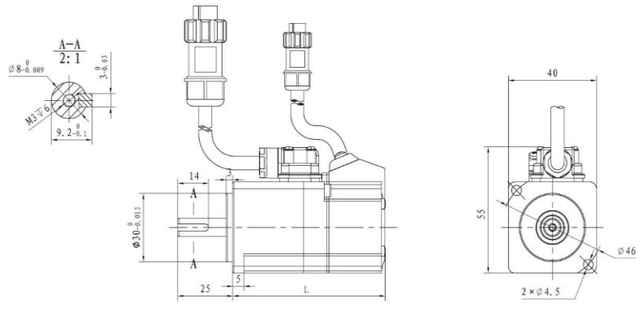


## Technical Specifications of Low-Voltage Servo Motor **M2H040** 24V/50W-100W

| Rated Power | Inertia | Model Number | 23bit multi-turn | 17bit multi-turn | Brake | Oil seal | Flange | Shaft Diameter | Wiring Type | Adapt servo type |
|---|---|---|---|---|---|---|---|---|---|---|
| 50W | High Inertia | M2H040-24D05B30C-NC1N0 | | ● | | | 40 | Φ8 | Cable | HDC-E005D48B<br>HDC-P005D48B<br>HX-E005D48<br>HX-E005D48-LP<br>HX-E005D48-3<br>HX-RC005D48 |
| | | M2H040-24D05B30C-PC1N0 | ● | | | | | | | |
| | | M2H040-24D05B30C-NC1B0 | | ● | ● | | | | | |
| | | M2H040-24D05B30C-PC1B0 | ● | | | | | | | |
| 100W | High Inertia | M2H040-24D10B30C-NC1N0 | | ● | | | 40 | Φ8 | Cable | HDC-E015D48B<br>HDC-P015D48B<br>HX-E010D48<br>HX-E010D48-LP<br>HX-RC010D48 |
| | | M2H040-24D10B30C-PC1N0 | ● | | | | | | | |
| | | M2H040-24D10B30C-NC1B0 | | ● | ● | | | | | |
| | | M2H040-24D10B30C-PC1B0 | ● | | | | | | | |

## Technical Specifications of Low-Voltage Servo Motor **M2H060** 24V/200-400W

| Items | M2H060-24D20B30C-xxxxx | M2H060-24D40B30C-xxxxx |
|---|---|---|
| Rated Power (W) | 200 | 400 |
| Rated Voltage (V) | 24 | 24 |
| Rated Current (A) | 12 | 20 |
| Peak Current (A) | 36 | 60 |
| Rated Speed (r/min) | 3000 | 3000 |
| Peak Speed (r/min) | 3200 | 3200 |
| Rated Torque (N·m) | 0.637 | 1.27 |
| Peak Torque (N·m) | 1.91 | 3.81 |
| Back EMF (V/krpm) | 3.85 | 3.9 |
| Torque Constant (N·m/A) | 0.053 | 0.064 |
| Electrical Time Constant (ms) | 1.58 | 1.7 |
| Rotor Inertia (kg·m²×10⁻⁴) | 0.29(0.31) | 0.53(0.56) |
| Weight (kg) | 1.0(1.7) | 1.4(2.1) |
| Brake Power / Brake Current | | |
| Torque Characteristics | 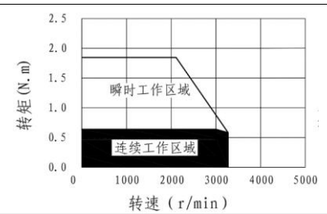  | 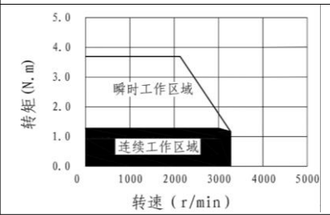  |
| Motor Insulation Class | F | |
| Motor Insulation Class | IP65 | |
| Operating Environment | Ambient Temperature: -20℃ to 40℃<br>Ambient Humidity: Relative Humidity < 90% (Non-Condensing Conditions) | |

Note: Parameters in parentheses are for motors with holding brakes.

- **Installation Dimensions (mm)**

| Dimension Diagram | 200W | 400W |
|---|---|---|
| L (Without Brake) | 77.2 | 93.7 |
| L (With Brake) | 109.2 | 125.7 |

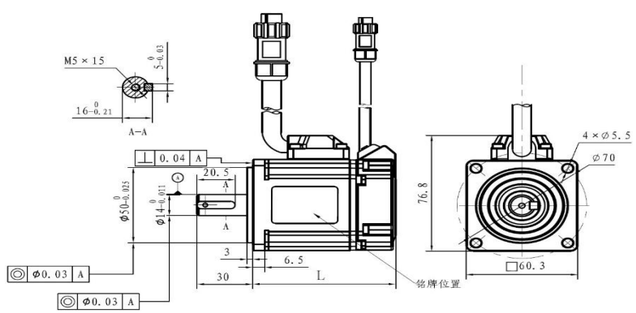


## Technical Specifications of Low-Voltage Servo Motor **M2H060** 24V/200-400W

| Rated Power | Inertia | Model Number | 23bit multi-turn | 17bit multi-turn | Brake | Oil seal | Flange | Shaft Diameter | Wiring Type | Adapt servo type |
|---|---|---|---|---|---|---|---|---|---|---|
| 200W | High Inertia | M2H060-24D20B30C-NC1N0 | | ● | ● | | 60 | Φ14 | Cable | HDC-E025D48B<br>HDC-P025D48B<br>HX-E025D48<br>HX-E025D48-LP<br>HX-RC025D48 |
| | | M2H060-24D20B30C-PC1N0 | ● | | | | | | | |
| | | M2H060-24D20B30C-NC1B0 | | ● | | | | | | |
| | | M2H060-24D20B30C-PC1B0 | ● | | | | | | | |
| 400W | High Inertia | M2H060-24D40B30C-NC1N0 | | ● | ● | | 60 | Φ14 | Cable | HDC-E025D48B<br>HDC-P025D48B<br>HX-E025D48<br>HX-E025D48-LP<br>HX-RC025D48 |
| | | M2H060-24D40B30C-PC1N0 | ● | | | | | | | |
| | | M2H060-24D40B30C-NC1B0 | | ● | | | | | | |
| | | M2H060-24D40B30C-PC1B0 | ● | | | | | | | |

## Technical Specifications of Low-Voltage Servo Motor **M2H060** 48V/200-400W

| Items | M2H060-48D20B30C-xxxxx | M2H060-48D40B30C-xxxxx |
|---|---|---|
| Rated Power (W) | 200 | 400 |
| Rated Voltage (V) | 48 | 48 |
| Rated Current (A) | 6 | 10 |
| Peak Current (A) | 18 | 30 |
| Rated Speed (r/min) | 3000 | 3000 |
| Peak Speed (r/min) | 3200 | 3200 |
| Rated Torque (N·m) | 0.637 | 1.27 |
| Peak Torque (N·m) | 1.91 | 3.81 |
| Back EMF (V/krpm) | 7.7 | 7.8 |
| Torque Constant (N·m/A) | 0.106 | 0.127 |
| Electrical Time Constant (ms) | 1.77 | 1.8 |
| Rotor Inertia (kg·m²×10⁻⁴) | 0.29(0.31) | 0.53(0.56) |
| Weight (kg) | 1.0(1.7) | 1.4(2.1) |
| Brake Power / Brake Current | | |
| Torque Characteristics | 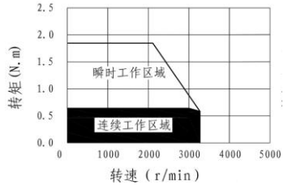  | 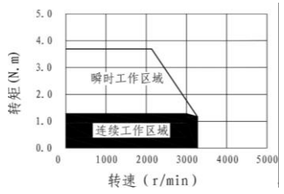  |
| Motor Insulation Class | F | |
| Motor Insulation Class | IP65 | |
| Operating Environment | Ambient Temperature: -20℃ to 40℃<br>Ambient Humidity: Relative Humidity < 90% (Non-Condensing Conditions) | |

Note: Parameters in parentheses are for motors with holding brakes.

- **Installation Dimensions (mm)**

| Dimension Diagram | 200W | 400W |
|---|---|---|
| L (Without Brake) | 77.2 | 93.7 |
| L (With Brake) | 109.2 | 125.7 |

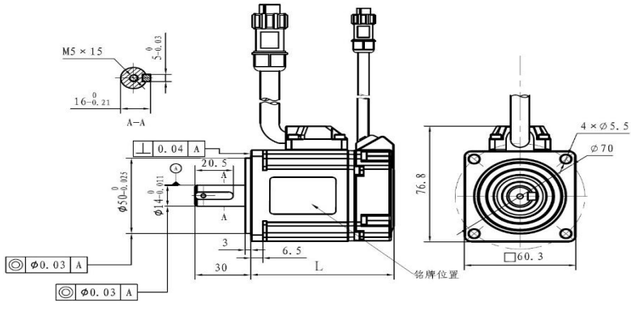


## Technical Specifications of Low-Voltage Servo Motor **M2H060** 48V/200-400W

| Rated Power | Inertia | Model Number | 23bit multi-turn | 17bit multi-turn | Brake | Oil seal | Flange | Shaft Diameter | Wiring Type | Adapt servo type |
|---|---|---|---|---|---|---|---|---|---|---|
| 200W | High Inertia | M2H060-48D20B30C-NC1N0 | | ● | | | 60 | Φ14 | Cable | HDC-E025D48B<br>HDC-P025D48B<br>HX-E025D48<br>HX-E025D48-LP<br>HX-RC025D48 |
| | | M2H060-48D20B30C-PC1N0 | ● | | | | | | | |
| | | M2H060-48D20B30C-NC1B0 | | ● | ● | | | | | |
| | | M2H060-48D20B30C-PC1B0 | ● | | | | | | | |
| 400W | High Inertia | M2H060-48D40B30C-NC1N0 | | ● | | | 60 | Φ14 | Cable | HDC-E025D48B<br>HDC-P025D48B<br>HX-E025D48<br>HX-E025D48-LP<br>HX-RC025D48 |
| | | M2H060-48D40B30C-PC1N0 | ● | | | | | | | |
| | | M2H060-48D40B30C-NC1B0 | | ● | ● | | | | | |
| | | M2H060-48D40B30C-PC1B0 | ● | | | | | | | |

## Technical Specifications of Low-Voltage Servo Motor **M2H080** 48V/750-1000W

| Items | M2H080-48D75B30C-xxxxx | M2H080-48D10C30C-xxxxx |
|---|---|---|
| Rated Power (W) | 750 | 1000 |
| Rated Voltage (V) | 48 | 48 |
| Rated Current (A) | 20 | 25 |
| Peak Current (A) | 40 | 50 |
| Rated Speed (r/min) | 3000 | 3000 |
| Peak Speed (r/min) | 3200 | 3200 |
| Rated Torque (N·m) | 2.4 | 3.2 |
| Peak Torque (N·m) | 4.8 | 6.4 |
| Back EMF (V/krpm) | 8 | 8 |
| Torque Constant (N·m/A) | 0.13 | 0.13 |
| Electrical Time Constant (ms) | 3.4 | 3.4 |
| Rotor Inertia (kg·m²×10⁻⁴) | 1.62(1.72) | 2.1(2.2) |
| Weight (kg) | 2.5(3.5) | 3.2(4.2) |
| Brake Power / Brake Current | | |
| Torque Characteristics | 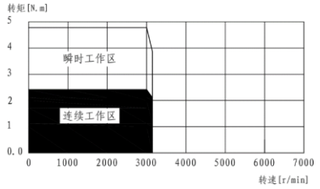  | 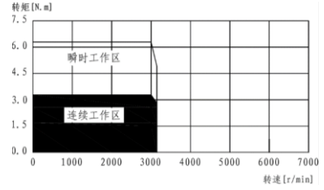  |
| Motor Insulation Class | F | |
| Motor Insulation Class | IP65 | |
| Operating Environment | Ambient Temperature: -20℃ to 40℃<br>Ambient Humidity: Relative Humidity < 90% (Non-Condensing Conditions) | |

Note: Parameters in parentheses are for motors with holding brakes.

- **Installation Dimensions (mm)**

| Dimension Diagram | 750W | 1000W |
|---|---|---|
| L (Without Brake) | 105 | 119 |
| L (With Brake) | 142 | 156 |

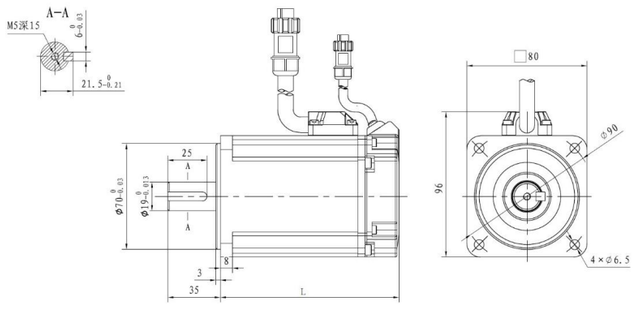


## Technical Specifications of Low-Voltage Servo Motor **M2H080** 48V/750-1000W

| Rated Power | Inertia | Model Number | 23bit multi-turn | 17bit multi-turn | Brake | Oil seal | Flange | Shaft Diameter | Wiring Type | Adapt servo type |
|---|---|---|---|---|---|---|---|---|---|---|
| 750W | High Inertia | M2H080-48D75B30C-NC1N0 | | ● | | | 80 | Φ19 | Cable | HDC-E025D48B<br>HDC-P025D48B<br>HX-E025D48<br>HX-E025D48-LP<br>HX-R025D48 |
| | | M2H080-48D75B30C-PC1N0 | ● | | | | | | | |
| | | M2H080-48D75B30C-NC1B0 | | ● | ● | | | | | |
| | | M2H080-48D75B30C-PC1B0 | ● | | | | | | | |
| 1000W | High Inertia | M2H080-48D10C30C-NC1N0 | | ● | | | 80 | Φ19 | Cable | HDC-E025D48B<br>HDC-P025D48B<br>HX-E025D48<br>HX-E025D48-LP<br>HX-RC025D48 |
| | | M2H080-48D10C30C-PC1N0 | ● | | | | | | | |
| | | M2H080-48D10C30C-NC1B0 | | ● | ● | | | | | |
| | | M2H080-48D10C30C-PC1B0 | ● | | | | | | | |

## Connector Cable Definition of Low-Voltage Servo Motor M2 Series

| Encoder Connector | | Power Cable | | Power Cable (with brake) | |
|---|---|---|---|---|---|
| 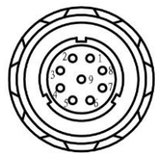 | | | | | |
| GM - 1310/P-9 motor side | | GM - 2110/P-6 motor side | | GM - 2110/P-6 motor side | |
| No. | Function | No. | Function | No. | Function |
| 1 | SD+ | 1 | U | 1 | U |
| 2 | SD- | 2 | V | 2 | V |
| 3 | E + | 3 | W | 3 | W |
| 4 | E - | 4 | PE | 4 | PE |
| 5 | - | 5 | - | 5 | Bk+ |
| 6 | 5 V | 6 | - | 6 | Bk- |
| 7 | 0 V- | | | | |
| 8 | - | | | | |
| 9 | PE | | | | |

HUATRON
华创

# Specialized in
# Control + Drive

**2+**
**R&D Centers**

**20+**
**Technical Patents**

**5+**
**4S Service Centers**

**Shenzhen Huatron Technology Co., Ltd.,** established in 2017, is a R&D enterprise specialized in the core components and related software systems in the industrial automation.

The team's R&D capabilities are at the leading level in industrial control industry, including core algorithms, software architecture, hardware design... The **original unified-drive-technology development platform** has realized the diversification of servo products and the standardization of development, which can quickly meet the subdivision application development needs of the industry market!

At the same time, Huatron innovatively introduced the "**4S**" service concept of "**customer - centered**" from automobile enterprises. Countrywide service systems can provide our users with product sales and professional technical services including **Solution** (industry solutions), **Sale** (product sales), **Service** (after - sales maintenance), **School** (product training), etc., and jointly promote the upgrading of the industrial automation industry!