PUBANG

环形电感式接近开关
Ring Inductive Proximity Sensor

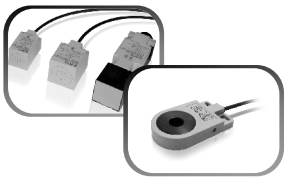

功能特点/ Features

- 灵敏度可调节，分辨率高，响应时间短
- Adjustable sensitivity, high resolution, quick response
- 适用于断线检测、部件阻塞检测以及检测小的和快速运动的部件
- Suitable for detecting broken line,parks blocked, small and fast moving parts
- 具有短路保护、过载保护及逆极性保护功能
- Short circuit protection, load current protection and reversed polarity protection



简要介绍 Brief–introduction / C–01

CR3,CR5 –出线式 CR3,CR5 –CABLE / C–02

CR6.5,CR8–出线式 CR6.5,CR8 –CABLE / C–03

CR10,CR12–出线式 CR10,CR12–CABLE / C–04

CR15.5,CR16 –出线式 CR15.5,CR16 –CABLE / C–05

CR20,CR22 –出线式 CR20,CR22–CABLE / C–06

CR25 –出线式 CR25 –CABLE / C–07

CE

环形开关的特性

环形接近传感器的感应装置就在其环形物中。当有金属的物体通过此环形物时，感应器便产生作用。特别适合用于检测细小的金属物体,列如螺丝钉、螺帽、垫圈等。以及连续金属线的断裂检测。感应器的外罩是塑料制。

Characteristics

In ring sensors, sensing is made within the ring itself. The sensors is activated when a metallic object is introduced within it. They are particularly suitable for applications where detection of small metal objects such as screws, nuts, washers etc...is requested and also for break detection of continuos metal wires that pass through it.

金属接近感应区域的影响

如果有移动的金属零件靠近感应区域时，感应功能可能会被干扰。为了避免此情况发生，在装置时，请于金属物体保持一定的距离，以确保不会干扰到感应功能。

Effects of metal in the close vicinity

If a moving metal part is close to the sensing area the functioning can be disturbed, In Order to avoid this, install the units some distance from metallic object, Ensure that this dose not interfere with the functioning.

传感器之间的最小距离/Minimum distance between sensors

型号/Model	N03	N05	N6.5	N08	N10	N12	N15.5	N16	N20	N22	N25
A(Fig.1)mm	15	25	40	50	60	60	100	120	150	150	150
B(Fig.2)mm	10	10	10	10	10	20	50	60	70	80	80

Fig.1

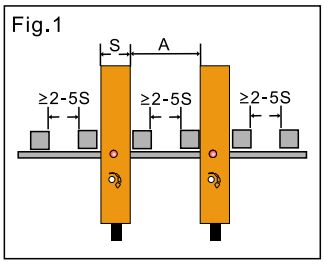

Fig.2

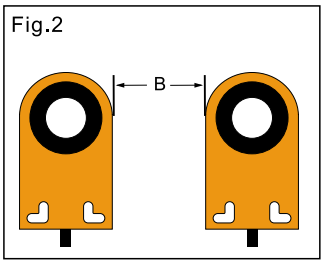

感应器的使用

通过感应器的每件物体，其间隔距离，建议要有两个感应器宽度的距离。如果超过一个以上的感应器，被装置在临近区域，相互间距离，建议遵守如附表所示的最小距离。

Use of sensor

A distance equal to the width of two sensor should be left between each object that passes through the sensor. If more than one sensor is to be installed in close vicinity, the minimum distance indicated between sensors should be observed.

环形光电感应器的选择

依据最小洞径做选择。如此敏锐性的调整可以在正常值内，而不会有不正当运作的风险。

Selection of ring sensor

Selection should be made based on the minimum hole diameter required. In this way the sensitivity adjustment can be made within normal parameters.

型号/Model	N03	N05	N6.5	N08	N10	N12	N15.5	N16	N20	N22	N25
长度/Length mm	1	1	1	2	2	2	2	2	3	3	3
直径/Diameter mm	0.7	1	1.2	1.2	1.5	1.5	1.8	1.8	2.5	2.5	3.0

动作频率

环形接近感应器的切换频率取决于被测物通过时延迟的脉冲时间，并依据以下公式：

$$\text{切换频率 (Hz)} = \frac{1}{(\text{T 脉冲} + 1)\ \text{ms}}$$

同理证，切换频率将如右侧图表。

Switching frequency

The switch frequency of inductive ring sensors depends on delayed im pulse time(when inserted)according to the formula:

$$\text{Switching frequency (Hz)} = \frac{1}{(\text{T impulse} + 1)\ \text{ms}}$$

Vice versa, switching frequency will be as per chart beside.

型号/Model	Sw. Frequence hz(min.~max.)
N03 N05 N6.5 N08	600~1000
N10 N12 N15.5 N16	500~800
N20 N22 N25	400~600

图 片
PICTURE

	φ3.0	φ5.0
		
直流-4线/DC-4 wires NPN N.O.+N.C.	IPSCR-N03NC-D4Y2	IPSCR-N05NC-D4Y2
直流-4线/DC-4 wires PNP N.O.+N.C.	IPSCR-N03PC-D4Y2	IPSCR-N05PC-D4Y2
检测孔直径/Sensing hole diameter	3mm	5mm
最小检测物/Min. detecting object	φ1x0.7mm min.	φ1x1mm min.
工作电压/Supply voltage	DC12...24V (10...30V DC) 允许波动10%以下/ripple(p-p):10% max.	
高速延时输出/High speed delay output	输出延时100ms/ The output delay 100 ms	
消耗电流/Consumption	<10mA	
负载电流/Load current	<150mA at DC:24V	
电压降/Voltage drop(V_p)	<3V (负载电流/Load current: 150mA)	
LED 显示/Display	红色/Red LED	
保护/Protection Circuit	短路保护、反极性保护、过载保护/Short circuit protection, reversed polarity protection and overload protection	
工作温度/Operating temperature	-25...+70°C (未结露状态) / -25...+70°C(no condensation)	
抗冲击/Anti-impact	500m/s²(50G) X、Y、Z 方向各10次/500m/s²(50G) X、Y、Z direction, each 10 times	
抗震动/Anti-vibration	10...55Hz (振幅1.5mm) X、Y、Z 方向各2小时/10...55Hz(amplitude 1.5mm)X、Y、Z direction each 2 hours	
防护等级/Protection	IP65	
连接方式/Connection	电缆线2M，外径φ4mm/Cable: φ4mm 2M	
外壳材料/Housing material	PBT	

尺寸图
Dimensional drawing

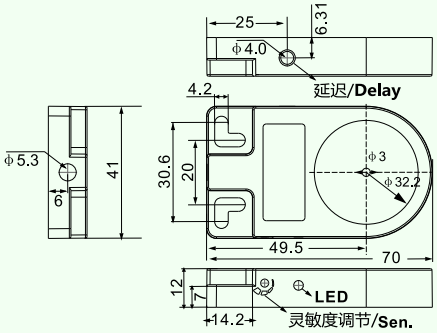

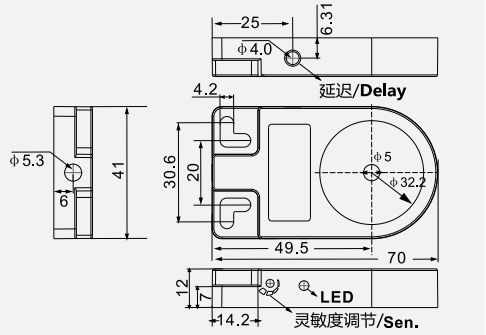

灵敏度的调整

根据操作指南的指示，挑选最适合的型号后，强烈建议在最后安装定位后，再做敏锐度的调整，并注意是否有任何的金属物体会影响到它的正常功能。顺时针方向旋转可增加敏锐度。

Sensitivity adjustment

After having followed the instructions regarding the choice of the most suitable unit it is recommended that the sensitivity adjustment be carried out when the sensor is installed in the final position taking into account how much metal mass is close by which could alter its functioning. The sensitivity increases turning the trimmer clockwise.

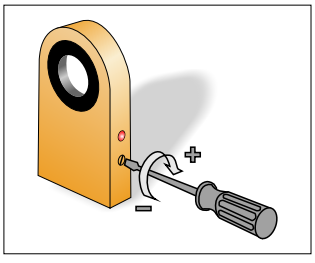

输出延迟

所有我们的环形接近感应器（NPN和PNP放大型式）都备有ON-OFF开关，以控制输出供给的延迟100ms，这个延迟提供感应器能够检测出金属小物块快速的通过感应区域。

Delay on de-energization

All our inductive ring sensors, NPN and PNP amplified versions, are supplied withan ON-OFF switch to activate and disactivate delay on de-energization 100ms. This delay allows the sensor to detect small metallic objects passing rapidly through the sensitivity area of the ring.

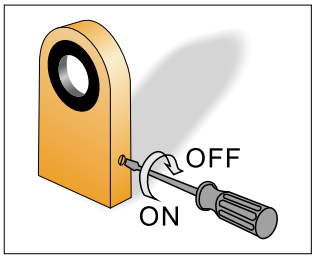

图 片
PICTURE

	Φ6.5	Φ8.0
		
直流-4线/DC-4 wires NPN N.O.+N.C.	IPSCR-N6.5NC-D4Y2	IPSCR-N08NC-D4Y2
直流-4线/DC-4 wires PNP N.O.+N.C.	IPSCR-N6.5PC-D4Y2	IPSCR-N08PC-D4Y2
检测孔直径/Sensing hole diameter	6.5mm	8mm
最小检测物/Min. detecting object	φ1x1.2mm min.	φ2x1.2mm min.
工作电压/Supply voltage	DC12...24V (10...30V DC) 允许波动10%以下/ripple(p-p):10% max.	
高速延时输出/High speed delay output	输出延时100ms/ The output delay 100 ms	
消耗电流/Consumption	<10mA	
负载电流/Load current	<150mA at DC:24V	
电压降/Voltage drop(V_p)	<3V (负载电流/Load current: 150mA)	
LED 显示/Display	红色/Red LED	
保护/Protection Circuit	短路保护、反极性保护、过载保护/Short circuit protection, reversed polarity protection and overload protection	
工作温度/Operating temperature	-25...+70°C (未结露状态) / -25...+70°C(no condensation)	
抗冲击/Anti-impact	500m/s²(50G) X、Y、Z 方向各10次/500m/s²(50G) X、Y、Z direction, each 10 times	
抗震动/Anti-vibration	10...55Hz (振幅1.5mm) X、Y、Z 方向各2小时/10...55Hz(amplitude 1.5mm)X、Y、Z direction each 2 hours	
防护等级/Protection	IP65	
连接方式/Connection	电缆线2M，外径φ4mm/Cable: φ4mm 2M	
外壳材料/Housing material	PBT	

尺寸图
Dimensional drawing

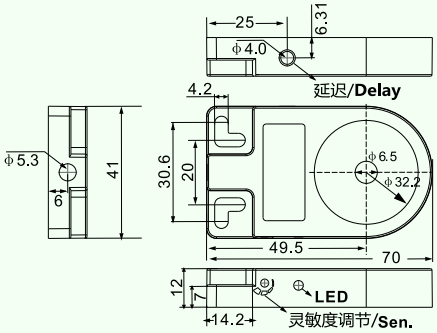

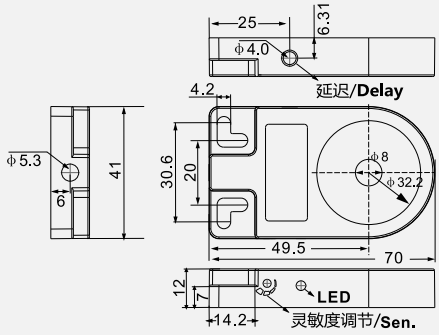

灵敏度的调整

根据操作指南的指示，挑选最适合的型号后，强烈建议在最后安装定位后，再做敏锐度的调整，并注意是否有任何的金属物体会影响到它的正常功能。顺时针方向旋转可增加敏锐度。

Sensitivity adjustment

After having followed the instructions regarding the choice of the most suitable unit it is recommended that the sensitivity adjustment be carried out when the sensor is installed in the final position taking into account how much metal mass is close by which could alter its functioning. The sensitivity increases turning the trimmer clockwise.

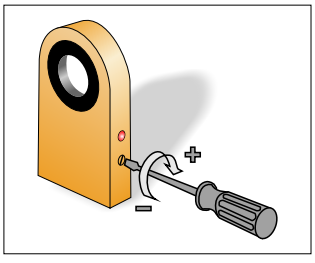

输出延迟

所有我们的环形接近感应器（NPN和PNP放大型式）都备有ON-OFF开关，以控制输出供给的延迟100ms，这个延迟提供感应器能够检测出金属小物块快速的通过感应区域。

Delay on de-energization

All our inductive ring sensors, NPN and PNP amplified versions, are supplied withan ON-OFF switch to activate and disactivate delay on de-energization 100ms. This delay allows the sensor to detect small metallic objects passing rapidly through the sensitivity area of the ring.

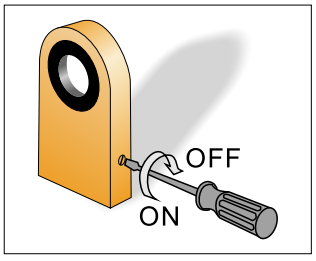

图片 PICTURE	Φ10	Φ12
		
直流-4线/DC-4 wires NPN N.O.+N.C.	IPSCR-N10NC-D4Y2	IPSCR-N12NC-D4Y2
直流-4线/DC-4 wires PNP N.O.+N.C.	IPSCR-N10PC-D4Y2	IPSCR-N12PC-D4Y2
检测孔直径/Sensing hole diameter	10mm	12mm
最小检测物/Min. detecting object	φ2x1.5mm min.	φ2x1.5mm min.
工作电压/Supply voltage	DC12...24V (10...30V DC) 允许波动10%以下/ripple(p-p):10% max.	
高速延时输出/High speed delay output	输出延时100ms/ The output delay 100 ms	
消耗电流/Consumption	<10mA	
负载电流/Load current	<150mA at DC:24V	
电压降/Voltage drop(V_p)	<3V (负载电流/Load current: 150mA)	
LED 显示/Display	红色/Red LED	
保护/Protection Circuit	短路保护、反极性保护、过载保护/Short circuit protection, reversed polarity protection and overload protection	
工作温度/Operating temperature	-25...+70°C (未结露状态) / -25...+70°C(no condensation)	
抗冲击/Anti-impact	500m/s²(50G) X、Y、Z 方向各10次/500m/s²(50G) X、Y、Z direction, each 10 times	
抗震动/Anti-vibration	10...55Hz (振幅1.5mm) X、Y、Z 方向各2小时/10...55Hz(amplitude 1.5mm)X、Y、Z direction each 2 hours	
防护等级/Protection	IP65	
连接方式/Connection	电缆线2M，外径φ4mm/Cable: φ4mm 2M	
外壳材料/Housing material	PBT	

尺寸图
Dimensional drawing

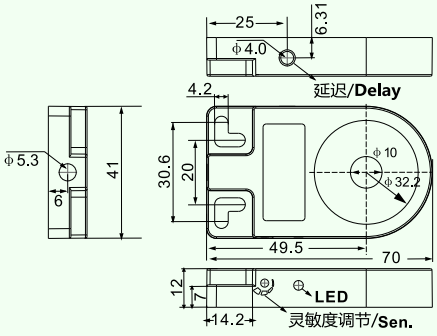

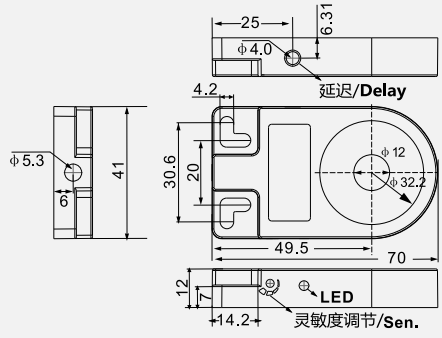

灵敏度的调整

根据操作指南的指示，挑选最适合的型号后，强烈建议在最后安装定位后，再做敏锐度的调整，并注意是否有任何的金属物体会影响到它的正常功能。顺时针方向旋转可增加敏锐度。

Sensitivity adjustment

After having followed the instructions regarding the choice of the most suitable unit it is recommended that the sensitivity adjustment be carried out when the sensor is installed in the final position taking into account how much metal mass is close by which could alter its functioning. The sensitivity increases turning the trimmer clockwise.

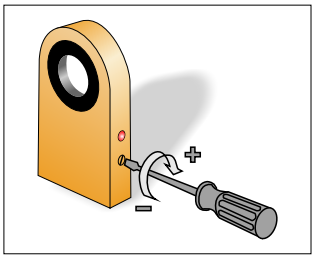

输出延迟

所有我们的环形接近感应器（NPN和PNP放大型式）都备有ON-OFF开关，以控制输出供给的延迟100ms，这个延迟提供感应器能够检测出金属小物块快速的通过感应区域。

Delay on de-energization

All our inductive ring sensors, NPN and PNP amplified versions, are supplied withan ON-OFF switch to activate and disactivate delay on de-energization 100ms. This delay allows the sensor to detect small metallic objects passing rapidly through the sensitivity area of the ring.

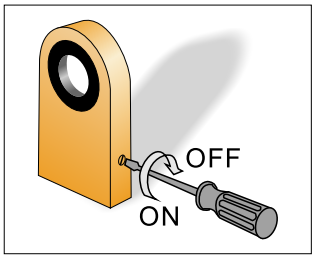

图 片

PICTURE





直流-4线/DC-4 wires NPN N.O.+N.C.	IPSCR-N15.5NC-D4Y2	IPSCR-N16NC-D4Y2
直流-4线/DC-4 wires PNP N.O.+N.C.	IPSCR-N15.5PC-D4Y2	IPSCR-N16PC-D4Y2
检测孔直径/Sensing hole diameter	15.5mm	16mm
最小检测物/Min. detecting object	φ2x1.8mm min.	φ2x1.8mm min.
工作电压/Supply voltage	DC12...24V (10...30V DC) 允许波动10%以下/ripple(p-p):10% max.	
高速延时输出/High speed delay output	输出延时100ms/ The output delay 100 ms	
消耗电流/Consumption	<10mA	
负载电流/Load current	<150mA at DC:24V	
电压降/Voltage drop(V_p)	<3V (负载电流/Load current: 150mA)	
LED 显示/Display	红色/Red LED	
保护/Protection Circuit	短路保护、反极性保护、过载保护/Short circuit protection, reversed polarity protection and overload protection	
工作温度/Operating temperature	-25...+70°C (未结露状态) / -25...+70°C(no condensation)	
抗冲击/Anti-impact	500m/s²(50G) X、Y、Z、方向各10次/500m/s²(50G) X、Y、Z direction, each 10 times	
抗震动/Anti-vibration	10...55Hz (振幅1.5mm) X、Y、Z、方向各2小时/10...55Hz(amplitude 1.5mm)X、Y、Z direction each 2 hours	
防护等级/Protection	IP65	
连接方式/Connection	电缆线2M，外径φ4mm/Cable: φ4mm 2M	
外壳材料/Housing material	PBT	

尺寸图

Dimensional drawing

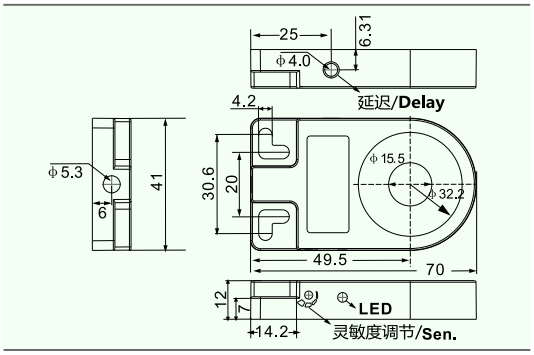

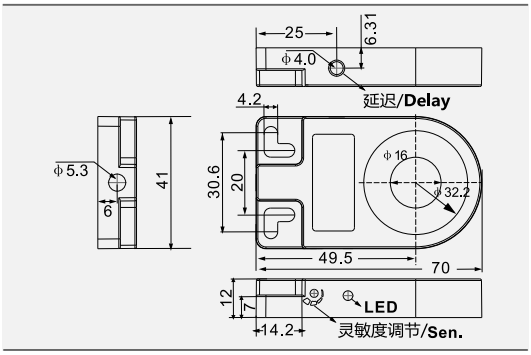

灵敏度的调整

根据操作指南的指示，挑选最适合的型号后，强烈建议在最后安装定位后，再做敏锐度的调整，并注意是否有任何的金属物体会影响到它的正常功能。顺时针方向旋转可增加敏锐度。

Sensitivity adjustment

After having followed the instructions regarding the choice of the most suitable unit it is recommended that the sensitivity adjustment be carried out when the sensor is installed in the final position taking into account how much metal mass is close by which could alter its functioning. The sensitivity increases turning the trimmer clockwise.

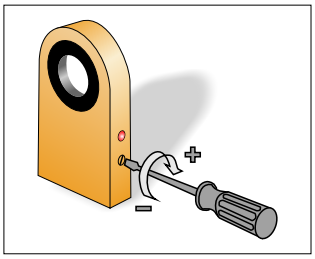

输出延迟

所有我们的环形接近感应器（NPN和PNP放大型式）都备有ON-OFF开关，以控制输出供给的延迟100ms，这个延迟提供感应器能够检测出金属小物块快速的通过感应区域。

Delay on de-energization

All our inductive ring sensors, NPN and PNP amplified versions, are supplied withan ON-OFF switch to activate and disactivate delay on de-energization 100ms. This delay allows the sensor to detect small metallic objects passing rapidly through the sensitivity area of the ring.

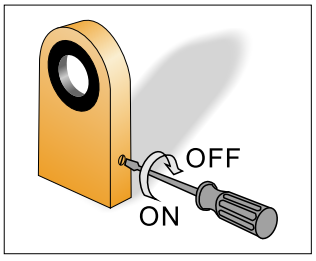

图 片
PICTURE

		
直流-4线/DC-4 wires NPN N.O.+N.C.	IPSCR-N20NC-D4Y2	IPSCR-N22NC-D4Y2
直流-4线/DC-4 wires PNP N.O.+N.C.	IPSCR-N20PC-D4Y2	IPSCR-N22PC-D4Y2
检测孔直径/Sensing hole diameter	20mm	22mm
最小检测物/Min. detecting object	φ3x2.5mm min.	φ3x2.5mm min.
工作电压/Supply voltage	DC12...24V (10...30V DC) 允许波动10%以下/ripple(p-p):10% max.	
高速延时输出/High speed delay output	输出延时100ms/ The output delay 100 ms	
消耗电流/Consumption	<10mA	
负载电流/Load current	<150mA at DC:24V	
电压降/Voltage drop(V_p)	<3V (负载电流/Load current: 150mA)	
LED 显示/Display	红色/Red LED	
保护/Protection Circuit	短路保护、反极性保护、过载保护/Short circuit protection, reversed polarity protection and overload protection	
工作温度/Operating temperature	-25...+70°C (未结露状态) / -25...+70°C(no condensation)	
抗冲击/Anti-impact	500m/s²(50G) X、Y、Z 方向各10次/500m/s²(50G) X、Y、Z direction, each 10 times	
抗震动/Anti-vibration	10...55Hz (振幅1.5mm) X、Y、Z 方向各2小时/10...55Hz(amplitude 1.5mm)X、Y、Z direction each 2 hours	
防护等级/Protection	IP65	
连接方式/Connection	电缆线2M，外径φ4mm/Cable: φ4mm 2M	
外壳材料/Housing material	PBT	

尺寸图
Dimensional drawing

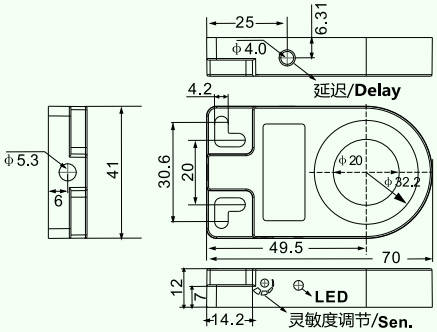

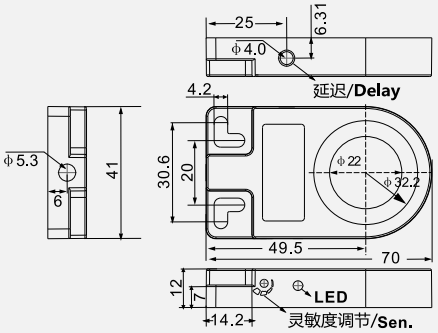

灵敏度的调整

根据操作指南的指示，挑选最适合的型号后，强烈建议在最后安装定位后，再做敏锐度的调整，并注意是否有任何的金属物体会影响到它的正常功能。顺时针方向旋转可增加敏锐度。

Sensitivity adjustment

After having followed the instructions regarding the choice of the most suitable unit it is recommended that the sensitivity adjustment be carried out when the sensor is installed in the final position taking into account how much metal mass is close by which could alter its functioning. The sensitivity increases turning the trimmer clockwise.

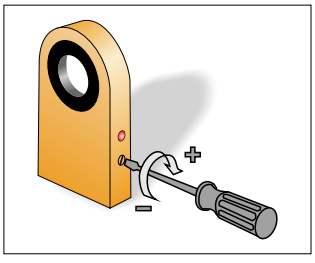

输出延迟

所有我们的环形接近感应器（NPN和PNP放大型式）都备有ON-OFF开关，以控制输出供给的延迟100ms，这个延迟提供感应器能够检测出金属小物块快速的通过感应区域。

Delay on de-energization

All our inductive ring sensors, NPN and PNP amplified versions, are supplied withan ON-OFF switch to activate and disactivate delay on de-energization 100ms. This delay allows the sensor to detect small metallic objects passing rapidly through the sensitivity area of the ring.

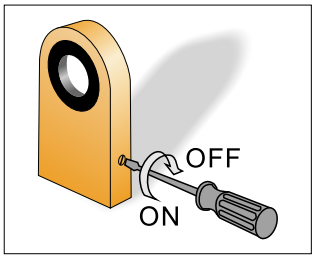

图 片
PICTURE



直流-4线/DC-4 wires NPN N.O.+N.C.	IPSCR-N25NC-D4Y2
直流-4线/DC-4 wires PNP N.O.+N.C.	IPSCR-N25PC-D4Y2
检测孔直径/Sensing hole diameter	25mm
最小检测物/Min. detecting object	φ3x3.0mm min.
工作电压/Supply voltage	DC12...24V (10...30V DC) 允许波动10%以下/ripple(p-p):10% max.
高速延时输出/High speed delay output	输出延时100ms/ The output delay 100 ms
消耗电流/Consumption	<10mA
负载电流/Load current	<150mA at DC:24V
电压降/Voltage drop(V_p)	<3V (负载电流/Load current: 150mA)
LED 显示/Display	红色/Red LED
保护/Protection Circuit	短路保护、反极性保护、过载保护/Short circuit protection, reversed polarity protection and overload protection
工作温度/Operating temperature	-25...+70°C (未结露状态) / -25...+70°C(no condensation)
抗冲击/Anti-impact	500m/s²(50G) X、Y、Z 方向各10次/500m/s²(50G) X、Y、Z direction, each 10 times
抗震动/Anti-vibration	10...55Hz (振幅1.5mm) X、Y、Z 方向各2小时/10...55Hz(amplitude 1.5mm)X、Y、Z direction each 2 hours
防护等级/Protection	IP65
连接方式/Connection	电缆线2M，外径φ4mm/Cable: φ4mm 2M
外壳材料/Housing material	PBT

尺寸图
Dimensional drawing

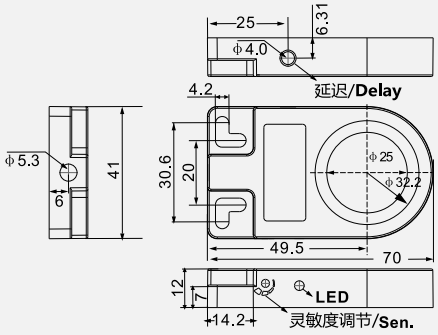

灵敏度的调整

根据操作指南的指示，挑选最适合的型号后，强烈建议在最后安装定位后，再做敏锐度的调整，并注意是否有任何的金属物体会影响到它的正常功能。顺时针方向旋转可增加敏锐度。

Sensitivity adjustment

After having followed the instructions regarding the choice of the most suitable unit it is recommended that the sensitivity adjustment be carried out when the sensor is installed in the final position taking into account how much metal mass is close by which could alter its functioning. The sensitivity increases turning the trimmer clockwise.

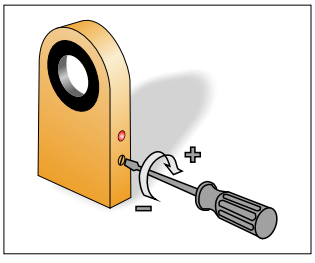

输出延迟

所有我们的环形接近感应器（NPN和PNP放大型式）都备有ON-OFF开关，以控制输出供给的延迟100ms，这个延迟提供感应器能够检测出金属小物块快速的通过感应区域。

Delay on de-energization

All our inductive ring sensors, NPN and PNP amplified versions, are supplied withan ON-OFF switch to activate and disactivate delay on de-energization 100ms. This delay allows the sensor to detect small metallic objects passing rapidly through the sensitivity area of the ring.

