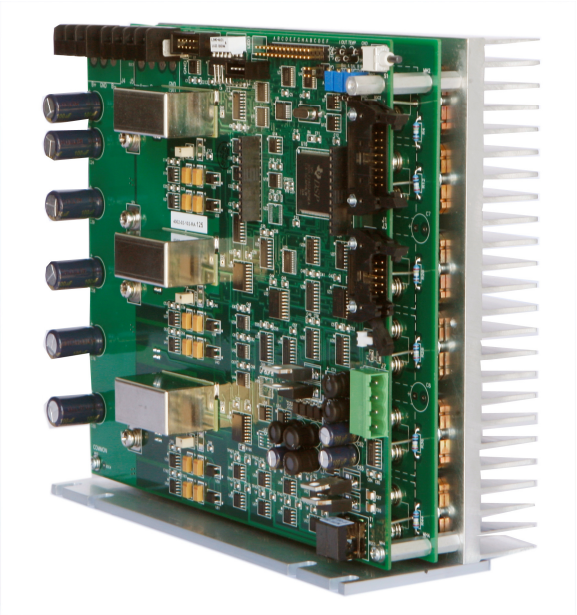

LA Series Linear Servo Amplifier

LA-800 Series
LA-1500 Series

Technical Reference Manual

Manual Revision: D

3870 Del Amo Blvd. Suite 503, Torrance CA, 90503

www.varedan.net

VAREDAN中国：北京慧摩森电子系统技术有限公司
地址：北京市朝阳区幺家店路甲1号玲珑文创园106
电话：010-62311872
传真：010-62316782
邮箱：sales@bjsm.com.cn

Original Manual Revision December 5, 2011
Copyright ©2011 Varedan Technologies

Corporate Office:
Varedan Technologies
3870 Del Amo Blvd., Suite 503
Torrance, CA 90503

Phone: 310-542-2320
Fax: 310-542-2344

Eastern Region Sales & Support
Phone: 860-295-0048

www.varedan.com

This document contains proprietary and confidential information of Varedan Technologies, LLC and is protected under Federal copyright law.

The information in this document is subject to change without notice. No part of this document may be reproduced or transmitted in any form without the express written consent of Varedan Technologies, LLC.

Document Change History

Revision	Description
A	Original for new board design from LA manual rev G.
B	Add part numbers for LA1500 and VMC-3000
C	Transconductance table for different models, Revise mechanical dimensions
D	Correct ABSI time in jumper description.

CAUTION! READ THIS SECTION BEFORE PROCEEDING.

- Warning! Potentially lethal voltages exist within the amplifier when power is applied. Never attempt to handle or probe the amplifier with power applied.
- This product contains static sensitive devices and requires proper handling with ESD protection.
- These amplifiers are capable of producing large amounts of energy. Serious injury or death can result from improper motor or load movement. The amplifier requires an external controller for Sinusoidal mode operation to commutate the motor properly. In Trapezoidal mode operation, the amplifier requires properly phased Hall sensors for commutation. Verify proper Hall sensor phasing and motor direction before connecting any load to a motor.
- Do not connect the motor to the system load during initial testing and installation.
- These amplifiers require customer supplied airflow for proper operation. Operation of the amplifier without proper cooling will void the warranty. Contact the factory for information on adequate airflow for your application.
- Be sure power is off when inserting or removing connectors or connections.
- For motors with a phase to phase inductance of less than 250uH, please consult the factory. A special set of current loop bandwidth components will need to be installed for safe operation of the amplifier.

Contents

1 INTRODUCTION 7
1.1 SAFE OPERATING AREA 7
2 SPECIFICATIONS 8
3 MODEL NUMBERING 9
4 PROTECTIVE FEATURES 10
5 OPERATIONAL DESCRIPTION 11
6 JUMPER SETTINGS 11
6.1 LA-800 SERIES JUMPER SETTINGS 12
6.2 LA-1500 SERIES JUMPER SETTINGS 13
6.3 JUMPER DESCRIPTIONS 14
7 CONNECTOR CONFIGURATIONS 15
7.1 J1 SIGNAL CONNECTOR 15
7.2 J2 BIAS POWER CONNECTOR 15
7.3 J3 MOTOR FEEDBACK CONNECTOR 15
7.4 J4 BUS POWER CONNECTOR 16
7.5 J5 MOTOR CONNECTOR 16
7.6 J6 INTERFACE P-BOARD CONNECTOR 16
7.7 J7 INTERFACE P-BOARD CONNECTOR 16
7.8 J8 STATUS OUTPUT CONNECTOR 17
7.9 J9 MOTOR TEMPERATURE SWITCH CONNECTOR 17
7.10 J10 SERIAL COMMUNICATION CONNECTOR 17
7.11 CONNECTOR PART NUMBERS 18
8 USER INTERFACES 19
8.1 PUSH BUTTON 19
8.2 LED DISPLAY 19
8.3 SOFTWARE VERSION DISPLAY 19

8.4 L.E.D. ERROR CODES AND MEANING 20
8.5 STATUS INDICATOR/REMOTE DISPLAY PORT 22
8.6 SERIAL PORT 22
8.6.1 SERIAL COMMANDS 23
8.6.2 SERIAL PARAMETER SETTINGS 25
8.6.2.1 SOFTWARE PARAMETER SETTING TABLE SUMMARY 26
9 BALANCING 27
9.1 AUTOBALANCE 27
9.2 MANUAL BALANCE 28
10 TEST POINTS 29
APPENDIX A. SERIAL COMMUNICATION MESSAGES 37
10.1 SIGN ON MESSAGE 38
10.2 ALARM MESSAGES 38
10.3 AUTOBALANCE MESSAGES 38
10.4 ENABLE STATUS MESSAGES 39
10.5 FACTORY DEFAULT MESSAGE 39
10.6 HELP MESSAGES 39
10.7 LIST MESSAGES 40
10.8 MODE COMMAND MESSAGES 40
10.9 SAVE PARAMETERS MESSAGE 40
10.10 FAULT HISTORY MESSAGES 41
10.11 CLEAR FAULT HISTORY MESSAGE 41
10.12 SOA FAULT HISTORY MESSAGES 42

List of Figures

Figure 1. Jumper Locations 12
Figure 2. Jumper Locations 13
Figure 3 – Location of Jumpers, Balance Potentiometers and Test Points 30
Figure 4. Functional Block Diagram – All Models 31
Figure 5. Installation Drawing Details 32
Figure 6. Typical Connections Single-Phase Models with “S” suffix 33
Figure 7. Typical Connections Three-Phase Models with “T” suffix 33
Figure 7. Typical Connections Three-Phase Models with “T” suffix 34
Figure 8. LA-800 Series Mechanical Dimensions 35
Figure 9. LA-1500 Series Mechanical Dimensions 36

1 Introduction

The LA series of Linear Amplifiers are the perfect choice for systems requiring low radiated noise and zero distortion from the drive electronics. These high power current mode linear amplifiers are well suited to drive low inductance/resistance loads such as brushless and brush servo motors or voice coils. Commutation options include externally commutated 2-phase sine input, trapezoidal commutation using motor mounted hall sensors, or single-phase control.

With their true class AB linear output stage, their design features pure analog control from input to output. The on-board DSP only provides monitoring functions and does not get involved in the current control of the output stage.

The LA amplifiers are both extremely quiet and provide the ultimate in zero cross-over distortion for smooth output positioning. The design of these amplifiers includes an on board high speed DSP which monitors all key system functions in real time and provides protection for the outputs by only allowing output power within the “Safe Operating Area” of the output transistors. An intelligent user interface allows setup and storage of all system parameters via the serial interface. Non-volatile memory provides storage of the parameters during power off conditions.

1.1 Safe Operating Area

The LA amplifiers include a sophisticated algorithm that protects the outputs from over power conditions. This algorithm is matched to the power characteristics of the output transistors in each amplifier model. With linear servo amplifiers (as opposed to PWM amplifiers), it is very important to provide over-power protection (rather than simple over-current protection) due to the linear nature of the output control. In the case of PWM amplifiers, only over-current protection is required since the outputs are operating in saturation mode or “full on mode”. This mode provides very little voltage drop across the output transistors, so simple current monitoring is sufficient to provide protection of the outputs.

With linear servo amplifiers, the outputs are operating in their linear region, so the voltage across the output transistors can be a substantial contribution to the total power dissipated by the device. To properly protect the amplifier from damage, the amplifier must provide protection by monitoring the power (voltage * current) in the output devices. To put this in perspective, the outputs used in our LA-415 (5A continuous, 15A peak) can handle 60A under the proper conditions! It’s the power that has to be kept under control.

The DSP in the LA series amplifiers monitors the power of each output device in real time as the device is switched on by the control circuitry. This instantaneous power measurement is compared with the transistor manufactures recommended “safe operating area” curve (published in all transistor specifications) stored in the DSP memory. The amplifier is shut down in the event the measured power exceeds the recommended ratings of the output devices.

Our Safe Operating Area (SOA) algorithm has proven to be very effective in protecting the amplifier from damage due to over power conditions. While the user may experience “nuisance” tripping of the SOA protective function during system development and testing, be aware that the conditions that caused the “nuisance” trip may have very well have destroyed an amplifier without this SOA protection.

2 Specifications

2.1 LA-800 Series

	LA-830	LA-835	LA-840
Peak Output Current	30A	35A	40A
Continuous Output Current	15A	18A	20A
Peak Output Power (25°C)	3000W	4500W	6000W
Continuous Power Dissipation (25°C)	800W	800W	800W
Size - Length x Width x Height	8.00 in. x 8.16 in. x 4.8		
Motor Bus Voltage – Bipolar	+/-12 to +/-150VDC		
Bias Supply Voltage - Bipolar	+/-14.5 to +/-16.0V (@300mA each)		
Max. Heat Sink Temperature	70°C		
Current Loop Bandwidth*	up to 10kHz		
Operating Modes	2-Phase Sine, Trapezoidal, Single-Phase		
Absolute Overcurrent Trip Time	50ms		
Hall Sensor Supply (+5 Ext.)	+5V @ 100mA max.		
Command Signal (A and B inputs)	+/-10V Single-Ended, +/-20V Differential		

2.2 LA-1500 Series

	LA-1535	LA-1545	LA-1555
Peak Output Current	35A	45A	55A
Continuous Output Current	20A	25A	30A
Peak Output Power (25°C)	3000W	4500W	6000W
Continuous Power Dissipation (25°C)	1500W	1500W	1500W
Size - Length x Width	8.00 in. x 8.16 in. x 5.75		
Motor Bus Voltage – Bipolar	+/-12 to +/-150VDC		
Bias Supply Voltage - Bipolar	+/-14.5 to +/-16.0V (@300mA each)		
Max. Heat Sink Temperature	70°C		
Current Loop Bandwidth*	up to 10kHz		
Operating Modes	2-Phase Sine, Trapezoidal, Single-Phase		
Absolute Overcurrent Trip Time	50ms		
Hall Sensor Supply (+5 Ext.)	+5V @ 100mA max.		
Command Signal (A and B inputs)	+/-10V Single-Ended, +/-20V Differential		

*This setting can be customized. Please contact the factory for details.

3 Model Numbering

3.1 Amplifier Module

The LA Series Linear Amplifier modules are available in various power options and in either single-phase or 3-phase models.

800 Series
Model Number Breakdown: LA-830-T

Linear Amplifier
Power Level (see table)
S=Single Phase, T= 3 phase

1500 Series
Model Number Breakdown: LA-1530-T

Linear Amplifier
Power Level (see table)
S=Single Phase, T= 3 phase

3.2 Motion Controller Module

The LA series is designed to accept our VMC-3000 plug-in motion controller module that transforms the amplifier into a complete single-axis motion controller. For brushless 3-phase motors, this module provides commutation from a motor-mounted encoder and can perform position, velocity or torque mode control. For brush motors, this module provides position and velocity modes using a motor-mounted encoder for position information. Please refer to the VMC-3000 Technical Reference Manual for more information.

The VMC-3000 option adds a “1” to the part number as shown below:

800 Series Motion Controller
Model Number Breakdown: LA-8130-T

Linear Amplifier
VMC-3000 motion controller
Power Level (see table)
S=Single Phase, T= 3 phase

1500 Series Motion Controller
Model Number Breakdown: LA-15130-T

Linear Amplifier
VMC-3000 motion controller
Power Level (see table)
S=Single Phase, T= 3 phase

4 Protective Features

DSP Fault – Set when the internal DSP checksum fails following reset

NVM Fault – Set when NVM checksum fails following reset. Parameter defaults set.

External +5V – Set when on board +5V supply for Halls is out of range

Autobalance Fault – Set when autobalance can't balance amplifier outputs

ABS Overcurrent – Set when instantaneous overcurrent condition is detected

SOA – Set when Safe Operating Area protection detects an over power condition

5 VDC Reference error – Set when internal +5 reference supply is out of range

Bus Over Voltage – Set when Bus voltage is greater than maximum allowed (75 Vdc)

Hall Error – Set when hall sequence is invalid (0 or 7 value is read on hall inputs)

Fatal Error – Set if the DSP encounters an unidentified problem.

Amplifier Over Temp – Set when amplifier heat sink temperature exceeds 70 C.

Motor Over Temp – Set when motor temperature input is open

Overcurrent – Set when amplifier detects an overcurrent condition

Bus Under Voltage – Set when Bus voltage is less than the minimum allowed (10 Vdc)

Bias error – Set when Bias voltage input +/-15 is outside allowable range

2.5V Reference error – Set when internal 2.5V supply is out of range.

5 Operational Description

Before applying power to the amplifier be sure to read all sections in this document.

Upon power up of the +/- 15V bias supply, the amplifier derives all the necessary internal voltages for operation related to the logic and output drivers. Once the proper levels are achieved, the DSP is released from reset and begins operation. A series of internal checks are done to insure the DSP is operating correctly. The I/O is initialized for operation if these checks pass. The NVM is then read and the stored checksum is verified. If the system is setup to use jumpers, the jumpers are read; otherwise the parameter information from NVM is used. The analog balance network is set to the stored balance values. The version and revision number for the software is flashed on the display and the serial sign on message is sent.

The state of the Enable input is read to determine whether the hardware enable input or the software serial enable command should be used to enable the drive. If the hardware Enable input is open (high) the system allows software to control the Enable operation via the E command. If at anytime during operation the Enable input goes low, the software mode is cancelled and the hardware Enable input is used for control. The initialization process is now complete and the software enters main loop processing.

During main loop processing, the software runs in an endless loop performing the tasks necessary for drive operation. Once per pass in the main loop, the 7-segment LED and status port are updated, the inputs are scanned and the protective algorithm calculations are performed. In addition to the main loop processing, interrupts are enabled to handle such actions as Limit input processing for Hall mode, A/D processing for all system voltages and currents, and serial communication if used.

If at anytime during operation a fault occurs, the drive will immediately disable the motor windings, set the Fault output active and display the fault code on the LED display. A message will also be sent over the serial interface annunciating the fault. The “A” command can also be used to obtain fault information.

Note that bias power (+/-15V) is always required for the drive to operate. Bus power is only required if a motor is to be used. This allows the drive to be set up away from the actual system using only the bias supply.

6 Jumper Settings

The next few pages define the jumper settings for each model amplifier. The settings for the over current trip levels are different for each model, depending on the number of outputs and the heatsink configuration. All other settings are identical for each model.

Jumper settings are only updated following a reset or POR of the drive.

If no jumpers are installed on JP1, JP2 and JP3, the parameters will be set via software.

Note 1: If using jumpers in Sine Mode with minimum settings (no jumpers), install a jumper on JP1-G to force the drive to use the jumper settings. This prevents the drive from using software settings as described in Note 2.

Note 2: JP1H and JP2-A are not used in single-phase mode models.

6.1 LA-800 Series Jumper Settings

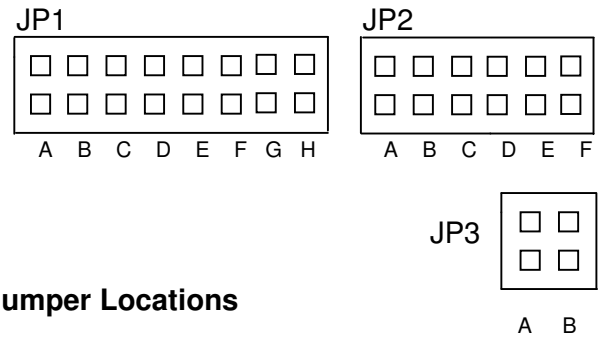

Figure 1. Jumper Locations

JP1

Continuous Overcurrent Trip Level Amps (model specific)

LA-830	LA-835	LA-840	JP1-A	JP1-B
5	5	5	Open	Open
8	10	10	In	Open
12	15	15	Open	In
15	18	20	In	In

Overcurrent Trip Time

Trip Time	JP1-C	JP1-D
1.25 Sec	Open	Open
2.5 Sec	In	Open
5 Sec	Open	In
10 Sec	In	In

Absolute Overcurrent Trip Level Amps (model specific)

LA-830	LA-835	LA-840	JP1-E	JP1-F
10	20	25	Open	Open
15	25	30	In	Open
25	30	35	Open	In
30	35	40	In	In

JP1-G, Normally Not Used. **See Note 1**

Motor Reverse Selection (Hall Mode)

Mode	JP1-H
Normal	Open
Reverse	In

JP2

Sine/Hall Mode Selection*

Mode	JP2-A
Sine Mode	Open
Hall Mode	In

***See Notes 1&2**

Input Filter Setting

Filter	JP2-B	JP2-C
500 Hz	Open	Open
800 Hz	In	Open
15 kHz	Open	In
32 kHz	In	In

Transconductance Ratio Setting (Amps/Volt)

LA-830	LA-835	LA-840	JP2-D	JP2-E
2.0	2.0	2.0	Open	Open
3.0	3.0	3.0	In	Open
4.0	4.0	4.0	Open	In
5.0	5.0	5.0	In	In

Input DAC Selection

DAC Input	JP2-F
Differential (Bipolar)	Open
Single Ended (Unipolar)	In

JP3

Current Loop Bandwidth Setting

Bandwidth	JP3-A	JP3-B
Contact	Open	Open
Factory	In	Open
For	Open	In
Settings	In	In

6.2 LA-1500 Series Jumper Settings

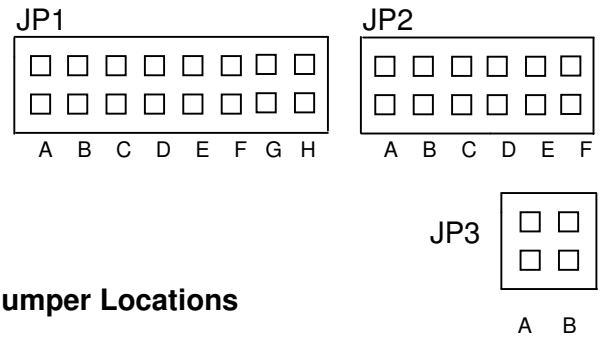

Figure 2. Jumper Locations

JP1

Continuous Overcurrent Trip Level Amps (model specific)

LA-1535	LA-1545	LA-1555	JP1-A	JP1-B
5	10	15	Open	Open
10	15	25	In	Open
15	20	25	Open	In
20	25	30	In	In

Overcurrent Trip Time

Trip Time	JP1-C	JP1-D
1.25 Sec	Open	Open
2.5 Sec	In	Open
5 Sec	Open	In
10 Sec	In	In

Absolute Overcurrent Trip Level Amps (model specific)

LA-1535	LA-1545	LA-1555	JP1-D	JP1-E
10	15	25	Open	Open
15	25	35	In	Open
25	35	45	Open	In
35	45	55	In	In

JP1-G, Normally Not Used. **See Note 1**

Motor Reverse Selection (Hall Mode)

Mode	JP1-H
Normal	Open
Reverse	In

JP2

Sine/Hall Mode Selection*

Mode	JP2-A
Sine Mode	Open
Hall Mode	In

***See Notes 1&2**

Input Filter Setting

Filter	JP2-B	JP2-C
500 Hz	Open	Open
800 Hz	In	Open
15 kHz	Open	In
32 kHz	In	In

Transconductance Ratio Setting (Amps/Volt)

LA-1535	LA-1545	LA-1555	JP2-D	JP2-E
2.0	2.0	2.0	Open	Open
3.0	3.0	3.0	In	Open
4.0	4.0	4.0	Open	In
5.0	5.0	5.0	In	In

Input DAC Selection

DAC Input	JP2-F
Differential (Bipolar)	Open
Single Ended (Unipolar)	In

JP3

Current Loop Bandwidth Setting

Bandwidth	JP3-A	JP3-B
Contact	Open	Open
Factory	In	Open
For	Open	In
Settings	In	In

6.3 Jumper Descriptions

JP1-A, B – Continuous Overcurrent Level – This setting determines the continuous level of current allowed by the amplifier. Any phase current value above this setting causes an internal timer to run. If the timer reaches the set value for Overcurrent Trip Time, the drive disables and the "L" error is displayed. The decimal point on the LED display is lit when any phase current is above the Overcurrent setting. The Overcurrent Timer accumulates time for any value of phase current that exceeds the Overcurrent threshold value. The Overcurrent Timer is decremented for any phase current value less than the Overcurrent threshold value. The decay rate of the timer is 2x the attack rate. This means that if the timer has accumulated for 2 seconds, it takes 1 second for the timer to return back to 0.

JP1-C, D – Continuous Overcurrent Trip Time – This setting establishes the time that any phase current is allowed to be above the Overcurrent setting. When the Overcurrent time is exceeded, the drive disables and the Overcurrent error is reported ("L" on the display). The timer decays at a rate of 2x the attack rate.

JP1-E, F – Absolute Overcurrent – This setting establishes the maximum allowable current. If the current exceeds the set value, the drive disables and the error is reported ("5"on the display). The amplifier is designed to trip within 50mS of detecting the event.

JP1- G – Not used. Install this jumper if the desired amplifier setup requires no other jumpers. This will prevent the software from using the stored NVM settings.

JP1-H – Motor Reverse – When this jumper is installed, the motor rotation in Hall mode is reversed for a given input signal.

JP2- A – This jumper establishes the mode of operation for commutation, either Sine or Hall. In Sine mode, the user must provide 2 analog input signals 120° out of phase, representing motor currents for Phase A and Phase B. The amplifier internally derives the current for Phase C based on these inputs. In Hall mode, the user provides a current reference command on Phase A input only. External Hall sensors must be connected for motor commutation. The amplifier drives current to two of the three phases depending on the Hall sequence input on the J3 Motor Feedback connector.

JP2- B, C – These jumpers establish the Input Filter setting. The cutoff frequency for low pass filtering of the analog input command signals is set according to the values shown above.

JP2-D, E – Transconductance Ratio – These jumpers determine the amount of output current, in amps, for a given input voltage, in volts, on the reference input(s) Command A and Command B. (Volts to amps ratio).

JP2 – F – Input DAC Selection – This setting establishes the voltage configuration for the Command A and Command B input signal reference. In Single Ended mode, the Command+ inputs accept a +/-10vdc input with respect to ground (common). In Differential mode, the Command +/-inputs accept a +/-20vdc signal terminal-to-terminal, non-grounded.

JP3 – A,B - Current Loop Bandwidth – This setting establishes the current loop bandwidth setting. Use caution when changing from one setting to the next. The user does not normally set these jumpers. **Please contact the factory for details before changing these settings.**

7 Connector Configurations

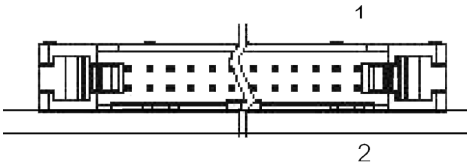

7.1 J1 Signal Connector

Pin	Function
1	DAC Phase A+ Input Used in both Single Ended and Differential modes.
2	DAC Phase A- Input Used only in Differential mode.
3	DAC Phase B+ Input Used in both Single Ended and Differential modes. Not used in Hall Mode.
4	DAC Phase B- Input Used only in Differential mode. Not used in Hall Mode.
5	I Out – Output voltage representing 1V=6.6A Output Current. See note in Test Points section.
6	Common (Ground)
7	Limit+ - Active high input, Internally pulled high (3.3V), set low to enable travel. Not used in Sine Mode.
8	Common (Ground)
9	Limit – - Active high input, Internally pulled high (3.3V), set low to enable travel. Not used in Sine Mode.
10	Common (Ground)
11	Enable – Ground to enable amplifier. Internally pulled high (3.3V). See Operation Description.
12	Common (Ground)
13	Fault – High output indicates fault, low normally (no fault). Internally pulled high (5V)
14	Common (Ground)
15	Reset – Ground input to reset drive. Internally pulled high (3.3V)
16	Common (Ground)

Note: Inputs with 3.3V pull ups are 5V input compatible

7.2 J2 Bias Power Connector

Pin	Function
1	+15 Volts DC in
2	Common (Ground)
3	Common (Ground)
4	–15 Volts DC in

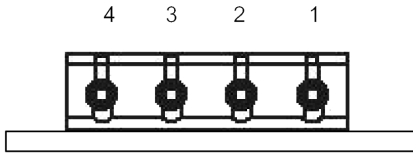

7.3 J3 Motor Feedback Connector

Pin	Function
1	No Connect
2	No Connect
3	Common (Ground)
4	Hall C Input
5	Hall A Input
6	Hall B Input
7	+5 Volts DC Output (100mA max)
8	No Connect
9	Common (Ground)
10	No Connect

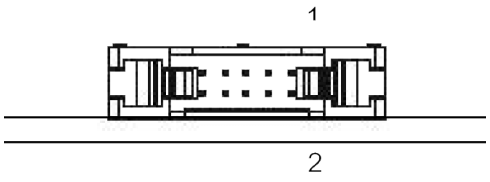

7.4 J4 Bus Power Connector

Pin	Function
1	+Bus Power
2	Bus Common (Ground)
3	–Bus Power

7.5 J5 Motor Connector

Pin	Function
1	Phase A Output
2	Phase B Output. Note: For Single-phase operation, use Phases B and C.
3	Phase C Output
4	Motor Ground (for cable shield and/or FG connection if used) (J5 pin 4 is internally connected to amplifier common or ground)

7.6 J6 Interface P-Board Connector

Pin	Function
1	N/C
2	N/C
3	Common (Ground)
4	Common (Ground)
5	N/C
6	Command A
7	Command B
8	N/C
9	+3.3Vdc
10	Command Select 2
11	Command Select 1
12	Common (Ground)

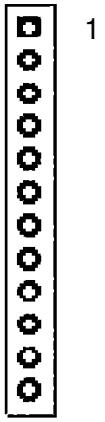

7.7 J7 Interface P-Board Connector

Pin	Function
1	N/C
2	N/C
3	N/C
4	N/C
5	N/C
6	N/C
7	N/C
8	+5Vdc
9	Common (Ground)
10	–15Vdc
11	Common (Ground)
12	+15Vdc

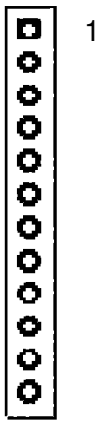

7.8 J8 Status Output Connector

Pin	Function
1	7 Segment display – A
2	7 Segment display – B
3	7 Segment display – C
4	7 Segment display – D
5	7 Segment display – E
6	7 Segment display – F
7	7 Segment display – G
8	7 Segment display – DP
9	+5 Volts DC
10	Common (Ground)

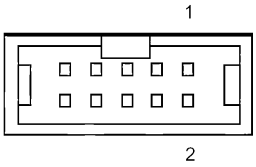

7.9 J9 Motor Temperature Switch Connector

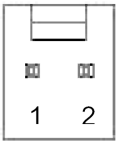

Pin	Function
1	Motor Temperature switch +. Normally Closed to enable amplifier. Internally pulled up to 5vdc. Jumper J9 pins 1-2 if input is not used.
2	Motor Temperature switch common. (Internally connected to Common)

7.10 J10 Serial Communication Connector

Pin	Function
1	Receive (RxD)
2	Transmit (TxD)
3	Common (Ground)
4	Do Not Connect

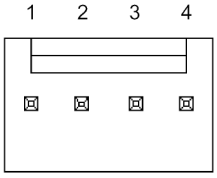

7.11 Connector Part Numbers

Connector	Manufacturer	P/N	Mate P/N	Digi-Key #
J1	3M	3408-1302	3452-7600	MSD16K-ND
J2	Phoenix	17-59-03-3	17-57-035	277-1013-ND
J3	3M	3793-1302	3473-7600	MSD10K-ND
J4	Thomas & Betts	4PCR-03-008	N/A	
J5	Thomas & Betts	4PCR-04-008	N/A	
J6	Molex	90147-1212	Contact Factory	
J7	Molex	90147-1212	Contact Factory	
J8	3M	30310-6002HB	3473-7600	MSD10K-ND
J9	Molex	22-05-3021	*22-01-3027	WM2000-ND
J10	Molex	22-05-3041	22-01-3047	WM2002-ND

*Note: J9 can be shorted with a standard 0.100” jumper if motor temp switch not used.

8 User Interfaces

8.1 Push Button

The push button is used for both the Reset and Autobalance functions. The DSP measures the amount of time the button is active (pressed). If the button is active for less than 1 second, the drive is reset upon release of the button. If the button is active for more than 1 second, the drive enters Autobalance mode. The switch is debounced to prevent multiple entries into the Autobalance routines if the switch is held down for longer than 1 second.

Pushbutton
> 1 Second = Autobalance
< 1 Second = Drive Reset

The push button can also be used during a power-on-reset to display the full part number of the software. To use this feature, hold the push button in while applying bias power. The display will begin flashing the full part number. Release the button before the part number display completes. See the section on Software Version Display below.

8.2 LED Display

The LED Display indicates the status of the drive. Following a reset or POR, the LED will flash all segments as a check to make sure they are working. The software version and revision are shown next. The display will blank briefly (1/2 sec.) and the drive status or a system fault will be indicated. The drive is fully functioning when the status is shown (“C” or “0”). When a fault is shown, the drive is disabled and cannot be enabled until the fault is cleared. For most faults, a reset or AR 1 command is needed to reset the fault. A Bus Undervoltage (U) fault will be automatically cleared when the bus is at the proper operating voltage. A Fatal Error (F) can only be cleared by a power on reset of the amplifier.

8.3 Software Version Display

The software version is shown only following a power-on-reset (not after a pushbutton reset). The version information is presented as follows:

Example: Display shows 2.1.0-4
- “2” = Upper level part number designator
- “1” = Major Software Version
- “0” = Minor Software Version
- “4” = Number of current loop bandwidth settings

The full part number of the software can be displayed during power-on-reset by holding in the push button and applying bias power. The part number will be displayed in the following format:

Example: 4002-12.2.0-2
- “4002”= Varedan Technologies product code
- “12” = Upper level part number designator
  (“10”=LA-400, “11”=LA-525,“12”=LA4-07,13”=LA-200)
- “2” = Major Software Version
- “0” = Minor Software Version
- “2” = Number of current loop bandwidth settings

.

8.4 L.E.D. Error Codes and Meaning

The following table lists the L.E.D. error codes and their meaning. If multiple errors are present, the display will cycle through all the error codes, displaying each for ½ second.


Amp ok, motor current enabled. This is the “normal” display when enabled.

DSP Fault – Set when the internal DSP checksum fails following reset


NVM Fault – Set when NVM checksum fails following reset. Parameter defaults are set.


Hall Supply +5vdc – Set when on board +5v supply for Halls is out of range


Autobalance Fault – Set when autobalance can’t balance amplifier outputs.


ABS Overcurrent – Set when instantaneous overcurrent condition is detected


SOA – Set when Safe Operating Area protection detects an over power condition.


5 VDC Reference error – Set when internal +5 reference supply is out of range


Bus Over Voltage – Set when Bus voltage is greater than +/-75 Vdc. `
(Note: Each leg (+ and -) is checked against this value.)


Amp ok, not enabled (Output is Clamped off). This is the normal display when the amplifier is not enabled.


2.5 Vdc Reference error – Set when internal 2.5vdc supply is out of range.



Hall Error – Set when hall sequence is invalid (hall inputs are all 1's or all 0's)



Fatal Error – Set if the DSP encounters an unidentified problem.



Amplifier Over Temp – Set when the heat sink temperature is above 70 C.



Motor Over Temp – Set when motor temperature input is open



Overcurrent – Set when amplifier detects an overcurrent condition
("L"ow speed circuit breaker)



Bus Under Voltage – Set when the Bus voltage is less than +/-10 Vdc.
(Note: Each leg (+ and -) is checked against this value.)



Bias error – Set when Bias voltage input +/-15 is outside allowable range.
Note: The tolerance of this supply must be within +1.00vdc and –0.50vdc on each side of the input (+14.50 to 16vdc and –14.50 to –16vdc)



(Decimal point on) Indicates an Overcurrent trip pending

Upper bar (segment a) indicates +Limit is active (Only valid in Hall mode).

Lower bar (segment d) indicates –Limit is active (Only valid in Hall mode).

8.5 Status indicator/Remote Display Port

Connector J8 can be used to monitor system status via a parallel bus or remote display. The data written to this port is the same data used to drive the 7-segment display. An “on” segment results in the corresponding J8 pin to be at +5 volts. The bits are defined as follows:

J8 Pin	LED segment
1	a
2	b
3	c
4	d
5	e
6	f
7	g
8	dp
9	+5 vdc External (100mA Maximum)
10	Gnd

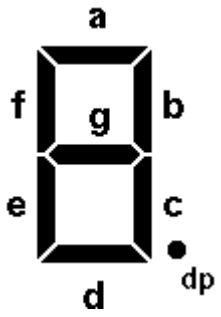

8.6 Serial Port

J10 is the RS232 communication port. A built in operating system in the DSP allows setting and viewing of all parameters and switch settings via a dumb terminal interface such as Windows Hyper Terminal. An on board NVM chip stores the serial parameter settings for recall on next power up of following a reset.

The communication settings are 19.2 Kbaud, 8 data, 1 stop, no parity, no handshake. The pin out for the cable to connect to a standard PC serial port as a DTE device is as follows.

J10 Pin	DB9-F Pin
1	3 Rxd
2	2 Txd
3	5 Common (Ground)
4	No Connect (Ground only for programming cable)

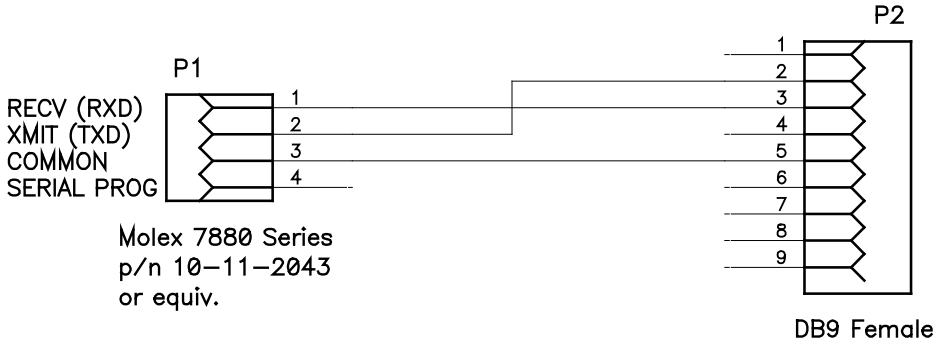

8.6.1 Serial Commands

The following commands are supported over the serial port communications interface.

A – Alarm Reset

This command allows viewing or resetting the alarm status. “A” with no parameter is used to read the alarm status. “A 1” is used to reset the alarm status. Note: When an alarm is detected by the system, the drive is immediately disabled.

B – AutoBalance

This command is used to invoke the autobalance algorithm. During autobalance the display will indicate “-“ (middle bar).

E – Enable Status

This command is used to set/view the enable state of the drive. Note: When an alarm is detected by the system, the drive is immediately disabled.

There are two modes of Enable operation, Software and Hardware. In Hardware mode, the drive enable is controlled by the hardware Enable input on J1. A low on this input Enables the drive. A high or open on this input disables the drive. The E command only allows viewing the enable state when in “hardware” enable mode.

Software enable mode is configured following a reset and BEFORE the hardware input is used. The drive will come up disabled and the E command can be used to enable (E1) or disable (E0) the drive. If at any time during software mode operation, the hardware input goes low, the drive reverts to hardware mode as described above.

F – Factory Defaults

This command is used to set all the parameters to the factory defaults. Use the “S” command to save the settings to NVM following the F command. By not automatically saving the defaults, the user can choose to go back to the original settings (that were in the drive before the F command was used) by resetting the drive.

H – Help

This command lists a summary of commands and their function.

L – List all parameters

This command lists all the user settable parameters and system readings to the display. The enable and alarm status are also shown.

M – Mode

This command is used to view or set the commutation mode of the drive. M0 sets trapezoidal commutation, M1 sets Sinusoidal 2 phase input commutation. The “M command can only be used to view the commutation setting if jumpers are installed.

R – Reset

This command causes the drive to perform a power on reset.

S – Save Parameters

This command saves the user selectable parameters to NVM.

Y – Display Fault History

The last 8 errors from the fault history buffer are displayed. If a fault occurs while the drive is enabled, the fault is saved into the fault history buffer. The last 8 errors are saved in NVM and recalled for display when this command is issued. Only errors that occur while the drive is enabled are stored. This prevents nuisance errors that commonly occur during startup/shutdown to be ignored.

YC – Clear Fault History

This command clears the fault history buffer in NVM. This command is useful after setting up a new system in production to be sure any setup errors are cleared.

YS – Display SOA Fault History

This command displays the last saved SOA trip information from NVM. In the event of an SOA trip, all the system parameters related to the trip are stored. This information is useful to the factory for troubleshooting SOA events.

8.6.2 Serial Parameter Settings

The user parameter settings are configured either by jumpers or via the serial interface. When jumpers are used, the serial interface can only be used to read the jumper settings. If no jumpers are installed, the software settings are used. If the configuration when using jumpers results in no jumpers being installed (Sine Mode with all minimum values), place a jumper on JP1-G. This will force the drive to read and use the jumper settings. The use of this jumper in Sine mode will not affect operation.

When no jumpers are installed, the settings are controlled from software using P values as shown below. To use the serial interface to configure the settings, remove all jumpers and use the values as described below for the Pn locations. Note that if *any* jumper is installed, *all* jumper settings will be read and used for setting the parameters.

P – Parameter Command

This command is used to view or set the user parameters and RAM locations in the drive. The following list shows software variables and their corresponding "P" access number. Be VERY careful when changing these values, as the software does not provide for protection from improper settings. Adverse settings may cause "undesirable" effects on the system.

The values for P0-P6 reflect the jumper settings as described above when jumpers are installed and cannot be changed from the serial interface. When no jumpers are installed, these values can be modified using the serial interface by changing the appropriate Pn value to configure the drive as if jumpers were present.

P0 Transconductance setting
P1 Absolute Overcurrent Trip setting
P2 Overcurrent Trip setting
P3 Overcurrent Trip Time setting
P4 Input Filter setting
P5 Sine/ Hall mode setting
P6 Current Loop Bandwidth setting
P7 Motor Reverse setting

Note: P8-P255 are system values that should not be changed by the user.

To set a parameter value, type P followed by the address (0-6) followed by a space followed by the value followed by <Enter> (Cr Lf). Refer to the next page for the P values and their settings.

Example: Set P1 Absolute Overcurrent Trip to 15.0 Amps.
Type: P1 1<Enter>
Drive response: 1

To view a parameter setting, type P followed by the address (0-6) followed by Enter.
Example: View the Overcurrent Trip setting:
Type: P2 <Enter>
Drive response: 1 (or whatever the present value is)

8.6.2.1 Software Parameter Setting Table Summary

P0 – Transconductance switch value

P0 Value	Transconductance Ratio	DAC Single End/Differential
0	0.8	Differential (Bipolar)
1	1.0	Differential (Bipolar)
2	1.2	Differential (Bipolar)
3	1.5	Differential (Bipolar)
4	0.8	Single Ended (Unipolar)
5	1.0	Single Ended (Unipolar)
6	1.2	Single Ended (Unipolar)
7	1.5	Single Ended (Unipolar

P1 – Absolute Overcurrent Level

P1 Value	Trip Level (See JP1-A JP1-B)
0	same as open open
1	same as in open
2	same as open in
3	same as in in

P2 – Overcurrent Trip Level

P2 Value	Trip Level (See JP1-E JP1-F)
0	same as open open
1	same as in open
2	same as open in
3	same as in in

P3 – Overcurrent Trip Time

P3 Value	Trip Time
0	1.25 Sec
1	2.5 Sec
2	5.0 Sec
3	10.0 Sec

P4 – Input Filter Setting

P4 Value	Input Filter Setting
0	500 Hz
1	2,500 Hz
2	10,000 Hz
3	20,000 Hz

P5 – Sine Hall Mode Setting

P5 Value	Sine Hall Setting
0	Sine
1	Hall

P6 – Open Loop Gain Setting (fixed configuration in some versions)

P6 Value	Current Loop Bandwidth
0	Contact
1	Factory
2	For
3	Settings

P7 – Motor Reverse Setting

Value	Motor Reverse Setting
0	Normal Direction for Halls
1	Reverse direction

9 Balancing

Motor phase balancing is performed to minimize torque ripple in the motor caused by impedance variations in the motor windings and to compensate for component tolerance variations in the amplifier drive circuits. The intent of this adjustment is to get the three motor voltages approximately equal taking into account polarity. Once the drive is balanced, the setting should not need to be changed as long as the drive operates with the same motor and at the same baseplate temperature as when the balance was performed

NOTE: Be sure the amplifier is at operating temperature when performing any balancing procedures. To achieve operating temperature, enable the amplifier with the motor load connected and monitor the baseplate temperature, either at TP2 (10°C/Volt) or using the "L" serial command.

There are two methods that can be used to balance the output phases, Autobalance and Manual Balance. For most cases, the Autobalance feature will balance the phases to an acceptable level. For other cases where the motor resistance may be very high, or exact phase balance must be obtained, the manual method should be used after the Autobalance to further "tweak" the offsets.

9.1 Autobalance

The drive has the ability to autobalance the phase offsets using an internal algorithm. The algorithm is initiated by holding the push button for longer than 1 second. The "B" command can also be used from the serial interface. Once started, the algorithm will display a "-" middle bar on the LED display. Depending on the amount of offset, the phase voltage and the load resistance, the amount of time spent in the Autobalance routine varies from about 5 seconds to about 30 seconds.

If the drive is unable to balance the phases, the routine exits and reports and Autobalance Fault (4) on the LED display.

Note: Be sure the motion controller is set to output 0vdc to the command input(s) and the motion controller is set for open loop mode (no feedback loop). This is very important, as the motor will not be able to move during this procedure.

The procedure for using the Autobalance feature:

1) Connect the motor in the normal manner.
2) Apply power to the system (Bias and Bus).
3) Set the motion controller to open loop mode (no feedback loop)
4) Set the motor so no motion is possible (lock down the stage).
5) Set the command input(s) to 0 volts and Enable the amplifier.
6) Press the Reset button S1 and hold for greater than 1 second. Confirm the middle bar on the LED display is showing. Release the button.
7) Once the procedure completes, the display will either show Enabled (0) or Autobalance Fault (4). If the drive is Enabled, the process has completed successfully. If a fault is shown, the phases will have to be balanced manually.

Note: The Autobalance function is typically able to balance a load with a resistance that falls within the range of 1 ohm to 10 ohms. The Autobalance function may not consistently balance loads outside this range. This does not indicate a problem with the amplifier. It means the load may need to be manually balanced. This is especially true if the manual balance pots have been moved from their factory center position. Once the load has been manually balanced and the pots re-centered, the Autobalance function will most likely work.

9.2 Manual Balance

The procedure to manually balance the phases is shown below. A voltmeter is required to measure the phase voltages. Refer to Figure 2 on the next page for the location of the balance pots.

The procedure to manually balance the phases:

1) With power off, connect the Phase A motor lead to J5-1. Connect Phase B motor lead to J5-4 (Common). Leave Phase C motor lead disconnected.
2) Apply power to the system.
3) Set the motor so no motion is possible (lock down or tape stage).
4) Set the command input to 0 volts and Enable the amplifier.
5) With a multi-meter set on the 2 VDC range, measure across the load (J5-1 to J5-4). Adjust potentiometer RV6, BAL A, until the meter reads 0.00 VDC.
6) Move the Phase A lead to J5-2 (Phase B). This puts the load from Phase B to common.
7) With a multi-meter set on the 2 VDC range, measure across the load (J5-2 to J5-4). Adjust potentiometer RV5, BAL B, until the meter reads 0.00 VDC.
8) Reconnect the motor leads normally: Phase A motor lead to J5-1, Phase B motor lead to J5-2, Phase C motor lead to J5-3.
9) With a multi-meter set on the 2 VDC range, measure across Phase C to common (J5-3 to J5-4). Adjust potentiometer RV5, BAL C, until the meter reads 0.00 VDC.

10 Test Points

Five user test points are provided on the amplifier, TP1-TP5. They are located at the top of the amplifier, between JP2 and the Pushbutton switch.

TP1 – I Out – This test point provides an analog voltage proportional to the current output of the amplifier. The scaling for this output is 6.6 amps per volt. Note that this value is the absolute value of instantaneous current from the phase with the highest magnitude of current. This is the same signal that is output on J1 pin 5.

TP2 – Heatsink Temperature – This test point provides an analog voltage proportional to the heatsink temperature, measured in the middle of the heatsink. This output is scaled at 10°C per volt.

TP3 – Common – This test point provides convenient access to amplifier common (ground).

TP4 – Command Phase A – This test point is connected to user Command Phase A voltage. The voltage at this pin is scaled to ¼ of the Command Phase A input voltage.

TP5 - Command Phase B– This test point is connected to user Command Phase B voltage. The voltage at this pin is scaled to ¼ of the Command Phase B input voltage.

Figure 3 – Location of Jumpers, Balance Potentiometers and Test Points

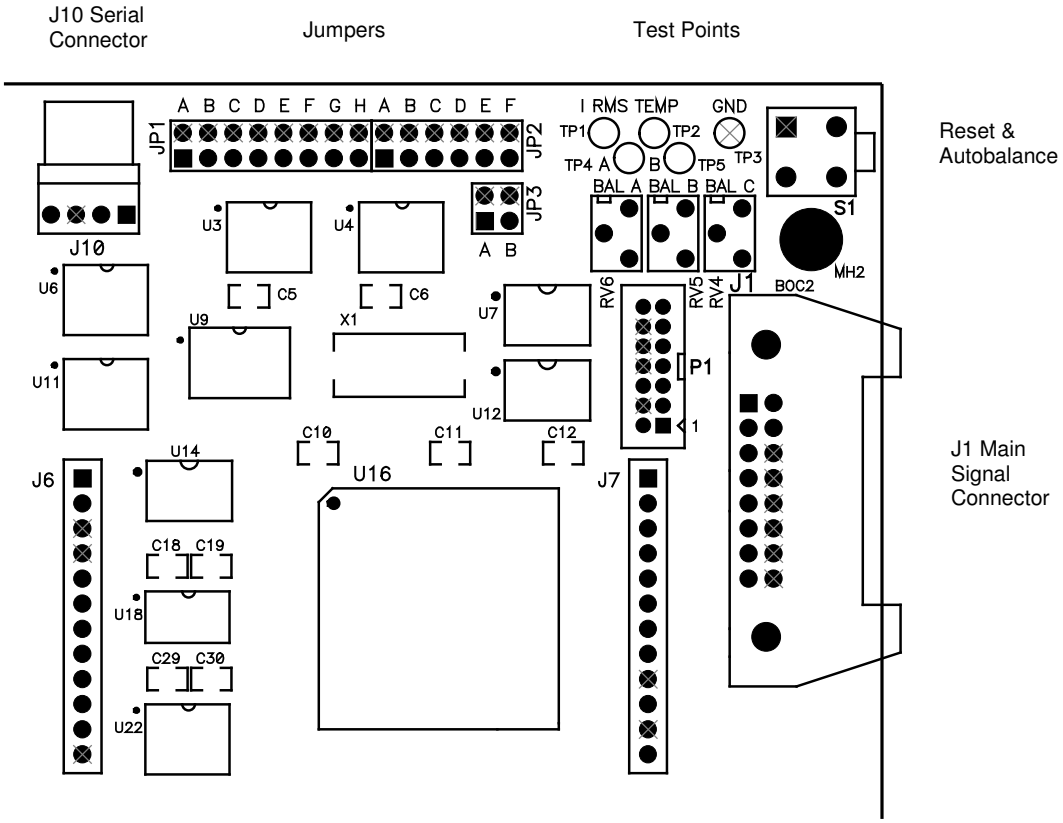

Figure 4. Functional Block Diagram – All Models

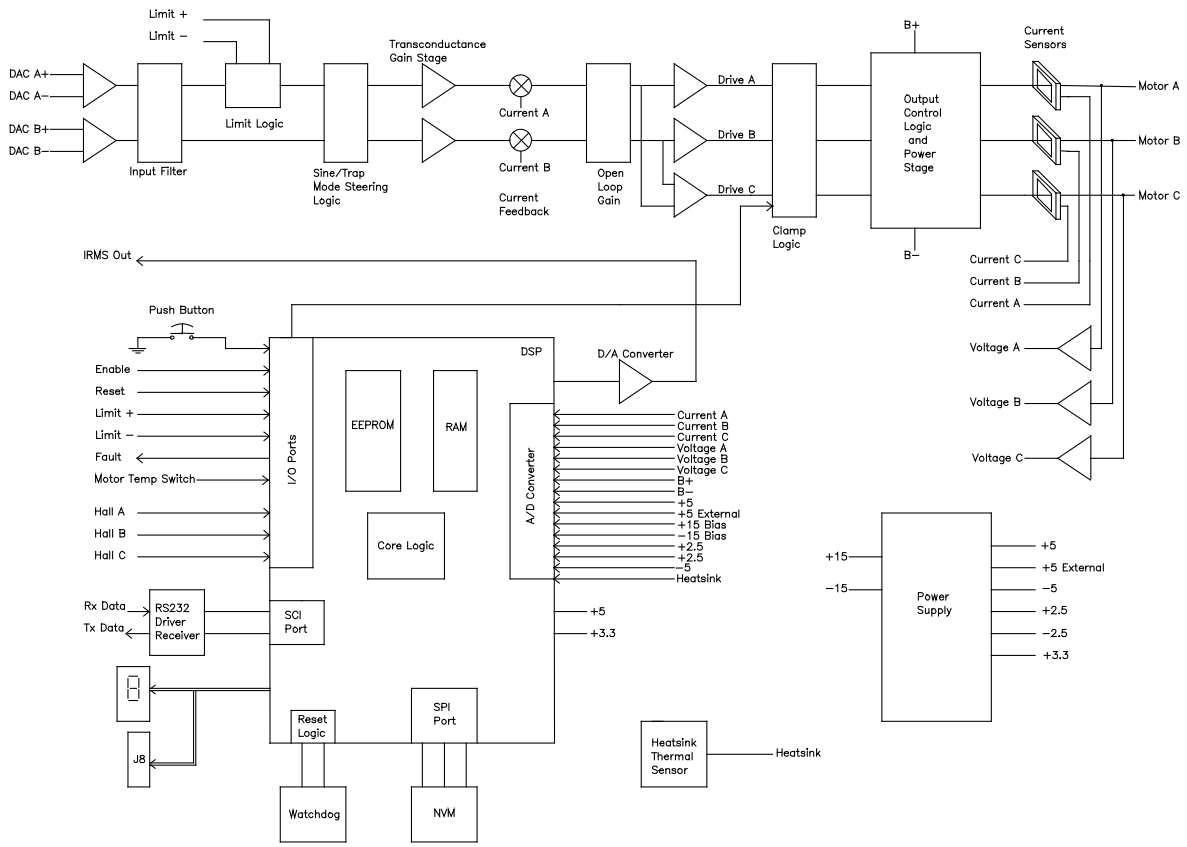

Figure 5. Installation Drawing Details

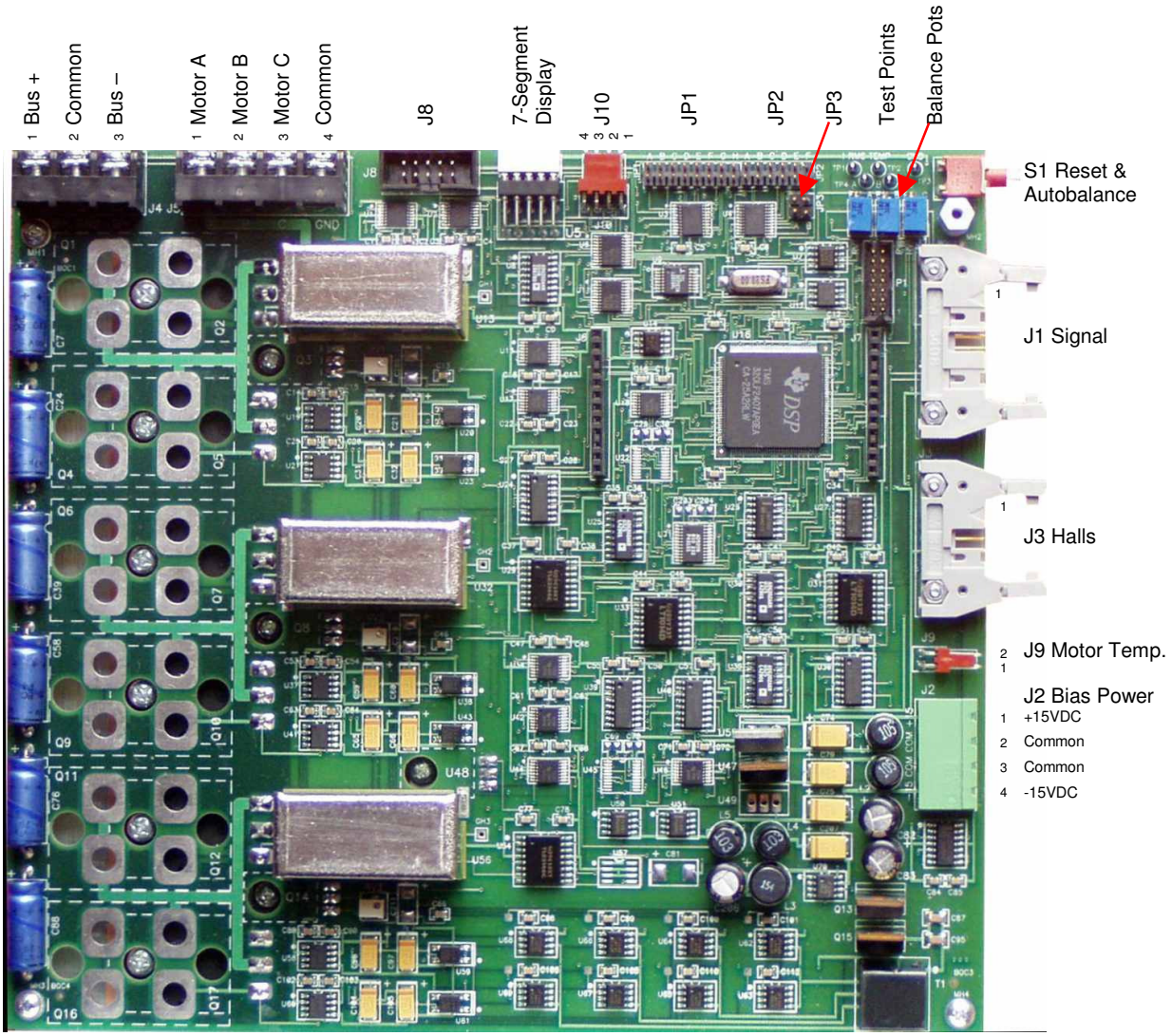

Figure 6. Typical Connections Single-Phase Models with “S” suffix

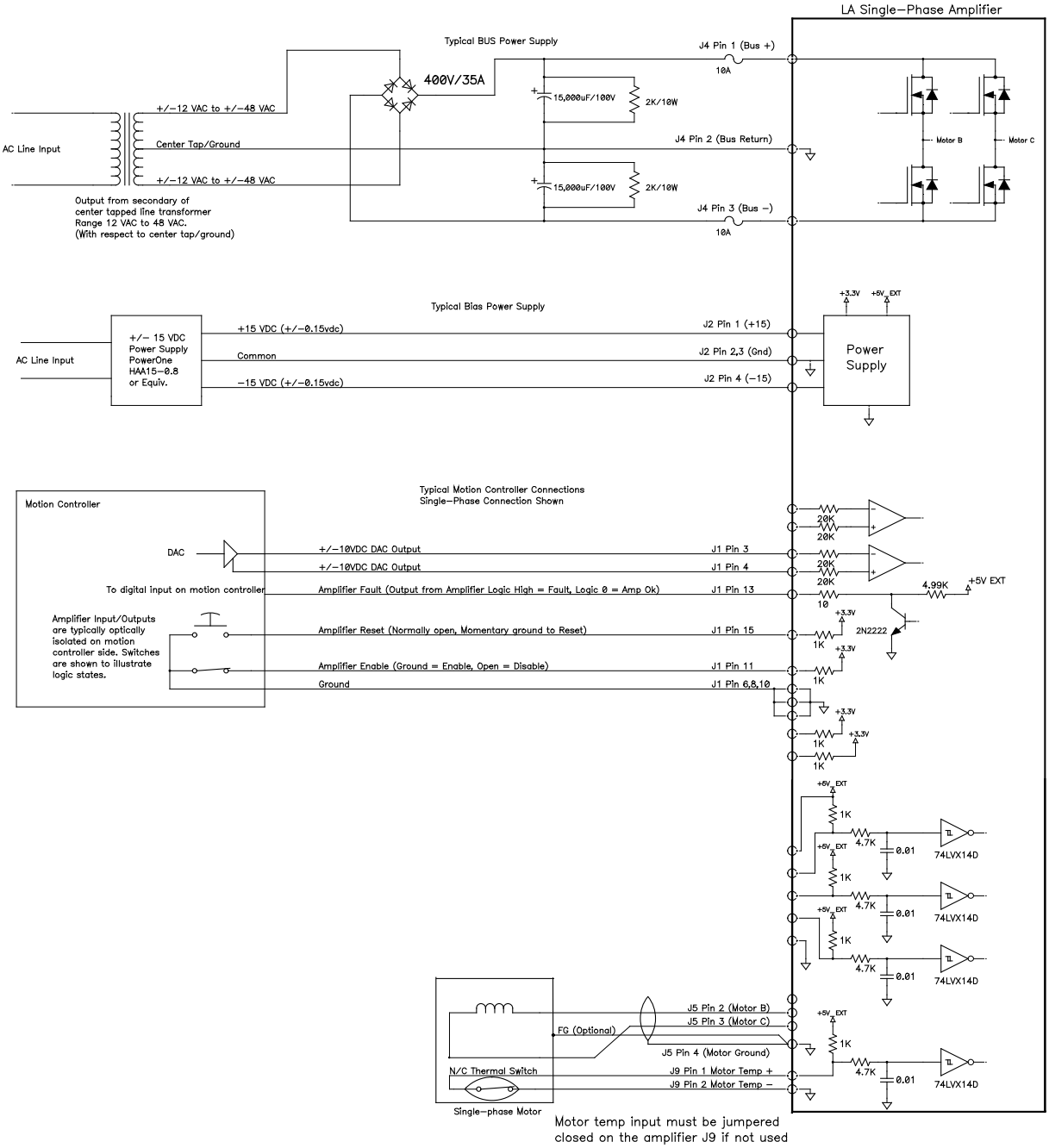

Figure 7. Typical Connections Three-Phase Models with “T” suffix

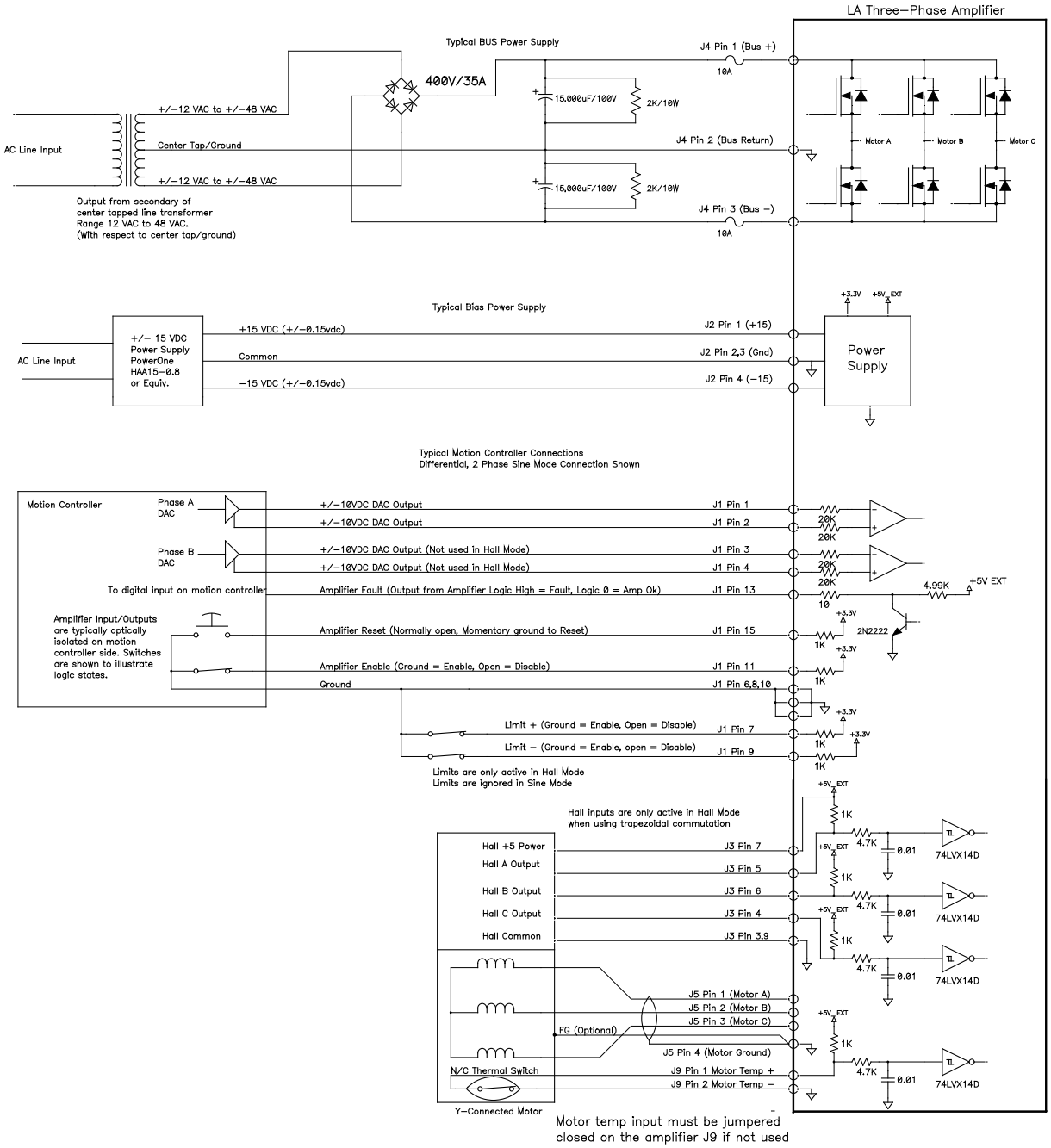

Figure 8. LA-800 Series Mechanical Dimensions

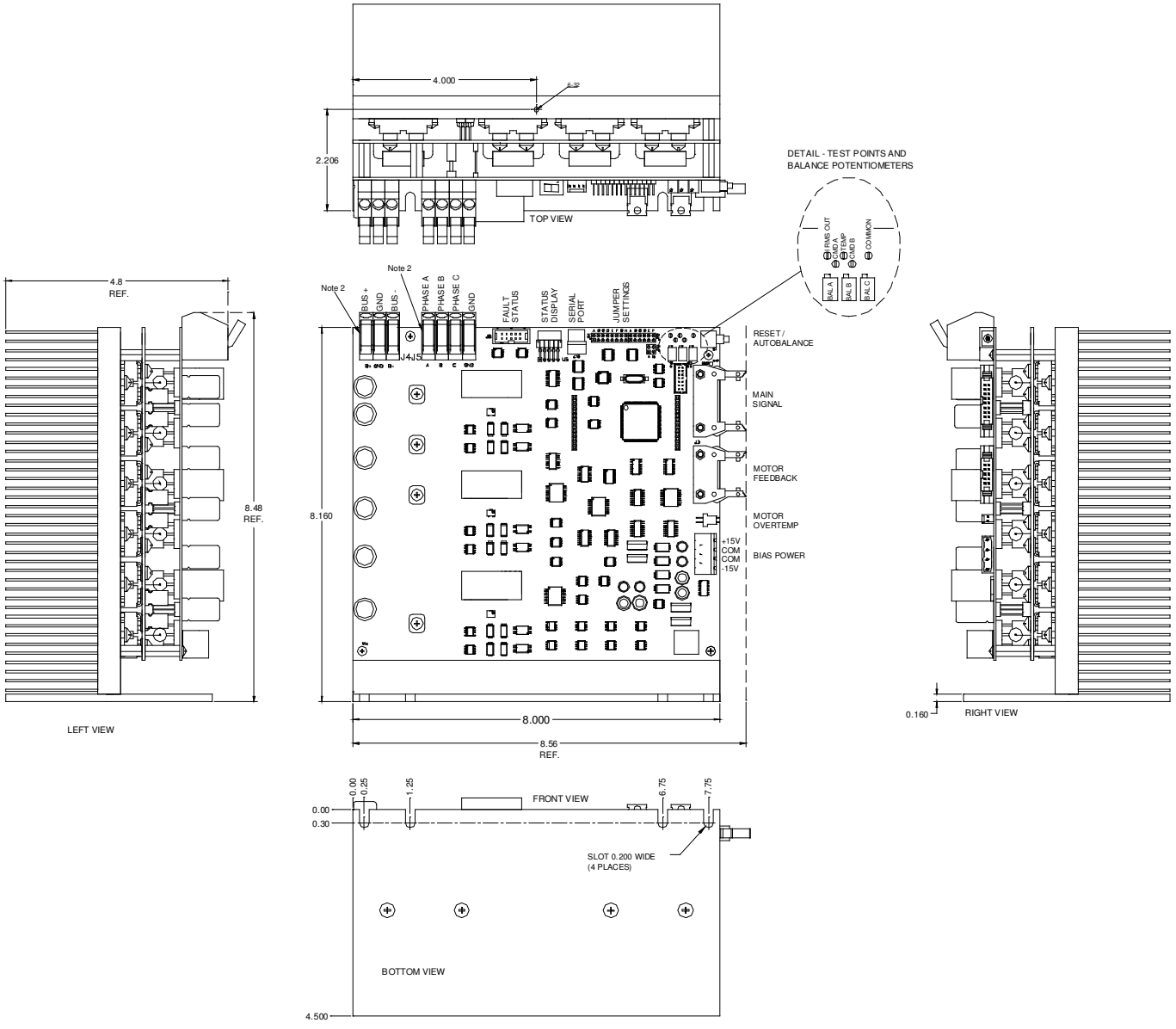

Figure 9. LA-1500 Series Mechanical Dimensions

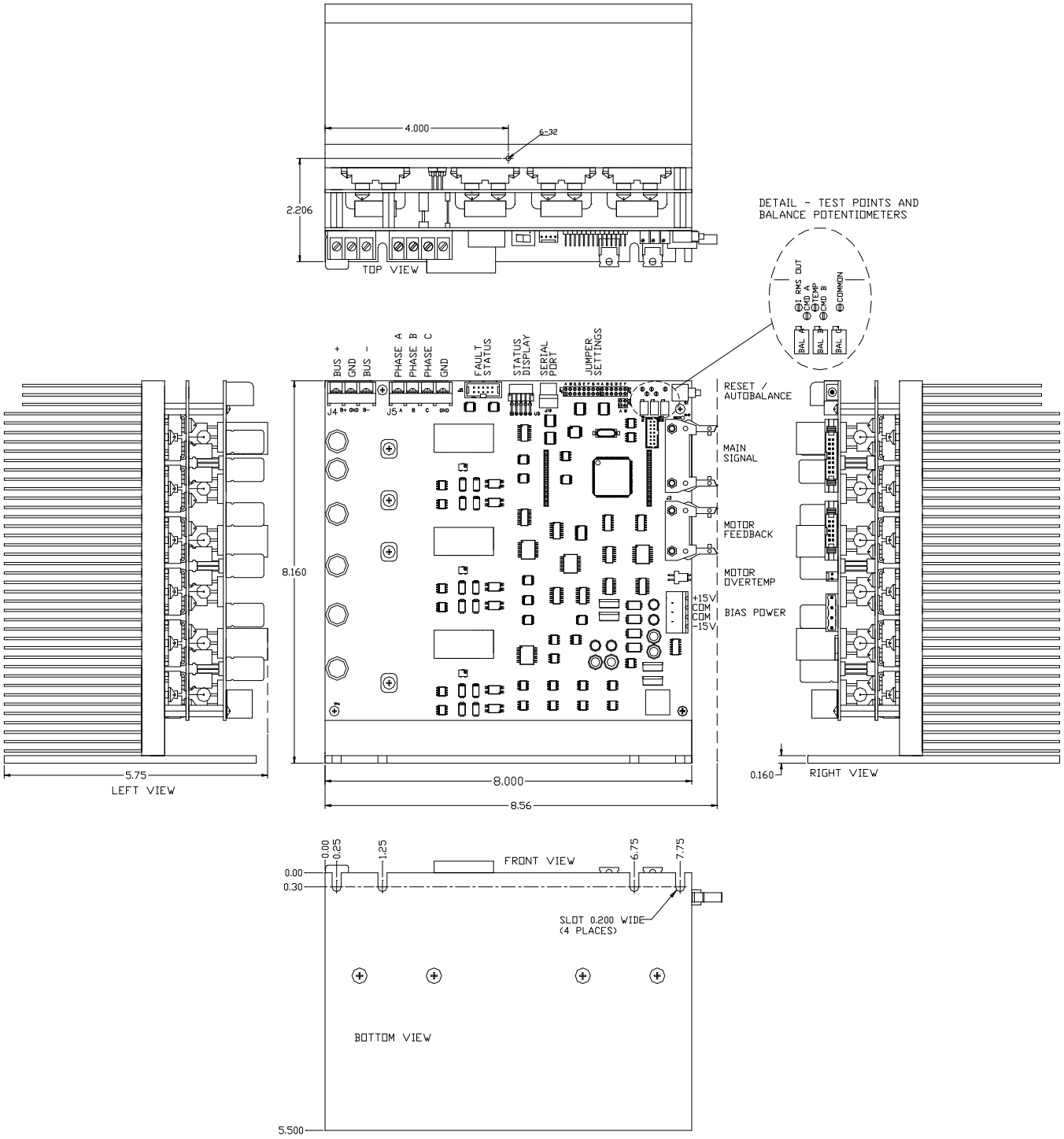

Appendix A. Serial Communication Messages

This section describes the details of the serial communication messages. The only white space character used in this protocol is the Space (ASCII 0x20). All lines are terminated with a Carriage Return and Line Feed (cr/lf) followed by a “>” prompt (ASCII 0x3E). The prompt is sent following any message by the amplifier. The prompt line has no termination in order to allow a dumb terminal cursor to remain on the prompt line. This provides a clear indication for the user when the amplifier is ready for a new command when using a dump terminal interface.

Some common characters used in this section are:
cr = Carriage Return, ASCII 0x0D
lf = Line Feed, ASCII 0x0A
> = Greater Sign (used as the prompt), ASCII 0x3E

When the amplifier is first powered up, the user must wait until the sign on message and the prompt are sent before normal communication can begin. The sending of the first prompt from the amplifier means it is ready for operation. If a fault alarm is present on power up, the fault message will be shown followed by a prompt.

All command sent to the unit must be in upper-case characters. Messages that the amplifier sends for a particular command or condition are a fixed length. Messages are padded with the space (ASCII 0x20) to achieve the desired length. As an example, all alarm messages are 14 characters in length.

All messages from the amplifier are shown in quotes to allow the programmer to determine the character count for each message. The quotes are not part of the message. Any blank lines sent by the amplifier are shown by the cr/lf sequence in the text shown below.

10.1 Sign on Message

Upon power up or following a reset, the amplifier sends the following message.

```
“Varedan Technologies, (c) 2007  Ver 4002-11-2.3.0-2”
“>”
```

In addition, if any faults are present, the fault status is show following the above message.

```
“Alarm = BUS UV”
“>”
```

10.2 Alarm Messages

Sent in response to “A” command or upon detection of alarm condition. 16 possible responses, 14 characters in length.

```
"Alarm = DSP   "
"Alarm = NVM   "
"Alarm = HALLS "
"Alarm = AMP OT"
"Alarm = MOT OT"
"Alarm = ABS OC"
"Alarm = RMS OC"
"Alarm = BUS OV"
"Alarm = BUS UV"
"Alarm = 5V REF"
"Alarm = 15VREF"
"Alarm = 2.5REF"
"Alarm = 5V EXT"
"Alarm = AUTOBL"
"Alarm = SOA   "
"Alarm = FATAL "
“>”
```

10.3 Autobalance Messages

In response to the “B” command:

If Autobalance can’t run:

```
“Drive Must Be Enabled to use this command”
“>”
```

While Autobalance is active:

```
“_“
```

(Prompt is sent upon completion of Autobalance)

```
“>”
```

10.4 Enable Status Messages

In response to the “E” command:
If disabled with alarm:

```
“DISABLED”
cr/lf
“Alarm = BUS UV”
“>”
```

If disabled without alarm:

```
“DISABLED”
“>”
```

If enabled:

```
“ENABLED”
“>”
```

10.5 Factory Default Message

In response to the “F” command:

```
"Loading Default Parameters"
“>”
```

10.6 Help Messages

In response to the “H” command:

```
“Command List”
“A<n> = Show/Reset Alarm Status”
“E<n>= Set/View Enable Status Enable=1 Disable=0”
“F = Load Factory Defaults”
“H = Help”
“L = List Parameters”
“M = View Mode”
“P Addr <data> = Set/View Parameter”
“R = Reset Drive”
“S = Save setting to NVM”
“T = SOA Trip Data”
“Y = Show Alarm History”
“YC = Clear Alarm History”
“YS = Show Saved SOA Fault Data”
cr/lf
“>”
```

10.7 List Messages

In response to the “L” command:

```
“Bus+= 0 V”
“Bus-=-0 V”
“Vpha= 0 V”
“Vphb= 0 V”
“Vphc= 0 V”
“Ipha= 0.0 A”
“Iphb= 0.0 A”
“Iphc= 0.0 A”
“+15 = 15.2 V”
“-15 =-15.2 V”
“+5  = 4.9 V”
“+5Ex= 4.9 V”
“+2.5= 2.50 V”
“-2.5=-2.50 V”
“Temp= 23 C”
cr/lf
“RMS Overcurrent,JP1-A,B (Amps): Off Off”
“RMS Trip Time, JP1-C,D (Sec): On Off ”
“Absolute Overcurrent, JP1-E,F (Amps): Off On ”
“Motor Direction Setting, JP1-H: Normal”
“Sine or Hall Mode, JP2-A: Sine”
“Input Filter Setting, JP2-B,C (kHz): On On  ”
“Transconductance Ratio, JP2-D,E: Off Off”
“Input Differential or Single Ended, JP2-F : Diff”
cr/lf
“DISABLED”
cr/lf
“Alarm = BUS UV”
“>”
```

Note that this is an example message. The actual message data depends on the values and status of the amplifier. If the amplifier is enabled, “ENABLED” is shown instead of “DISABLED”. The alarm message follows the alarm message formats as described earlier.

10.8 Mode Command Messages

In response to the “M” command, the amplifier responds with the following, depending on the jumper settings or the user setting for mode:

```
“Sine Current Mode”
“>”


“Trap Current Mode”
“>”
```

10.9 Save Parameters Message

In response to the “S” command:

```
“Saving Parameter”
“>”
```

10.10 Fault History Messages

In response to the “Y” command:

```
cr/lf
“Alarm History (Last to First)”
cr/lf
“Alarm = BUS UV”
cr/lf
“Alarm = 15VREF”
cr/lf
“Alarm = 15VREF”
cr/lf
“Alarm = BUS UV”
cr/lf
“Alarm = 15VREF”
cr/lf
“Alarm = ABS OC”
cr/lf
“Alarm = BUS UV”
cr/lf
“Alarm = BUS UV”
cr/lf
“>”
```

Note that this is just an example fault history. Actual results may vary, but all messages follow the format for the Alarm messages described earlier. If no history is stored, the amplifier responds with just a prompt.

10.11 Clear Fault History Message

In response to the “YC” command:

```
cr/lf
Alarm History Cleared
cr/lf
“>”
```

10.12 SOA Fault History Messages

In response to the “YS” command:

```
cr/lf
“Saved SOA History”
cr/lf
“Cnts= 0”
“MaxP= 0 W”
“ActP= 0 W”
“Bus+= 0.0 V”
“Bus-=-0.0 V”
“Vpha= 0.0 V”
“Vphb= 0.0 V”
“Vphc= 0.0 V”
“Ipha= 0.0 A”
“Iphb= 0.0 A”
“Iphc= 0.0 A”
“Temp= 0 C”
cr/lf
“>”
```

Note that this is an example message. Actual results will be displayed in the event of an actual SOA trip.