

LA6U Series Linear Amplifier Modules
VPS-LA6U Power Supply Modules
VRS-LA6U Series Multi-Axis Rack Systems

Technical Reference Manual

CONTACT INFORMATION

Varedan Technologies
3860 Del Amo Blvd., Suite 401
Torrance, CA 90503

Phone: 310-542-2320
Fax: 310-542-2344

代理商：北京慧摩森电子系统技术有限公司
地址：北京市朝阳区幺家店路甲1号玲珑文创园106
电话：010-62311872
传真：010-62316782
邮箱：sales@bjsm.com.cn

www.varedan.com

Original Manual Revision October 8, 2016
Copyright 2016 Varedan Technologies

This document contains proprietary and confidential information of Varedan Technologies, LLC and is protected under Federal copyright law.

The information in this document is subject to change without notice. No part of this document may be reproduced or transmitted in any form without the express written consent of Varedan Technologies, LLC.

Warranty Information

Varedan Technologies warrants this product series to be free of manufacturing defects for a period of one year.

If your product requires service, please contact our factory for troubleshooting information and if needed, return material authorization (RMA) information.

CAUTION! READ THIS SECTION BEFORE PROCEEDING.

Warning! Potentially lethal voltages exist within the amplifier when power is applied. Never attempt to handle or probe the amplifier with power applied.

This product contains static sensitive devices and requires proper handling with ESD protection.

These amplifiers are capable of producing large amounts of energy. Serious injury or death can result from improper motor or load movement. The amplifier requires an external controller for Sinusoidal mode operation to commutate the motor properly. In Trapezoidal mode operation, the amplifier requires properly phased Hall sensors for commutation. Verify proper Hall sensor phasing and motor direction before connecting any load to a motor.

Do not connect the motor to the system load during initial testing and installation.

These amplifiers require customer supplied airflow for proper operation. Operation of the amplifier without proper cooling will void the warranty. Contact the factory for information on adequate airflow for your application.

Be sure power is off when inserting or removing connectors or connections.

For motors with a phase to phase inductance of less than 250uH, please consult the factory. A special set of current loop bandwidth components will need to be installed for safe operation of the amplifier.

代理商：北京慧摩森电子系统技术有限公司
地址：北京市海淀区学院路7号弘彧大厦1510
电话：010-62311872
传真：010-62316782
E-mail:sales@bjsm.com.cn www.bjsm.com.cn
varedan中文网址：www.varedan.net

Contents

1 VRS-LA6U Rack System Quick Start Guide....6
1.1 Configure LA6U amplifier IO Jumpers....6
1.2 Secure All Cards in Rack Front Panel....6
1.3 Power up the system without Bus or Motors....6
1.4 Configure the software settings for each amplifier....7
1.5 Power down the system....8
1.6 Install the Bus Input cabling....8
1.7 Install Motor cabling to each amplifier....8
1.8 Install all remaining cabling....8
1.9 Power up the fully configured system....9
1.10 Normal operational....9
2 VRS-LA6U Series Multi-Axis Rack Systems....10
2.1 VRS-LA6U Introduction....10
2.2 VRS-LA6U Features....11
2.3 VRS-LA6U Rack Systems Specifications....11
2.4 VRS-LA6U Series Rack System Product Model Numbering....12
2.5 VRS-LA6U-2A Series Basic Rear View....14
2.6 VRS-LA6U-5A Series Basic Rear View....15
2.7 VRS-LA6U Backplane Connector Pinouts....16
2.7.1 VRS-LA6U Series Bus Input....16
2.7.2 VRS-LA6U Series Motor Output....16
2.7.3 VRS-LA6U Series Main Signal....17
2.7.4 VRS-LA6U Series Backplane RS232....18
2.7.5 VRS-LA6U Series Aux IO / Current Monitors....19
2.8 VRS-LA6U System Bus Power Input Connections....20
2.8.1 3-Phase AC Transformer Bus Input Connections....20
2.8.2 1-Phase AC Transformer Bus Input....21
2.8.3 DC Supply Power Input....22
3 LA6U Series Linear Amplifier Modules....23
3.1 LA6U Amplifier Introduction....23
3.2 LA6U Amplifier Features....24
3.3 LA6U Amplifier Module Specifications....24
3.3.1 LA6U Amplifier Series Basic Overview....24
3.3.2 LA6U Amplifier Series Spec Breakdown....25
3.4 LA6U Amplifier Motor Configuration Operational Modes....26
3.5 LA6U Amplifier Model Numbering....27
3.6 “Standard” Amplifier Model Configuration Options....29
3.6.1 LA6U-525I1-01 Configuration Options....29
3.6.2 LA6U-525T1-01 Configuration Options....30
3.7 LA6U Amplifier Protection Features....31
3.7.1 LA6U Amplifier Safe Operating Area (SOA) Over Power Protection....31
3.8 LA6U Amplifier Front Panel....32
3.9 LA6U Amplifier Motor Configurations....33
3.9.1 Motor Case/Shield Connection Point....33
3.9.2 LA6U Amplifier T-Mode Motor Connections....33

3.9.3 LA6U Amplifier S-Mode Motor Connections....34
3.9.4 LA6U Amplifier I-Mode Motor Connections....35
3.10 LA6U Amplifier Command Input....36
3.11 LA6U Amplifier Current Monitor Output....36
3.12 LA6U Amplifier Physical Configuration Jumpers....37
3.12.1 Digital I/O Inputs....38
3.12.2 Digital I/O Outputs....40
3.13 LA6U Amplifier Software Configuration using USB or RS232 serial port....42
3.13.1 PC Based Terminal Options....42
3.13.2 Serial Port Software Configuration....42
3.13.3 Front Panel USB Virtual COM Port Drivers....42
3.13.4 LA6U Amplifier Software Command List....43
3.14 LA6U Amplifier Front Panel Status Display Codes....54
3.15 LA6U Amplifier Motor Phase Voltage Balancing....55
3.15.1 Auto-Balance....55
3.15.2 Manual Balance....55
4 VPS-LA6U Power Supply Modules....56
4.1 VPS-LA6U Power Supply Introduction....56
4.2 VPS-LA6U Power Supply Features....57
4.3 VPS-LA6U Power Supply Module Specifications....57
4.4 VPS-LA6U Power Supply Model Numbering....58
4.5 VPS-LA6U Front Panel....59
4.6 VPS-LA6U Fuses....59
5 Physical Dimensions....60
5.1 Rack Systems....60
5.1.1 VRS-LA6U-2A....60
5.1.2 VRS-LA6U-5A....61
5.2 LA6U Amplifier Modules....62
5.2.1 LA6U-400 and LA60-500 Series Card Modules....62
5.3 VPS-LA6U Power Supply Modules....63
6 Backplane Connector Pinouts....64
6.1 LA6U Amplifier Backplane Connector Basic Pinouts....64
6.2 VPS-LA6U Power Supply Backplane Connector Basic Pinouts....70
7 Document Revisions....74

1 VRS-LA6U Rack System Quick Start Guide

This section will walk through the connection, configuration, and setup procedures to get a basic system up and running.

1.1 Configure LA6U amplifier IO Jumpers

Ensure each amplifier has the correct IO jumper configurations to match your controller interface. If a _CustomerConfigCode has been assigned, then the amplifier modules will come pre-configured. If no _CustomerConfigCode was assigned, the amplifiers will be shipped in the Fully Opto-Isolated configuration. If you need a different configuration such as internally pulled up to +5V, you will need to remove the amplifier cards and install the correct jumpers.

See the following section for more information on IO jumper configuration:

LA6U Amplifier Physical Configuration Jumpers

1.2 Secure All Cards in Rack Front Panel

Once the LA6U Amplifier card IO jumpers are configured, install all amplifier cards and power supply card into the rack enclosure. Ensure all cards are fully seated and have both the top and bottom attachment screws tightened. Do not install or remove any cards while system power is applied to the VRS-LA6U systems.

See the following sections for the LA6U Amplifier and VPS-LA6U Power supply front panels:

LA6U Amplifier Front Panel

VPS-LA6U Front Panel

1.3 Power up the system without Bus or Motors

It is important to have the amplifiers in a configured state before connecting the Motors and Bus power.

With all Motor and Bus cabling disconnected, install the IEC AC cable into the Aux-AC connector at the back of the rack. On the front panel of the VPS-LA6U power supply, toggle the power switch to the ON position to power up the system voltages on the backplane. If installed, the cooling fans will spin up and the front panel status display for the amplifier should show the status.

All amplifiers should show the “U” status character on the status displays signifying a Bus Under-voltage condition. This is expected as no Bus voltage is connected at this time.

1.4 Configure the software settings for each amplifier

Using either the front panel USB or the backplane DB9 RS232 port, connect a computer terminal to the amplifiers and configure the software settings for each amplifier in the VRS-LA6U rack system.

If a full configuration file was previously created, load that configuration file now through the terminal interface. If no configuration file exists, manually set each software setting to the desired value.

Refer to the command list section of this document at the following link for command descriptions:

LA6U Amplifier Software Command List

Refer to the specific model LA6U amplifier configuration sheet for hardware settings

The following software settings should be configured:

1) EXTENABLE
2) ENABLELEVEL
3) FAULTLEVEL
4) RMSLEVEL
5) RMSTIME
6) ABSLEVEL
7) OTLEVEL
8) ABFILTER
9) ABBANDWIDTH
10) ABTRANS
11) CMDRANGE

If the amplifiers are configured in I-Mode, also set the following I-Mode specific settings.
12) CFILTER
13) CBANDWIDTH
14) CTRANS

1.5 Power down the system

Move the front panel power switch on the VPS-LA6U module to the OFF position to power down the rack system. The status display on each amplifier should be off and the fans should not be spinning.

1.6 Install the Bus Input cabling

Connect the high power Bus voltage cabling to the VRS-LA6U rack system “Bus Input” connector. In most cases this will be the secondary of a 3-Phase center-tapped transformer.

Refer to the following section for more information on Bus Input configurations:

VRS-LA6U System Bus Power Input Connections

1.7 Install Motor cabling to each amplifier

Connect the motor(s) to each amplifier based on the factory configured operational modes (T-Mode, S-Mode, I-Mode).

Refer to the following section for more information on Motor Connections and configurations:

LA6U Amplifier Motor Configurations

1.8 Install all remaining cabling

Install any remaining backplane connectors for each amplifier. This includes the “Main Signal” connectors, “Aux IO / Current Monitors” connectors, and “Backplane RS232” connectors if used.

Refer to the following section for more information on Backplane connector pinouts and mates:

VRS-LA6U Backplane Connector Pinouts

1.9 Power up the fully configured system

Move the front panel power switch on the VPS-LA6U module to the ON position to power up the backplane system voltages. Each LA6U amplifier module should show a status character.

Energize your Bus voltage input power source. This is typically connecting the primary of the 3-Phase transformer to the 3-Phase AC source.

1.10 Normal operational

At this point the system should be configured and ready for normal operation. If the amplifier modules are in the Disabled state, the status display should show a “C”. If the Enable is active, the status display should show an “O” character for normal operation.

Refer to the following section for more information about amplifier status display codes:

LA6U Amplifier Front Panel Status Display Codes

2 VRS-LA6U Series Multi-Axis Rack Systems

2.1 VRS-LA6U Introduction

The VRS-LA6U Varedan Rack Systems build upon the proven performance and reliability of Varedan Technologies LA Series linear amplifiers and VPS power supplies by enabling the creation of compact and modular multi-axis packages in the industry standard rack mountable 6U form factor.

A complete multi-axis system of up to five LA6U linear amplifier modules and one VPS-LA6U power supply module can be installed in a standard dimension 19 inch rack reducing system wiring and system complexity. The pluggable LA6U linear amplifier modules are available in multiple power levels and motor configurations including three-phase brushless, single-phase brush/voice coil, and the new “Independent” configuration capable of driving three separate single phase loads from each LA6U amplifier module. This allows the engineer to create and configure up to an impressive 15 axis high power precision linear motion control solution with one 6U size 19 inch rack mountable enclosure.

Varedan VRS modular rack systems are currently available in 2 module (VRS-LA6U-2A) or 5 module (VRS-LA6U-5A) versions. Each system accepts a slide-in power supply (VPS-LA6U) connected to each amplifier module through the system backplane at the rear of the enclosure. The VRS Series enclosures can be used as stand-alone units or mounted in Standard 19 inch equipment racks. Multiple cooling options are available.

Custom rack enclosures and intelligent backplanes are available.
Please consult a Varedan applications engineer.



VRS-LA6U-5A

VRS-LA6U-2A



2.2 VRS-LA6U Features

- Easily construct modular multi-axis Linear Amplifier systems: Up to 15axis per rack system
- Standard 19in rack 6U form factor
- Integrated fan cooling options
- Simplifies system wiring and integration
- Simplifies system maintenance
- Accepts all LA6U series amplifier cards
- Accepts all VRS-LA6U power supply cards
- Desk mount or 19in rack mount options
- Standard multi-vendor backplane connector options
- Intelligent Amplifier/PowerSupply - Backplane communications options

2.3 VRS-LA6U Rack Systems Specifications

	VRS-LA6U-2A	VRS-LA6U-5A
Power Supply Card Slots	1	1
Amplifier Card Slots	2	5
Optional Cooling Fans	1	3
Standard 19in Rack Mounting	Yes (With Adapter Kit)	Yes
Compatible Power Supply Modules	VPS-LA6U Series	
Compatible Amplifier Modules	LA6U-400 Series, LA6U-500 Series	
Power Supply Power Levels	Up to +/-150V, +/-60A (See VPS-LA6U Specifications)	
Amplifier Power Levels (per slot)	Up to 40A, 3000W (See LA6U Amplifier Specifications)	
Dimensions – L x W x H (Inches)	11.2in x 12.1in x 10.5in	18.9in x 12.1in x 10.5in
Rack Weight Empty – No cards (lb) (Add card weights for final system)	9.2	18.8
Optional Fan Assembly Dimensions	1.7in (2U)	

2.4 VRS-LA6U Series Rack System Product Model Numbering

Characters in **RED** (W,X,Y,Z) are configuration fields. Fields 1-4 are required.

Field Number		1			2		3		4
VRS-LA6U	-	**W**	A	-	**XX**	-	**YY**	-	**ZZ**

Part Number Break Down by Field Number:

Field Number	Description	Present Options	Notes
VRS-LA6U	Varedan Rack Systems for 6U Linear Amplifiers		Product Series,
1	Number of Amplifier Slots Available	2 = up to 2 Amplifier Cards 5 = up to 5 Amplifier Cards	Required,
2	Unique Configuration Code for VRS Rack Enclosure Itself. Includes Fan, Backplane, and Metalwork Configurations.	Contact Varedan Engineering	Required, Assigned by Varedan Engineering
3	Unique Configuration Code for LA6U Amplifier modules and their locations as installed at the factory	00 = No Amplifiers Installed	Required, Assigned by Varedan Engineering
4	Unique Configuration code for the VPS-LA6U Power Supply Module as installed at the factory	00 = No Power Supply Installed	Required, Assigned by Varedan Engineering

Continued….

Characters in **RED** (W,X,Y,Z) are configuration fields. Fields 1-4 are required.

Field Number		1			2		3		4
VRS-LA6U	-	**W**	A	-	**XX**	-	**YY**	-	**ZZ**

A valid fully configured VRS-LA6U Series Rack System part number will include all of the above fields 1-4. Such a number will uniquely define the full rack system configuration at the time of shipping from the factory.

The “XX”, “YY”, and “ZZ” fields 2-4 are assigned by the Varedan Applications Engineering team based on specific customer application requirements. These fields are incremental and the digits themselves have no inherent significance.

While general product series numbers are sometimes used for budgetary pricing such as “VRS-LA6U-2A Series”, only valid fully configured part numbers should be used on Purchase Orders. If changes are made to a system during the engineering process, the final assigned fully configured part number should be updated in all systems and used on all future orders. This will help ensure product orders are accurate and complete and minimize production delays associated with confirming fully configured part numbers based on customer requirements.

2.5 VRS-LA6U-2A Series Basic Rear View

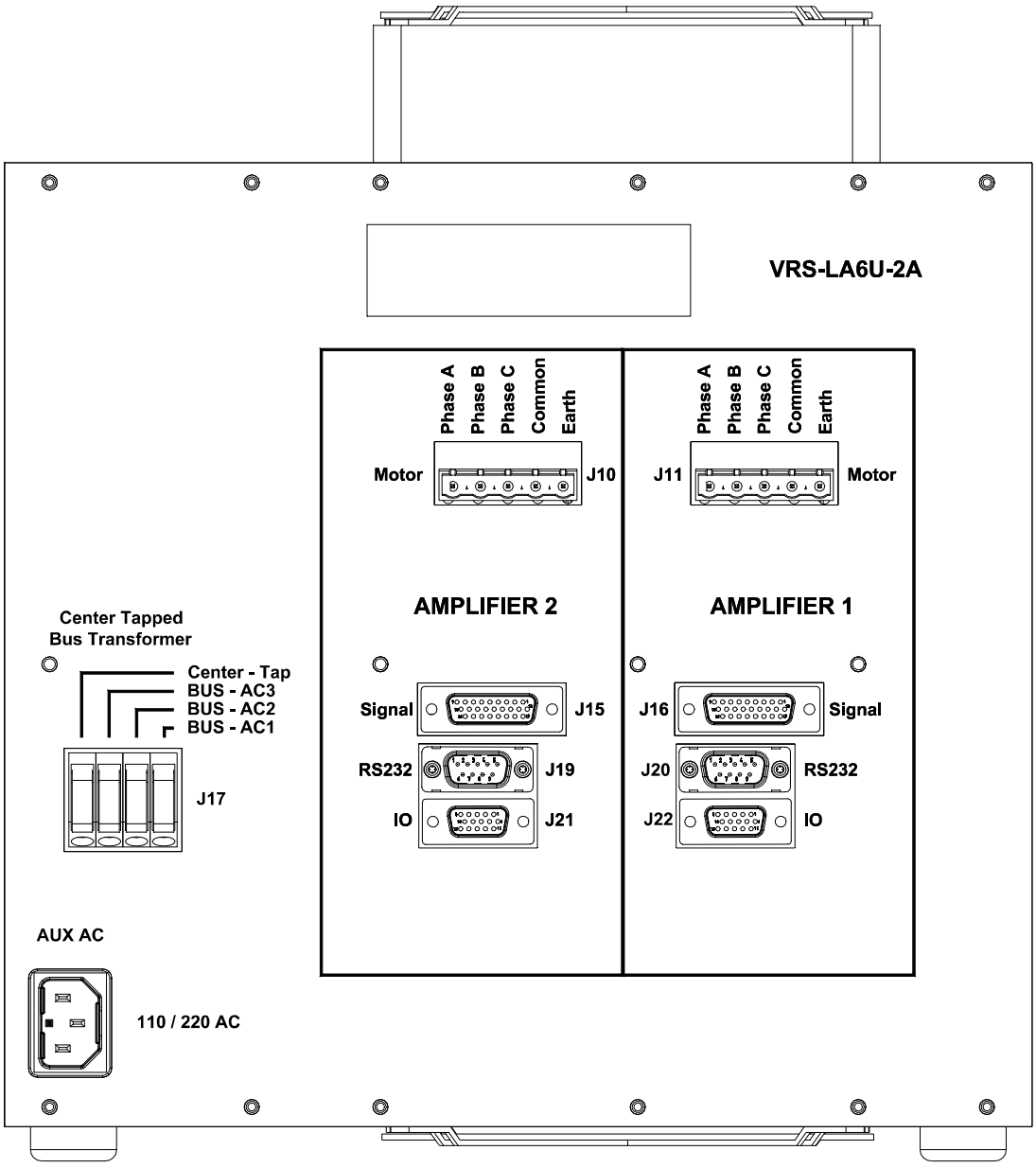

2.6 VRS-LA6U-5A Series Basic Rear View

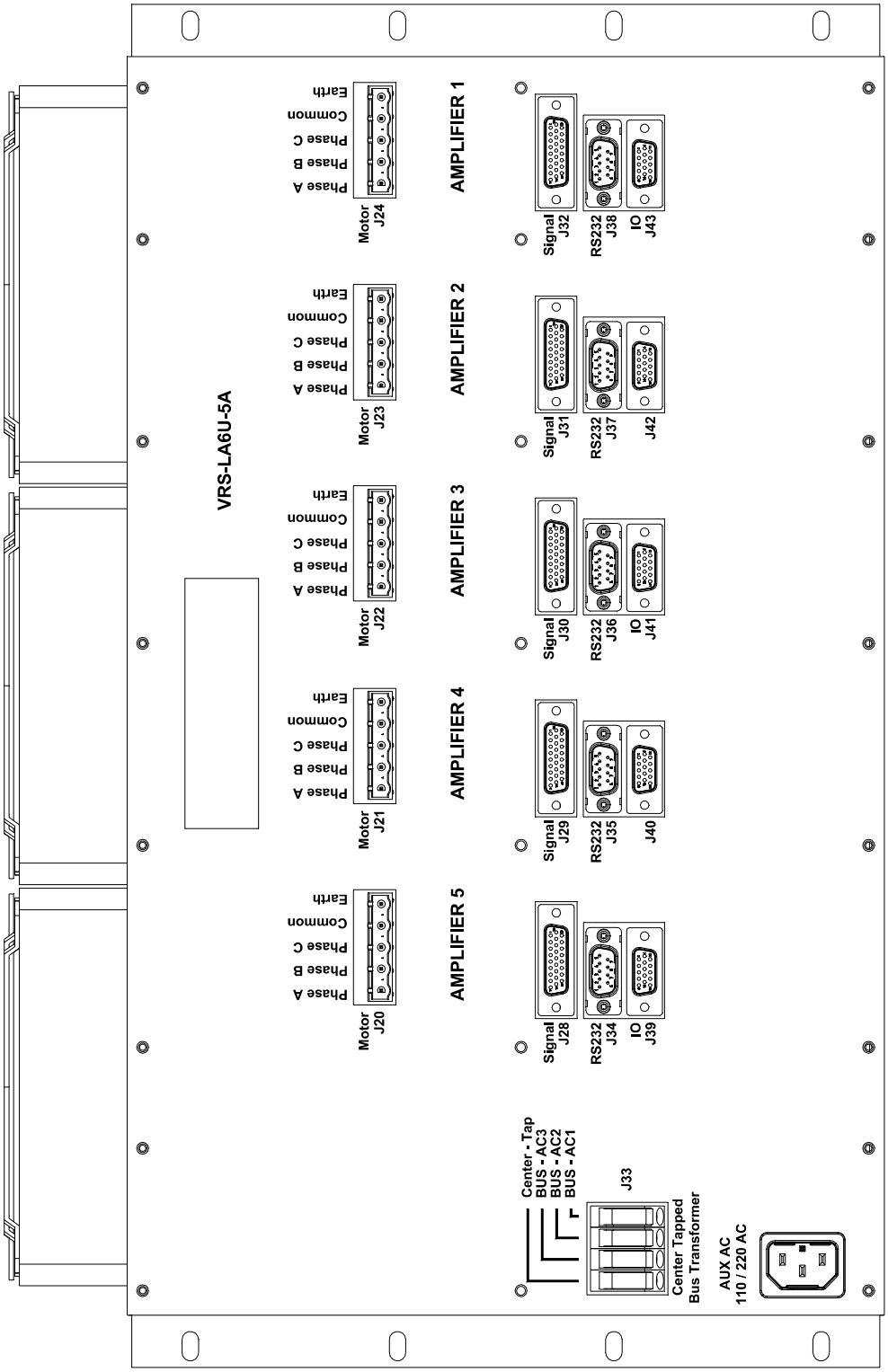

2.7 VRS-LA6U Backplane Connector Pinouts

Each amplifier location on the VRS-LA6U Series backplane has identical connector pinouts.

2.7.1 VRS-LA6U Series Bus Input



Bus Input
VRS-LA6U-2A = J17
VRS-LA6U-5A = J33
Transformer isolated 3-Phase AC with Center-Tap Recommended.
Must use appropriate wire gauge for required current levels
Backplane Connector = Wago 2706-104

Pin Number	Signal	Description
1	Bus - AC1	3Phase - Transformer Secondary 1
2	Bus - AC2	3Phase - Transformer Secondary 2
3	Bus - AC3	3Phase - Transformer Secondary 3
4	Center - Tap	Transformer Secondary Center-Tap

AuxAC – Low Voltage System Power Supply Input
90VAC to 240VAC
Standard IEC Type C14 connector – 10A rated



2.7.2 VRS-LA6U Series Motor Output

VRS-LA6U-2A = (J10, J11)
VRS-LA6U-5A = (J20, J21, J22, J23, J24)
Backplane Connector = Male, shrouded, 7.62mm, vertical, 5 pin
Mating Connector = On-Shore Technology EDZ960/5 or equivalent.



Pin Number	Signal	Direction	Description
1	PHASE A	Out	Motor Phase A Connection
2	PHASE B	Out	Motor Phase B Connection
3	PHASE C	Out	Motor Phase C Connection
4	COMMON	In / Out	Power Common
5	EARTH	In / Out	Earth connection to chassis

2.7.3 VRS-LA6U Series Main Signal



VRS-LA6U-2A = (J15, J16)
VRS-LA6U-5A = (J28, J29, J30, J31, J32)
Backplane Connector = Female, D-Sub, High Density, Vert, 26 pin
Mating Connector = Amphenol 17EHD-026-P-AA-0-00 or equivalent.

Pin Number	Signal	Direction	Description
1	Command A+	In	Positive Phase A current command
2	Command A-	In	Negative Phase A current command
3	COMMON	---	Signal common
4	Command B+	In	Positive Phase B current command
5	Command B-	In	Negative Phase B current command
6	COMMON	---	Signal common
7	Command C+	In	Positive Phase C current command (Only used in I-Mode)
8	Command C-	In	Negative Phase C current command (Only used in I-Mode)
9	COMMON	---	Signal common
10	COMMON	---	Signal common
11	ABSI OUT	Out	Synthesized current monitor / Analog output
12	COMMON	---	Signal common
13	INPUT_OPTO_COMMON	In	Opto-Isolated Input Common (Note1)
14	ENABLE	In	Enable Input (Note1)
15	RESET	In	Reset Input (Note1)
16	User In 1	In	Digital Input 1 (Note1)
17	User In 2	In	Digital Input 2 (Note1)
18	Output Opto Pullup	Out	Opto-Isolated Output Pull-Up (Note2)
19	FAULT	Out	Fault Output (Note2)
20	User Out 1	Out	Digital Output 1 Output (Note2)
21	User Out 2	Out	Digital Output 2 Output (Note2)
22	OUTPUT_OPTO_COMMON	Out	Opto-Isolated Output Common (Note2)
23	LIMIT+	In	Positive Limit Input
24	LIMIT-	In	Negative Limit Input
25	COMMON	---	Signal common
26	COMMON	---	Signal common

2.7.4 VRS-LA6U Series Backplane RS232



VRS-LA6U-2A = (J19, J20)
VRS-LA6U-5A = (J34, J35, J36, J37, J38)
Backplane Connector = Male, D-Sub, vert , 9 pos
Mating Connector = Assmann A-DF-09-LL/Z or equivalent.

Pin Number	Signal	Direction	Description
1	No Connect	---	---
2	RS232 RX	In	RS232 Receive
3	RS232 TX	Out	RS232 Transmit
4	No Connect	---	---
5	COMMON	---	Signal common
6	No Connect	---	---
7	No Connect	---	---
8	No Connect	---	---
9	No Connect	---	---

2.7.5 VRS-LA6U Series Aux IO / Current Monitors



VRS-LA6U-2A = (J21, J22)
VRS-LA6U-5A = (J39, J40, J41, J42, J43)
Backplane Connector = Female, D-Sub, High Density, Vert, 15 pin
Mating Connector = Amphenol 17EHD-015-P-AA-0-00 or equivalent.

Pin Number	Signal	Direction	Description
1	+5VDC Out	Out	+5VDC Out
2	COMMON	---	Signal common
3	Analog Current Monitor - C	Out	Analog bipolar current monitor for motor phase C
4	Analog Current Monitor - B	Out	Analog bipolar current monitor for motor phase B
5	Analog Current Monitor - A	Out	Analog bipolar current monitor for motor phase A
6	COMMON	---	Signal common
7	No Connect	---	---
8	No Connect	---	---
9	No Connect	---	---
10	AutoBalance	In	Initiates The Phase Voltage Autobalance Routine
11	Spare IO 1	In / Out	Non-Isolated Digital IO 1, 0-5V
12	Spare IO 2	In / Out	Non-Isolated Digital IO 2, 0-5V
13	Spare IO 3	In / Out	Non-Isolated Digital IO 3, 0-5V
14	Spare IO 4	In / Out	Non-Isolated Digital IO 4, 0-5V
15	COMMON	---	Signal common

2.8 VRS-LA6U System Bus Power Input Connections

The VPS-LA6U power supply module generates an unregulated, rectified, filtered bipolar +/- DC Bus voltage from a center-tapped input voltage. For any method of Bus voltage input, ensure the final DC Bus voltage does not exceed the rating of either the VPS-LA6U power supply module or any LA6U amplifier module used with the rack system. Damage to the system components will result from exceeding the maximum DC Bus voltage rating.

2.8.1 3-Phase AC Transformer Bus Input Connections

A 3-Phase AC input transformer is highly recommended to power the bus voltage rails of the LA6U series products. This method will result in the lowest bus voltage ripple and lowest radiated noise. Varedan has a range of 3-Phase transformers with multiple input and output taps which are perfect for evaluating a new system configurations. Contact a Varedan Applications Engineer for assistance with selecting a 3-Phase transformer.

The equation for sizing a 3-Phase AC transformer secondary voltage for a DC split supply is:

Vrms(Ph-Ph) = (B+)(1.224)

For example, the AC Secondary voltage for a +/-150VDC Bus would be:

150VDC * 1.224 = 183.6VACrms(Ph-Ph) secondary

Typical connections for a 3-Phase AC transformer; Primary and Secondary.

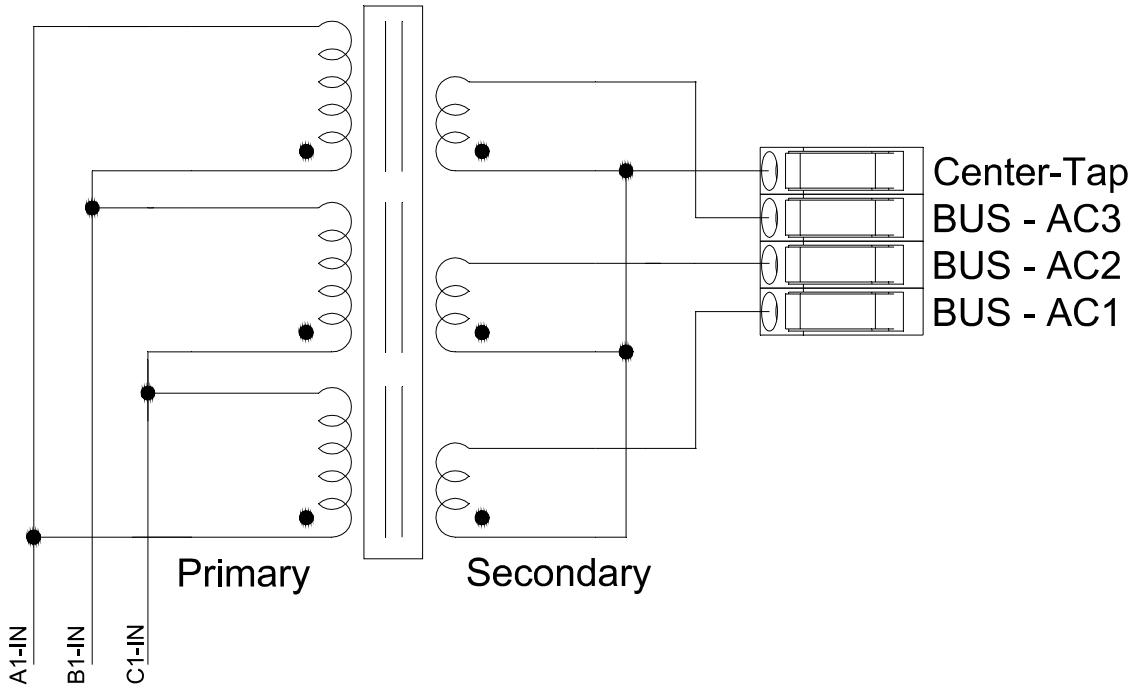

2.8.2 1-Phase AC Transformer Bus Input

A 1-Phase AC input transformer with a dual or center-tapped secondary can also be used for lower power systems. Increased Bus voltage ripple will result from the single phase input so the amount of Bus voltage overhead should be increased. Consult a Varedan Applications Engineer to determine if a 1-Phase transformer can be sufficient for your application.

1Phase AC Transformers are typically connected to the VRS-LA6U rack as shown below with AC3 unconnected.

Varedan has a range of 1-Phase transformers with multiple input and output taps which are perfect for evaluating a new system configurations.

Typical connections for a 1-Phase AC transformer; Primary and Secondary.

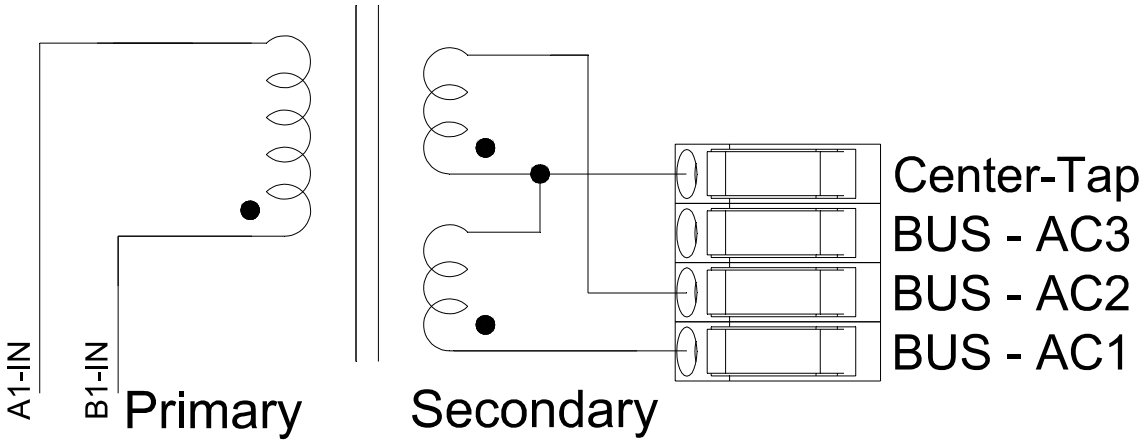

2.8.3 DC Supply Power Input

An additional option for powering the VRS-LA6U Bus voltage input would be a pair of AC-DC regulated switching power supplies with floating outputs connected in series as shown below. The center point of the series connected outputs is connected to the Center-Tap pin, and the + and – output DC voltage is connected to the BUS-AC2 and BUS-AC3 input. The internal circuitry of the VPS-LA6U power supply module will generate the correct polarity +/-DC bipolar Bus voltage for the VRS rack system.

Confirm with your the AC-DC power supply manufacturer that the selected supplies can be configured as shown and no damage will occur. The power supplies must also be capable of driving into a large capacitance, and be rated for the VRS-LA6U full system power demands.

NOTE:

Every switch mode power supply series will generate a different amount of switching noise, with some supplies being designed to have much lower noise than others. Such a configuration will need to be evaluated to determine if using a switching power supply will negate the advantage of the ultra-quiet linear amplifiers.

Typical connections for two AC-DC regulated switching power supplies with floating outputs.

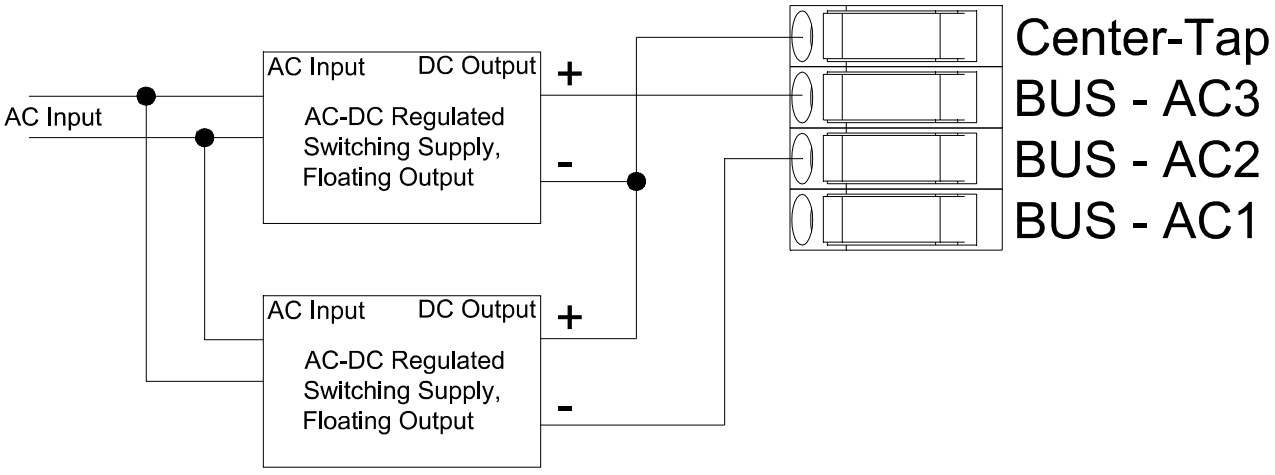

3 LA6U Series Linear Amplifier Modules

3.1 LA6U Amplifier Introduction

The LA6U series linear servo amplifier modules are the next generation of high-performance motion products from Varedan Technologies. They are the perfect choice for systems requiring low radiated noise with zero distortion. These current mode linear amplifiers are well suited to drive loads such as brushless and brush servo motors or voice coils.

Solving many of the problems found with PWM amplifiers, Varedan Linear amplifiers have a truly linear and extremely quiet ClassAB power stage that contributes very low distortion for ultra smooth motor operation in close proximity to sensitive sensors.

The LA6U amplifier design includes a high-speed DSP that monitors all key system functions in real time and provides protection for the output transistors by limiting power to a “Safe Operating Area”. An intelligent user interface allows setup and storage of all system parameters via the serial terminal. Non-volatile memory provides storage of the parameters during power off conditions and the 7-segment status display provides a real-time visual indication of system status.



LA6U Series Amplifier Module

3.2 LA6U Amplifier Features

- True Class AB linear power section for quiet operation and eliminating crossover distortion
- True rail to rail output
- Up to 10kHz+ of current Bandwidth
- Multiple power levels share common form factor and interface
- Three-Phase, Single-Phase & Independent mode versions (T,S,I)
    - Drive up to 3 independent Axis per amplifier module
- Real-Time DSP based safe operating area protection of power devices
- Over-Current protection
- Over-Voltage protection
- Over-Temperature protection
- Motor Temperature protection
- Opto-Isolated IO options
- USB and RS232 serial port for configuration and communication
- Real-Time 7-Segment status display
- Factory programmable options available
- Custom tuning for highest performance available
- Intelligent Amplifier – Backplane Communications Options

3.3 LA6U Amplifier Module Specifications

3.3.1 LA6U Amplifier Series Basic Overview

Amplifier Series	Parallel Transistor Rows	Peak Current	Peak Power	Continuous Current	Continuous Power	Maximum Bus Voltage
LA6U-400 Series	1	15 Amps	1200 Watts	5 Amps	400 Watts	+/-150 VDC
LA6U-500 Series	1	25 Amps	1500 Watts	10 Amps	500 Watts	+/-150 VDC
LA6U-500 Series	2	40 Amps	3000 Watts	20 Amps	500 Watts	+/-150 VDC

3.3.2 LA6U Amplifier Series Spec Breakdown

Parameter	LA6U-400 Series	LA6U-500 Series	
Parallel Transistor Rows	1	1	2
Peak Output Current (A)	15	25	40
Cont. Output Current (A)	5	10	20
Peak Output Power (25°C) W	1200	1500	3000
Continuous Power (25°C) W	400	500	500
Weight lbs.	4.6	5	5.5
Size - Length x Width x Height (inches)	11.025in x 9.19in x 2.77in		
Motor Bus Voltage	+/-12VDC to +/-150VDC		
Output Voltage to Motor	True Rail to Rail Output		
Heat Sink Temperature - Maximum	75C		
Current Loop Bandwidth - Maximum	Up to 10kHz 4 Hardware options (Contact Varedan for Custom Tuning)		
Transconductance Options	4 Hardware options (See model configuration sheet)		
Command Input Filter	4 Hardware options (See model configuration sheet)		
Motor Configuration Modes	T-Mode, S-Mode, I-Mode		
Operational Modes	2-Phase Sine Input (3Phase Motor), 1-Phase Sine Input, 3 Independent Phases Sine Input (I-Mode Only), Trap Mode Commutation from Halls, For Voltage control mode contact Varedan Engineering		
Command Signal - Analog	+/-10V or +/-20V (Single Ended or Differential)		
I/O Configuration	Fully Opto-Isolated, Internal Pull-Up, Internal Pull-Down, 0-5V		
Motor Temperature Sensor Input	PTC or NTC		
Serial Port Interface	USB or DB9 RS232		
Analog Current Monitors (Full Bandwidth, Bipolar)	Phase A, Phase B, Phase C		
Motor Phase Voltage Balance	Both Manual Pots, and DSP Controlled Autobalance		

3.4 LA6U Amplifier Motor Configuration Operational Modes

The LA6U Linear Amplifiers are available in the following standard motor configurations:

“T-Mode” – Three-phase type output. This configuration is used for driving one three phase rotary or linear motor in a Full-Bridge output configuration. The amplifier receives two analog current commands for phases A & B. The phase C command is generated internally in the amplifier.

“S-Mode” – Single-phase H-Bridge type output. This configuration is used for driving single phase loads such as brush-type motors or voice coils. In this mode the amplifier can deliver the full rail-to-rail bipolar bus voltage to one single-phase load.

“I-Mode” – Three independent Half-Bridge type outputs. This mode is used to drive three independent single phase loads with one amplifier module. Three brush-type motors or voice coils can be driven in Half-Bridge configuration. Each load has an independent command input.

3.5 LA6U Amplifier Model Numbering

Characters in **RED (X,Z)** are configuration fields.

Field Number		1	2	3	4		5	6
LA6U	-	**X**	**XX**	**X**	**X**	-	**XX**	**_ZZZ**

Part Number Break Down by Field Number:

Field Number	Description	Present Options	Notes
LA6U	6U Linear Amplifier Series		Product Series,
1	Max continuous power dissipation	4 = 400W 5 = 500W	Required,
2	Peak current level	10=10Amp 15=15Amp 25=25Amp 40=40Amp*	Required, *40A only available if Field 4 = “2”.
3	Operational motor configuration mode (Factory Configured)	T = Three-Phase S = Single-Phase I = Independent Coils	Required,
4	Number of Parallel Output Transistors	1 = One Row 2 = Two Rows	Required,
5	Unique hardware configuration code	Contact Varedan Engineering	Required, See Note1 below
6	Unique _CustomerConfigCode	Contact Varedan Engineering	Optional, See Note2 below

Characters in **RED (X,Z)** are configuration fields.

Field Number		1	2	3	4		5	6
LA6U	-	X	XX	X	X	-	XX	_ZZZ

A valid LA6U Series amplifier part number will include at a minimum fields 1-5 noted above with the “X” character and a fully configured part number will also include the optional _CustomerConfigCode field 6 noted as “_ZZZ”. Such a number will define the amplifier configuration at the time of shipping from the factory. If no _CustomerConfigCode is given on a purchase order the amplifier will ship with default software settings, fully opto-isolated IO jumper settings, and the current firmware version. All _CustomerConfigCode settings can be applied by the customer at install time. Contact Varedan Sales for details.

The unique hardware configuration code (field 5) and _CustomerConfigCode (field 6) are assigned by the Varedan Applications Engineering team based on specific customer application requirements. These fields are incremental and the digits themselves have no inherent significance.

While general product series numbers are sometimes used for budgetary pricing such as “LA6U-525T1 Series”, only valid complete part numbers should be used on Purchase Orders. If changes are made to a system during the engineering process, the final assigned valid part number should be updated in all systems and used on future orders. This will help ensure product orders are accurate and complete and minimize production delays associated with confirming valid part numbers based on customer requirements.

Note1: The unique hardware configuration code defines the mechanical and electrical properties of the amplifier module. Any change to the tuning component values on the circuit board or mechanical aspects of the assembly will require the creation of a new hardware configuration code.

Note2: The unique _CustomerConfigCode, separated by the underscore “_” character, represents a set of specific Firmware version, Software settings, and/or Physical configuration such as jumpers to be applied at production time based on customer requirements. This application specific unique number will be assigned by the Varedan Applications Engineering Team and must be included on all purchase orders to receive fully factory configured product. Once a _CustomerConfigCode is assigned, that configuration is locked and no further changes will be made to that configuration unless expressly directed by the customer. If no _CustomerConfigCode is given, the amplifiers will ship in the default configuration and must be configured by the customer.

3.6 "Standard" Amplifier Model Configuration Options

The amplifier models listed here have been configured to cover a wide range of applications. If specific application requirements are not covered by these models, contact Varedan engineering for alternate configurations.

3.6.1 LA6U-525I1-01 Configuration Options

Amplifier Model Number	LA6U-525I1-001	Notes
Motor Configuration Mode	I-Mode	
Firmware Version	Current Release	1
IO: Opto-Input Jumpers Installed	JP5D	2
IO: Opto-Output Jumpers Installed	JP4A	2

Hardware Configuration:

Parameter	Value	Notes
Maximum Bus Voltage	+/-150V	
Maximum Current	25A	
Analog Current Monitor Scale Factor	0.2V/A	
Input Filter: 1	(A,B,C) = 500 Hz	3
Input Filter: 2	(A,B,C) = 700 Hz	3
Input Filter: 3	(A,B,C) = 15000 Hz	3
Input Filter: 4	(A,B,C) = 32000 Hz	3
Transconductance: 1	(A,B,C) = 1.0 A/V	4
Transconductance: 2	(A,B,C) = 1.5 A/V	4
Transconductance: 3	(A,B,C) = 2.0 A/V	4
Transconductance: 4	(A,B,C) = 2.5 A/V	4

Current Loop Bandwidth	Bandwidth Formula Lm = phase to phase motor inductance (mH)	Minimum Ph-Ph Inductance	Notes
Current Bandwidth: 1	(A,B,C) = 2500 / Lm	0.25mH	5,6,7
Current Bandwidth: 2	(A,B,C) = 7000 / Lm	0.7mH	5,6,7
Current Bandwidth: 3	(A,B,C) = 23000 / Lm	2.3mH	5,6,7
Current Bandwidth: 4	(A,B,C) = 55000 / Lm	5.5mH	5,6,7

Notes:

1 Contact Varedan engineering if _CustomerConfigCode is required.

2 Factory Installed Jumpers. User can change jumpers in the field.

3 All phases (A,B,C) have identical values.
Use commands ABFILTER:x , CFILTER:x to set the input filter.

4 All phases (A,B,C) have identical values.
Use commands ABTRANS:x , CTRANS:x to set the transconductance

5 All phases (A,B,C) have identical values.
Use commands ABBANDWIDTH:x , CBANDWIDTH:x to set current loop bandwidth.

6 Calculated current loop bandwidth is determined using phase-phase inductance following the given formula. For example, Option1 with a 1mH ph-ph motor inductance would result in an approximate current loop bandwidth of 2.5kHz.

7 Minimum inductance is required to ensure amplifier stability. Using lower inductance value than specified may cause damage to the amplifier and void warranty.

3.6.2 LA6U-525T1-01 Configuration Options

Amplifier Model Number	LA6U-525T1-01	Notes
Motor Configuration Mode	T-Mode	
Firmware Version	Current Release	1
IO: Opto-Input Jumpers Installed	JP5D	2
IO: Opto-Output Jumpers Installed	JP4A	2

Hardware Configuration:

Parameter	Value	Notes
Maximum Bus Voltage	+/-150V	
Maximum Current	25A	
Analog Current Monitor Scale Factor	0.2V/A	
Input Filter: 1	(A,B,C) = 500 Hz	3
Input Filter: 2	(A,B,C) = 700 Hz	3
Input Filter: 3	(A,B,C) = 15000 Hz	3
Input Filter: 4	(A,B,C) = 32000 Hz	3
Transconductance: 1	(A,B,C) = 1.0 A/V	4
Transconductance: 2	(A,B,C) = 1.5 A/V	4
Transconductance: 3	(A,B,C) = 2.0 A/V	4
Transconductance: 4	(A,B,C) = 2.5 A/V	4

Current Loop Bandwidth	Bandwidth Formula Lm = phase to phase motor inductance (mH)	Minimum Ph-Ph Inductance	Notes
Current Bandwidth: 1	(A,B,C) = 4500 / Lm	0.45mH	5,6,7
Current Bandwidth: 2	(A,B,C) = 14000 / Lm	1.4mH	5,6,7
Current Bandwidth: 3	(A,B,C) = 40000 / Lm	4.0mH	5,6,7
Current Bandwidth: 4	(A,B,C) = 110000 / Lm	11mH	5,6,7

Notes:

1 Contact Varedan engineering if _CustomerConfigCode is required.

2 Factory Installed Jumpers. User can change jumpers in the field.

3 All phases (A,B,C) have identical values.
Use commands ABFILTER:x to set the input filter.

4 All phases (A,B,C) have identical values.
Use commands ABTRANS:x to set the transconductance

5 All phases (A,B,C) have identical values.
Use commands ABBANDWIDTH:x to set current loop bandwidth.

6 Calculated current loop bandwidth is determined using phase-phase inductance following the given formula. For example, Option1 with a 1mH ph-ph motor inductance would result in an approximate current loop bandwidth of 4.5kHz.

7 Minimum inductance is required to ensure amplifier stability. Using lower inductance value than specified may cause damage to the amplifier and void warranty.

3.7 LA6U Amplifier Protection Features

Along with high quality performance, reliability and robustness are primary features in all Varedan amplifiers. The LA6U series of Linear Amplifier have the following protection features:

- Real Time SOA Over-Power Protection - (See detail below)
- Absolute Over-current – Set if an instantaneous over-current condition is detected
- Continuous Over-current – Set if a continuous over-current condition is detected
- Bus Over Voltage – Set if the Bus voltage exceeds maximum threshold
- Bus Under Voltage – Set if the Bus voltage is less than the minimum threshold
- System Over Temperature – Set if the amplifier heat sink temperature exceeds the set threshold
- Motor Over Temperature – Set if the motor temperature sensor signals a fault condition
- Hall Error – Set when an invalid hall sequence is detected
- System Voltage Monitoring – Set if the system voltages (+5V, +/-15V, +3.3V) are out of range

3.7.1 LA6U Amplifier Safe Operating Area (SOA) Over Power Protection

The LA6U amplifiers include a sophisticated algorithm that protects the outputs from over power conditions. This algorithm is matched to the power characteristics of the output transistors in each amplifier model. With linear servo amplifiers (as opposed to PWM amplifiers), it is very important to provide over-power protection, rather than simple over-current protection, due to the linear nature of the output control. In the case of PWM amplifiers, only over-current protection is required since the outputs are typically operating in saturation mode or “full on mode”. This mode provides very little voltage drop across the output transistors, so simple current monitoring is typically sufficient to provide protection of the output transistors.

With linear servo amplifiers, the outputs are operating in their linear region, so the voltage across the output transistors can be a substantial contribution to the total power dissipated by the device. To properly protect the amplifier from damage, the amplifier must provide protection by monitoring the power (voltage * current) in each output devices. To put this in perspective, the transistors used in our LA6U-400 Series (5A continuous, 15A peak) can handle 60A under the proper conditions! It’s the power that has to be kept under control.

The DSP in the LA6U series amplifiers monitors the power of each output device in real time. The instantaneous power calculation is compared with the transistor manufactures recommended “safe operating area” curve stored in the DSP memory and the device temperature is used for long term thermal monitoring and protection. The amplifier is shut down in the event the measured power exceeds the recommended ratings of the output devices.

With years of run time in the most demanding applications, the Varedan SOA algorithm has proven to be extremely effective in protecting our linear amplifiers from damage due to over power conditions. While developing a new system, be aware that what may appear to be “nuisance” tripping of the SOA protective function may have very well have destroyed an amplifier without this important feature.

3.8 LA6U Amplifier Front Panel

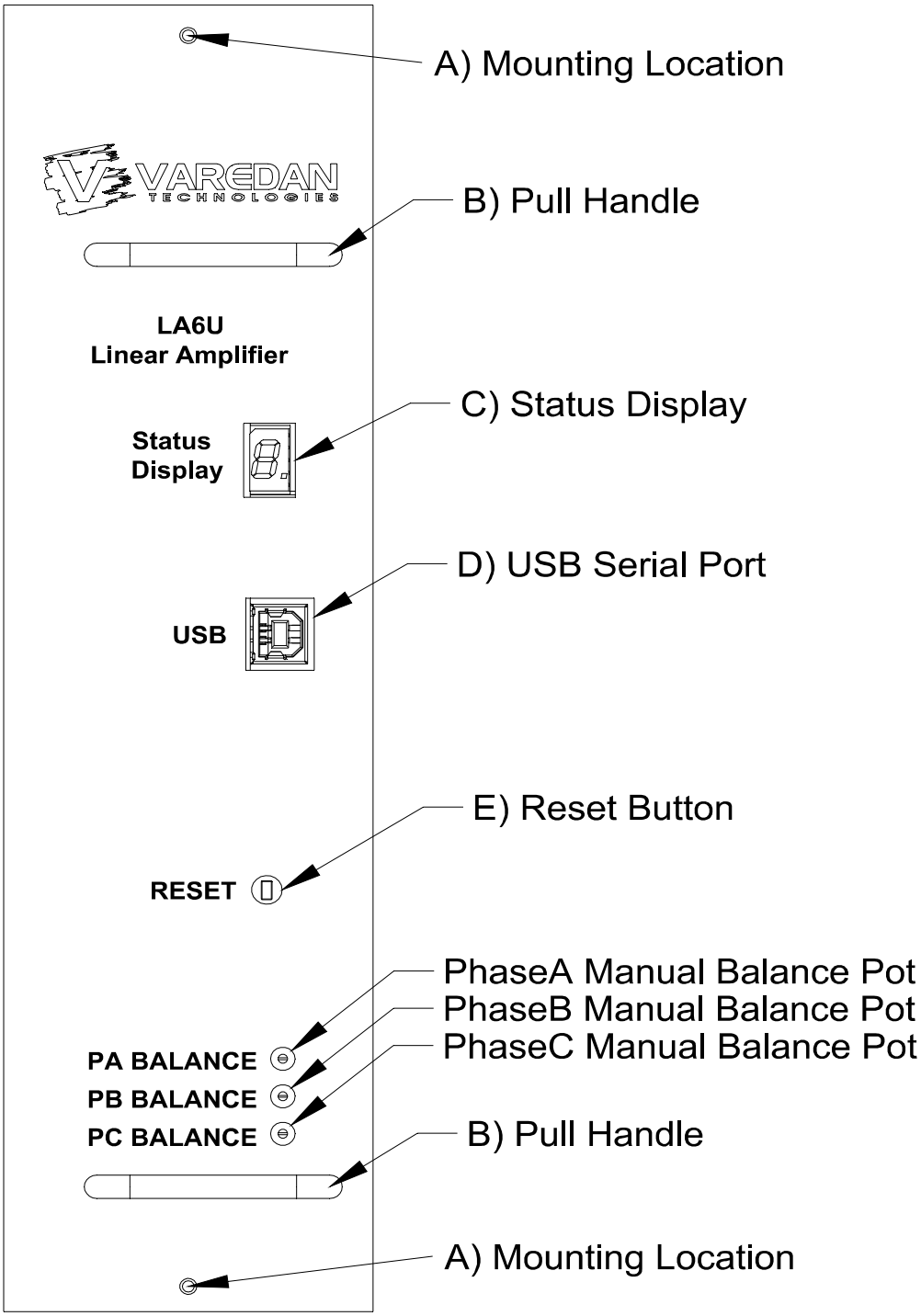

3.9 LA6U Amplifier Motor Configurations

The T-Mode, S-Mode, and I-Mode options are factory configurations and cannot be changed in the field. Contact Varedan Engineering for upgrade options.

3.9.1 Motor Case/Shield Connection Point

A common question when configuring a Linear Amplifier system is, “Where is the best place to connect the motor case or shield wire to minimize noise in the system?”.

The best answer is: It depends.

Every system is different and we have seen systems where each of the following options has resulted in the lowest noise. The best course of action would be to evaluate each of the following options and determine which works best in your particular system. The options are:

1) Leave the motor case/shield unconnected

2) Connect the motor case/shield to the Power Common terminal of the motor connector (Pin 4)

3) Connect the motor case/shield to the Chassis Earth terminal of the motor connector (Pin 5)

3.9.2 LA6U Amplifier T-Mode Motor Connections

In T-Mode, one three phase motor (linear or rotary) is connected to the amplifier module using Phases A, B, and C as shown below.

This motor configuration is a Full H-Bridge configuration and the maximum voltage capable of being delivered to the motor is the full B+ to B- voltage.

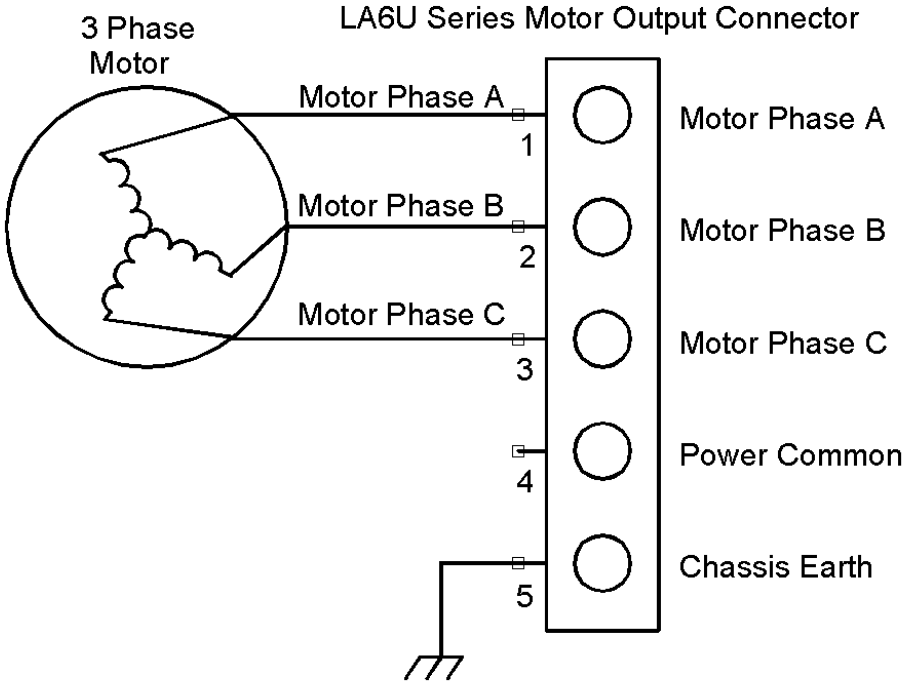

3.9.3 LA6U Amplifier S-Mode Motor Connections

In S-Mode, one single phase motor (brush type, voice coil, galvanometer, etc) is connected to the amplifier module using Phases B, and C as shown below. Phase A is left unconnected. The PhaseB command signal input is used to drive this configuration.

This motor configuration is a Full H-Bridge configuration and the maximum voltage capable of being delivered to the load is the full B+ to B- voltage.

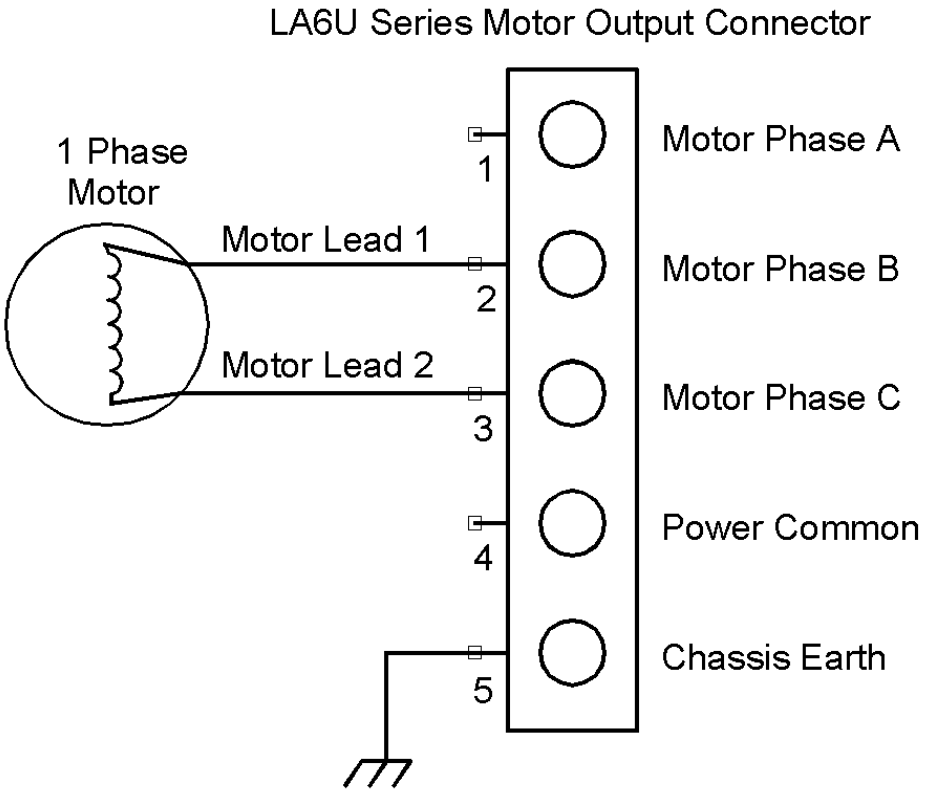

3.9.4 LA6U Amplifier I-Mode Motor Connections

In I-Mode, three independent single phase motors (brush type, voice coil, galvanometer, etc) are connected to the amplifier phases independently from PhaseA-Common, PhaseB-Common, and PhaseC-Common. All three Common side connections go to the single Motor Output Connector Pin-4.

The PhaseA command input drives the load connected to PhaseA, the PhaseB command input drives the load connected to PhaseB, and the PhaseC command input drives the load connected to PhaseC.

This motor configuration drives each load independently in a Half-Bridge type output configuration. In this configuration the maximum Bus voltage applied to the load is B+ to common, or B- to common, or one half the total B+ to B- bipolar voltage.

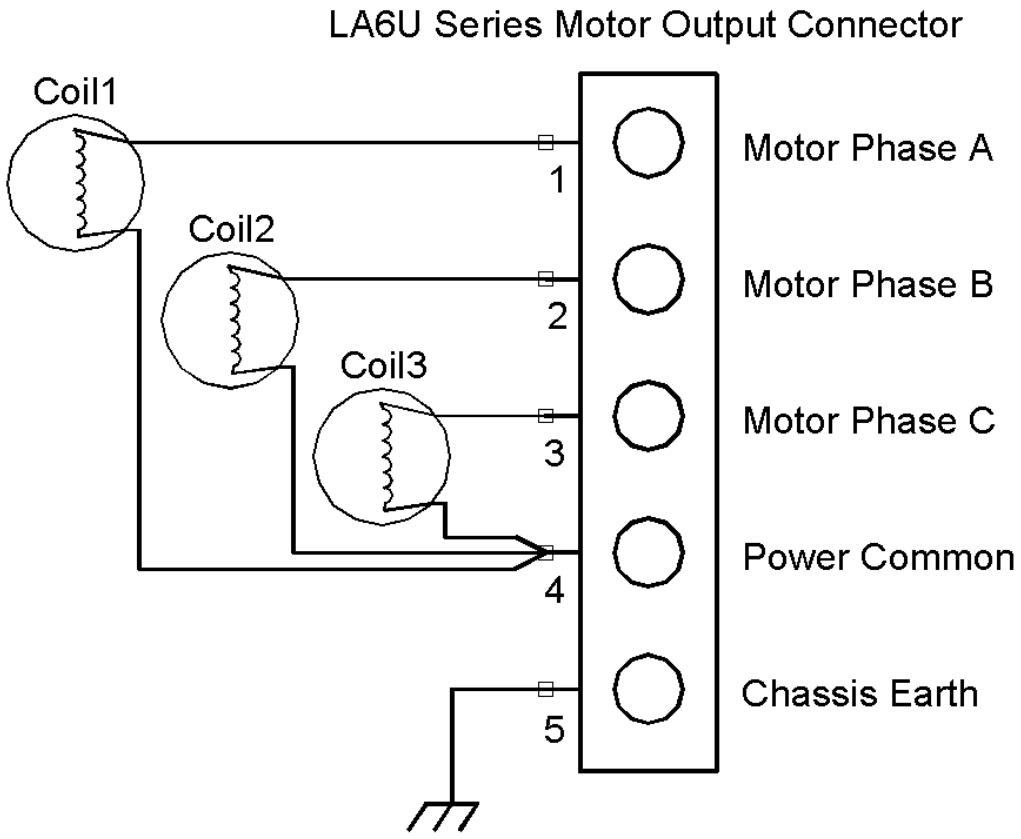

3.10 LA6U Amplifier Command Input

Each motor phase command input circuit is fully differential with a 20KOhm input impedance. PhaseC command input is only active in the I-Mode configuration.

The differential command input circuit for each phase is shown here:

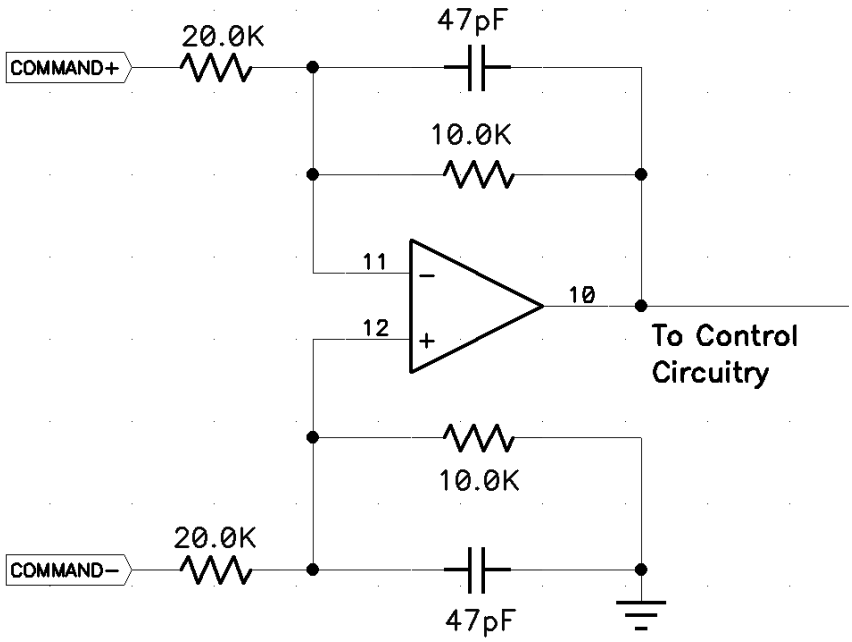

3.11 LA6U Amplifier Current Monitor Output

Each output phase on the LA6U series amplifiers has an analog, full bandwidth, bipolar current monitor. This signal is inverted from the actual motor current by the buffer stage. The current monitor output scale factor depends on the peak current rating of the amplifier. See the amplifier configuration sheet for the correct current monitor scale factor for each model. Contact Varedan Engineering for customer scale factor requests.

3.12 LA6U Amplifier Physical Configuration Jumpers

To be compatible with the widest variety of controller interfaces, the LA6U series amplifiers have an extremely flexible set of configuration options for the digital input and output circuits. The four input circuits use bi-directional opto-isolators with pull-up or pull-down configurations. The output opto-isolators can be configured as either open-collector or logic level with an external or internal pull-up.

Standard model amplifiers without a _CustomerConfigCode are shipped in the fully Opto-Isolated configuration.

After removing the LA6U amplifier card from the enclosure, the IO jumper headers JP4, JP5, and JP7 will be located in the bottom right section of the board.

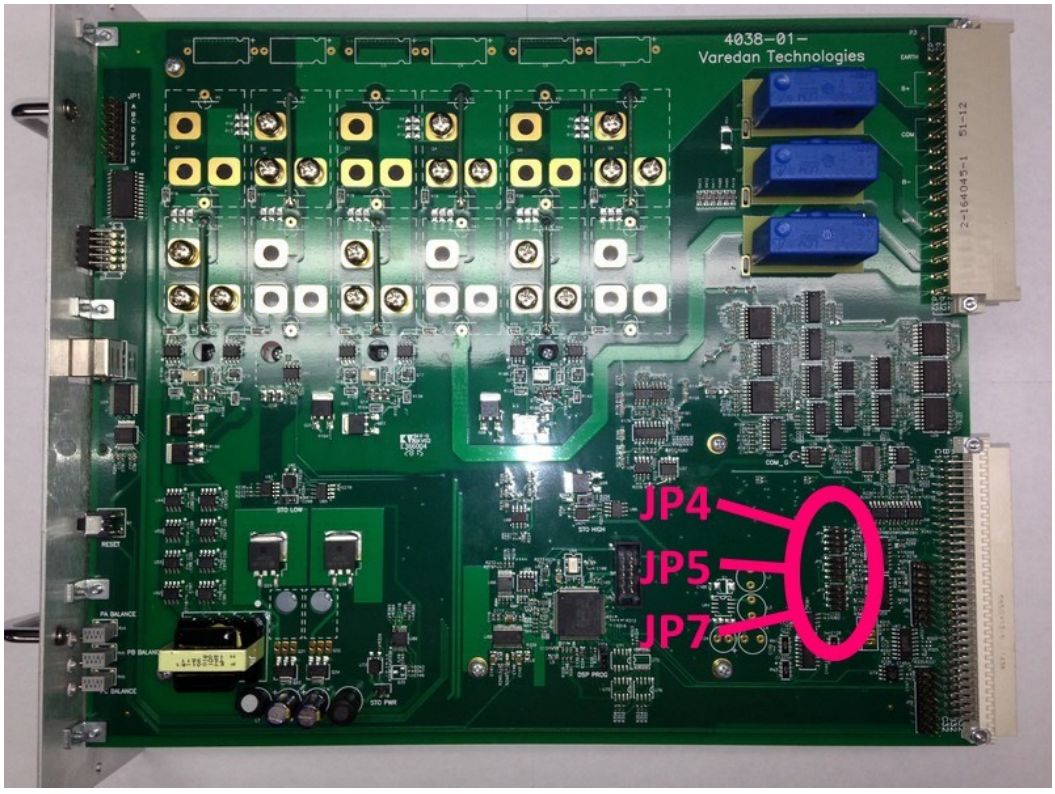

LA6U Amplifier Module

3.12.1 Digital I/O Inputs

The following amplifier digital IO inputs have configurable circuits with Opto-Isolated options:

- Enable
- Reset
- User-Input-1
- User-Input-2

The Enable circuit is shown for example. All signals listed here have similar circuits and share "Input_Opto_Config_Net":

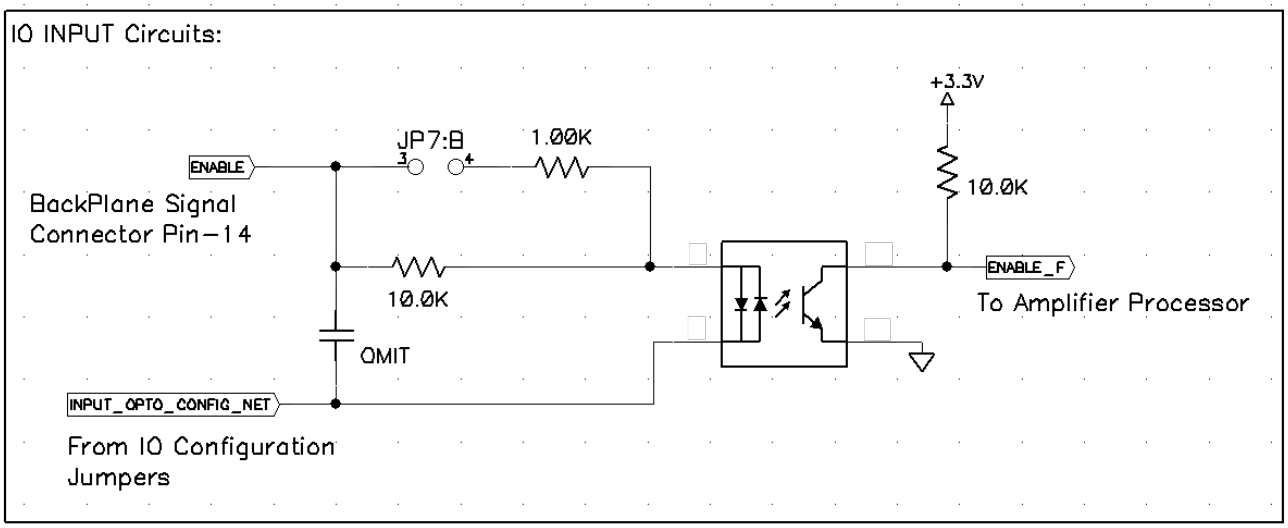

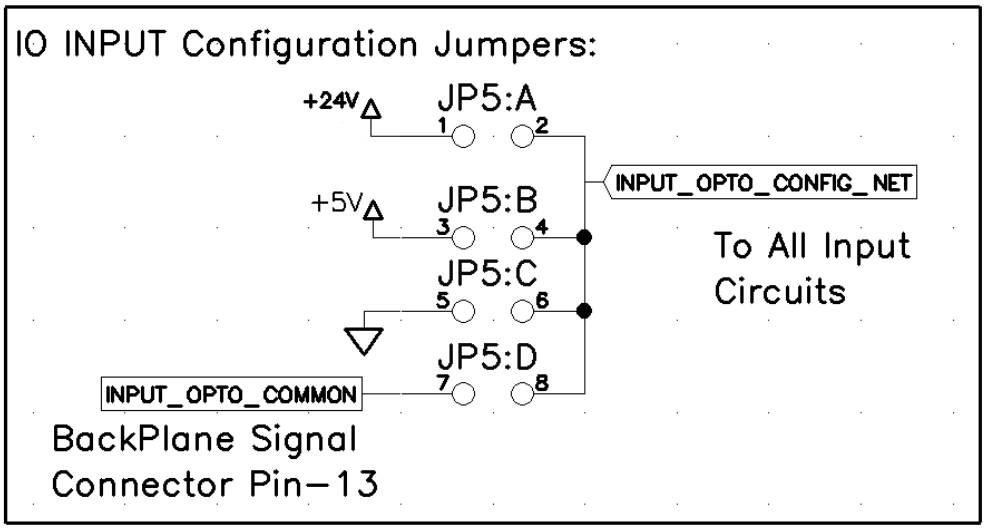

JP5 is the digital input configuration jumper header:

****WARNING****

Only one jumper should ever be installed on JP5. Installing more than one jumper on JP5 could cause damage to the amplifier.

The digital input circuits can be jumpered in the following configurations:

Config Number	Configuration Description	Installed Jumper	Notes
1	Internal Pull-Up to +24V	JP5A	To use: pull input pin to system common
2	Internal Pull-Up to +5V	JP5B	To use: pull input pin to system common
3	Internal Pull-Down to System Common	JP5C	To use: pull input pin to +5V or +24V
4	Fully Opto-Isolated	JP5D	To use: Apply external voltage from input pin to “Input_Opto_Common” on backplane signal connector Pin-13.

Note: If input voltages lower than 5V are used, JP7 A,B,C,D must be installed.

Note: The internal +24VDC and +5VDC are sourced from the backplane. These voltages need to be present on the backplane to use these options.

3.12.2 Digital I/O Outputs

The following amplifier digital IO outputs have configurable circuits with Opto-Isolated options:

- Fault
- User-Output-1
- User-Output-2

The Fault Output circuit is shown for example. All signals listed here have similar circuits and share "Output_Opto_Common". Maximum Opto-Isolator collector current = 50mA:

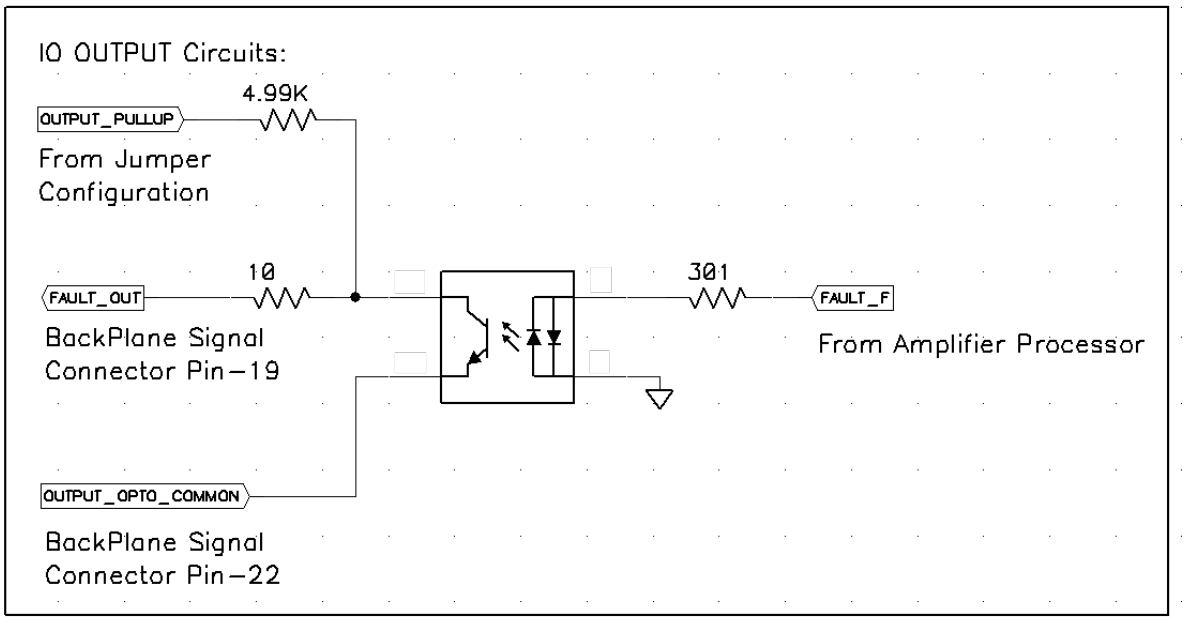

JP4 is the digital output configuration jumper header:

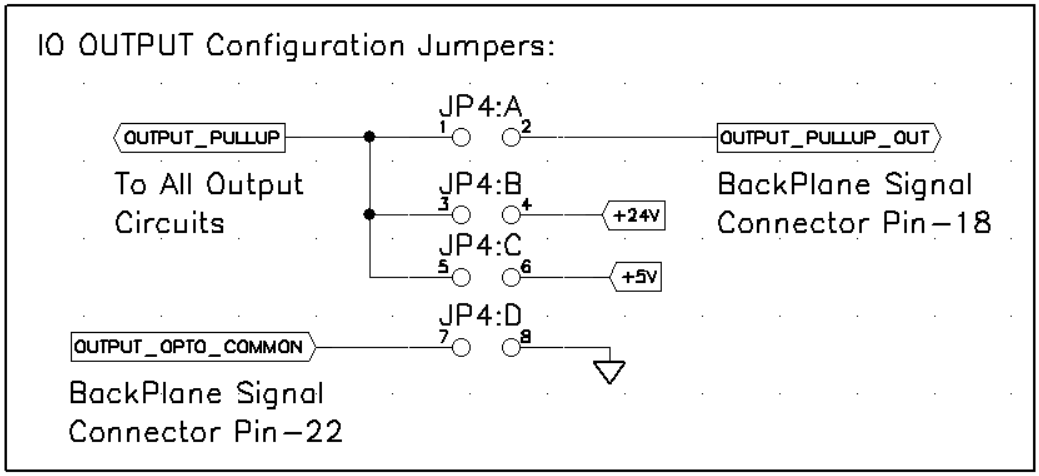

****Warning****

Only the valid jumper configurations shown in the table below can be used. Invalid combinations can cause damage to the amplifier

The digital output circuits can be jumpered in the following configurations:

Config Number	Configuration Description	Installed Jumpers	Notes
1	Fully Opto-Isolated, Open Collector	No Jumpers Installed	To use: Connect external circuit from output signal pin to “Output_Opto_Common”.
2	Fully Opto-Isolated, External Pull-Up	JP4A	To use: Connect external voltage from “Output_Pullup_Out” to “Output_Opto_Common”. Sense output signal pin.
3	Internal Common Open Collector	JP4D	To use: Connect external circuit from output signal pin to “Output_Opto_Common”.
4	Internal Logic Level with +5V Pull-Up	JP4D, JP4C	To use: Sense output signal pin.
5	Internal Logic Level with +24V Pull-Up	JP4D, JP4B	To use: Sense output signal pin.

Note: The internal +24VDC and +5VDC are sourced from the backplane. These voltages need to be present on the backplane to use these options.

3.13 LA6U Amplifier Software Configuration using USB or RS232 serial port

3.13.1 PC Based Terminal Options

Many terminal programs can be used to communicate with the LA6U series amplifiers over the serial port. We recommend the use of the freely available Open Source TeraTerm. All examples in this manual will be using TeraTerm.
TeraTerm can be downloaded from the following link:
https://ttssh2.osdn.jp/

3.13.2 Serial Port Software Configuration

The COM port settings for the LA6U amplifiers are:

Baud Rate = 38400
Data = 8bit
Parity = none
Stop = 1bit
Flow Control = none
If using TeraTerm, we recommend a transmit delay of 20ms/char and 20ms/line while sending configuration files. Substitute your active COM port in the setup information shown.

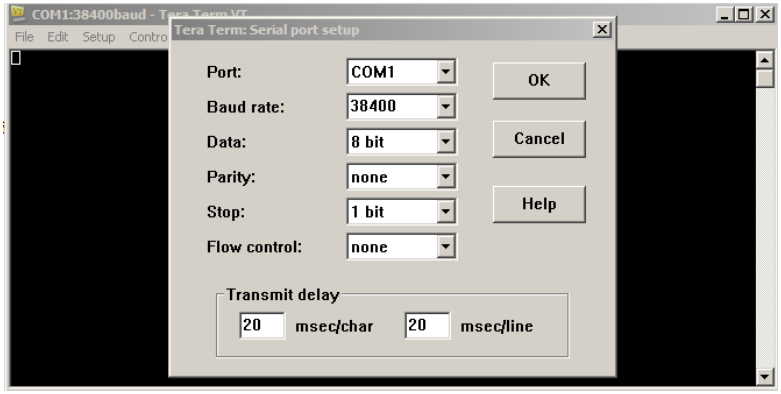

3.13.3 Front Panel USB Virtual COM Port Drivers

The front panel USB port uses an FTDI USB-Serial converter. To use the front panel USB port to communicate with the LA6U amplifier on older versions of windows or machines not connected to the internet, the VCP drivers may need to be manually installed. The drivers can be downloaded direct from FTDI at the following link:

http://www.ftdichip.com/Drivers/VCP.htm

3.13.4 LA6U Amplifier Software Command List

The following commands are supported over the serial port communications USB or RS232 interface. All commands entries are terminated with a carriage return character <Cr> (<Enter> on most keyboards). Commands are not case sensitive. For commands with a data field, the data is entered after a ":" followed by the numerical data. Command format is described for each command in the following tables.

Definitions of command attributes

Command Format: This is the required syntax for issuing a command in the serial terminal.

Command Type: Configuration = modify/save configuration parameters.
Action = modify real-time control parameters and actions.
Display = list operating and configuration parameters in the serial terminal.

Value Type: For commands with a value field, the value will be of type Integer, Floating Point, or Character. These values relate to either a unit or system as noted.

Range: For commands with a value field, this is the upper and lower range for that value. Issuing a command with a value outside of the limits will cause the command to be invalid.

Default Value: For commands with a value field, this is the factory default value.

Active Mode: Some commands are active only in specific operating modes. Those modes are stated where applicable.

Restrictions: Some commands cannot be executed under certain conditions. Those restrictions are stated where applicable.

Functional Description: This section describes the action of the command and intended use.

ABBANDWIDTH	Parameters
Command Format	ABBANDWIDTH:[value]
Command Type	Configuration
Value Type	Integer, Representing analog switch setting
Range	1-4
Default Value	1
Active Mode	All
Restrictions	None
Functional Description	This command sets the Phase A and Phase B current loop bandwidth. See amplifier configuration information for hardware values. A WRITE command saves this value to the nonvolatile EEPROM memory.

ABFILTER	Parameters
Command Format	ABFILTER:[value]
Command Type	Configuration
Value Type	Integer, Representing analog switch setting
Range	1-4
Default Value	4
Active Mode	All
Restrictions	None
Functional Description	This command sets the Phase A and Phase B command signal RC filter bandwidth. See amplifier configuration information for hardware values. A WRITE command saves this value to the nonvolatile EEPROM memory.

ABSLEVEL	Parameters
Command Format	ABSLEVEL:[value]
Command Type	Configuration
Value Type	Floating Point, Representing Amps
Range	0 - Peak Current Rating
Default Value	Peak Current Rating
Active Mode	All
Restrictions	None
Functional Description	This command sets the Absolute Over-current Trip threshold in Amps that must be exceeded to set a fault. The Peak Current Rating depends on the model amplifier being used. A WRITE command saves this value to the nonvolatile EEPROM memory.

ABTRANS	Parameters
Command Format	ABTRANS:[value]
Command Type	Configuration
Value Type	Integer, Representing analog switch setting
Range	1-4
Default Value	1
Active Mode	All
Restrictions	None
Functional Description	This command sets the Phase A/B command signal transconductance. See amplifier configuration information for hardware values. A WRITE command saves this value to the nonvolatile EEPROM memory.

ALARMRESET	Parameters
Command Format	ALARMRESET
Command Type	Action
Value Type	None
Range	None
Default Value	None
Active Mode	All
Restrictions	None
Functional Description	This command clears all fault status flags. Any active fault condition(s) will re-set the fault flag(s) after this command is executed.

CBANDWIDTH	Parameters
Command Format	CBANDWIDTH:[value]
Command Type	Configuration
Value Type	Integer, Representing analog switch setting
Range	1-4
Default Value	1
Active Mode	I-Mode Only
Restrictions	None
Functional Description	This command sets the Phase C current loop bandwidth. See amplifier configuration information for hardware values. A WRITE command saves this value to the nonvolatile EEPROM memory.

CFILTER	Parameters
Command Format	CFILTER:[value]
Command Type	Configuration
Value Type	Integer, Representing analog switch setting
Range	1-4
Default Value	4
Active Mode	I-Mode Only
Restrictions	None
Functional Description	This command sets the Phase C command signal RC filter bandwidth. See amplifier configuration information for hardware values. A WRITE command saves this value to the nonvolatile EEPROM memory.

CMDRANGE	Parameters
Command Format	CMDRANGE:[value]
Command Type	Configuration
Value Type	Character, Representing voltage range
Range	'H','L'
Default Value	'L'
Active Mode	All
Restrictions	None
Functional Description	This command sets the analog command front end voltage range. CMDRANGE:L = +/-10V input signal CMDRANGE:H = +/-20V input signal A WRITE command saves this value to the nonvolatile EEPROM memory.

CTRANS	Parameters
Command Format	CTRANS:[value]
Command Type	Configuration
Value Type	Integer, Representing analog switch setting
Range	1-4
Default Value	1
Active Mode	I-Mode Only
Restrictions	None
Functional Description	This command sets the Phase C command signal transconductance. See amplifier configuration information for hardware values. A WRITE command saves this value to the nonvolatile EEPROM memory.

DISABLE	Parameters
Command Format	DISABLE
Command Type	Action
Value Type	None
Range	None
Default Value	None
Active Mode	All
Restrictions	Enable source must be set to internal software control; EXTENABLE:0
Functional Description	This command clamps the power section and current loops and disables the amplifier.

ENABLE	Parameters
Command Format	ENABLE
Command Type	Action
Value Type	None
Range	None
Default Value	None
Active Mode	All
Restrictions	1. External Enable must be set to internal software control; EXTENABLE:0 2. All fault flags must be cleared for the command to proceed.
Functional Description	This command un-clamps the power section and enables the amplifier for normal operation.

ENABLED	Parameters
Command Format	ENABLED?
Command Type	Display
Value Type	None
Range	None
Default Value	None
Active Mode	All
Restrictions	None
Functional Description	This command returns the enable status of the amp.

ENABLELEVEL	Parameters
Command Format	ENABLELEVEL:[value]
Command Type	Configuration
Value Type	Integer, Representing enable signal polarity
Range	0,1
Default Value	1
Active Mode	Enable source set to external I/O; EXTENABLE:1
Restrictions	None
Functional Description	This command sets the enable input level. ENABLELEVEL:1 = Logic HI on the external enable pin ENABLES the amp. ENABLELEVEL:0 = Logic LO on the external enable pin ENABLES the amp. A WRITE command saves this value to the nonvolatile EEPROM memory.

EXTENABLE	Parameters
Command Format	EXTENABLE:[value]
Command Type	Configuration
Value Type	Integer, Representing enable source
Range	0,1
Default Value	1
Active Mode	All
Restrictions	Amplifier must be disabled.
Functional Description	This command sets the enable source. Used in conjunction with ENABLELEVEL. EXTENABLE:0 = Use software command EXTENABLE:1 = Use external hardware IO signal. A WRITE command saves this value to the nonvolatile EEPROM memory.

FAULTLEVEL	Parameters
Command Format	FAULTLEVEL:[value]
Command Type	Configuration
Value Type	Integer, Representing fault polarity
Range	0,1
Default Value	0
Active Mode	All
Restrictions	None
Functional Description	This command sets the active Hi/Lo level for the fault output. FAULTLEVEL:0 = Active Lo fault output. FAULTLEVEL:1 = Active Hi fault output. A WRITE command saves this value to the nonvolatile EEPROM memory.

FAULTS	Parameters
Command Format	FAULTS?
Command Type	Display
Value Type	None
Range	None
Default Value	None
Active Mode	All
Restrictions	None
Functional Description	This command displays all present faults in the serial terminal interface.

HELP	Parameters
Command Format	HELP
Command Type	Display
Value Type	None
Range	None
Default Value	None
Active Mode	All
Restrictions	None
Functional Description	This command lists all of the available user commands.

I	Parameters
Command Format	I?
Command Type	Display
Value Type	None
Range	None
Default Value	None
Active Mode	All
Restrictions	None
Functional Description	This command lists all 3 phase current displayed in amps.

LIST	Parameters
Command Format	LIST
Command Type	Display
Value Type	None
Range	None
Default Value	None
Active Mode	All
Restrictions	None
Functional Description	This command lists firmware version, measured data such as current/voltage/temperature data, and user programmable settings.

OTLEVEL	Parameters
Command Format	OTLEVEL:[value]
Command Type	Configuration
Value Type	Integer, Representing Degrees Celsius
Range	25-75
Default Value	70
Active Mode	All
Restrictions	None
Functional Description	This command sets the heatsink over-temperature trip threshold in degrees-C that must be exceeded to set a fault. A WRITE command saves this value to the nonvolatile EEPROM memory.

RESET	Parameters
Command Format	RESET
Command Type	Action
Value Type	None
Range	None
Default Value	None
Active Mode	All
Restrictions	None
Functional Description	This command generates a power-on reset signal and reboots the amplifier. Any software configuration values that were modified but not saved to the nonvolatile EEPROM memory will be overwritten.

RMSLEVEL	Parameters
Command Format	RMSLEVEL:[value]
Command Type	Configuration
Value Type	Floating Point, Representing current in Amps
Range	1.0-25.0
Default Value	10.0
Active Mode	All
Restrictions	None
Functional Description	This command sets the continuous current limit threshold in amps that must be exceeded to set a fault. For a fault condition to exist, the current must exceed the RMSLEVEL for the RMSTIME. Used in conjunction with RMSTIME. A WRITE command saves this value to the nonvolatile EEPROM memory.

RMSTIME	Parameters
Command Format	RMSTIME:[value]
Command Type	Configuration
Value Type	Floating Point, Representing time in seconds
Range	0.1-25.0
Default Value	10.0
Active Mode	All
Restrictions	None
Functional Description	This command sets the continuous current limit duration in seconds that must be exceeded to set a fault. For a fault condition to exist, the current must exceed the RMSLEVEL for the RMSTIME. Used in conjunction with RMSLEVEL. A WRITE command saves this value to the nonvolatile EEPROM memory.

SHOWTRIP	Parameters
Command Format	SHOWTRIP
Command Type	Display
Value Type	None
Range	None
Default Value	None
Active Mode	All
Restrictions	None
Functional Description	This command lists the saved data from the previous SOA trip event. Data includes phase currents/voltages, instantaneous power, trip threshold, heatsink temperature, and bus voltage.

STMODE	Parameters
Command Format	STMODE:[value]
Command Type	Configuration
Value Type	Character, Representing commutation mode
Range	'S','T'
Default Value	'S'
Active Mode	All
Restrictions	None
Functional Description	This command sets the amplifier in Sine Mode or Trap Mode. STMODE:S = Sine Mode STMODE:T = Trap Mode A WRITE command saves this value to the nonvolatile EEPROM memory.

USERDEFAULTS	Parameters
Command Format	USERDEFAULTS
Command Type	Configuration
Value Type	None
Range	None
Default Value	None
Active Mode	All
Restrictions	Amp must be disabled.
Functional Description	This command loads the user-configurable default settings. A WRITE command saves this value to the nonvolatile EEPROM memory.

WRITE	Parameters
Command Format	WRITE
Command Type	Configuration
Value Type	None
Range	None
Default Value	None
Active Mode	All
Restrictions	None
Functional Description	This command saves all user-settable parameters to the nonvolatile EEPROM memory.

3.14 LA6U Amplifier Front Panel Status Display Codes

The front panel 7-Segment displays provides real time status updates to each amplifier. This table details the meaning of each status code. The amplifier will be disabled while a fault condition exists.

Status Code	Description
0	Normal running operation. No fault are present. The amplifier is enabled.
C	Normal running operation. No fault are present. The amplifier is disabled.
0.	The decimal point indicates an impending continuous over-current condition. If the current level exceeds the set threshold for the set time period, a continuous over-current fault will occur.
U	Bus Under-Voltage condition. The bus voltage has dropped below the minimum threshold. This is a non-latching fault and will clear when the bus voltage is increased.
L	Continuous Over-Current fault condition. The current level has exceeded the RMSLEVEL threshold for the RMSTIME time period. This is a latching fault.
S	Absolute Over-Current fault condition. The current level has exceeded the ABSLEVEL threshold. This is a latching fault.
H	Heatsink Over-Temperature fault condition. The heatsink temperature has exceeded the OTLEVEL threshold. This is a latching fault.
6	SOA fault condition. The instantaneous power has exceeded the allowable power for the given amplifier state. This is a latching fault.
h	Motor Over-Temperature fault condition. The resistance of the motor temperature sensor has exceeded the MOTORTEMPLEVEL threshold. This is a latching fault.
b	Bus Over-Voltage fault condition. The bus voltage has exceeded the maximum threshold. This is a latching fault.
u	System supply voltage fault. A system supply voltage has exceeded the allowable range. This includes backplane supplied +5VDC, +/-15VDC, +24VDC and internal +3.3V.
E	Hall input error. An invalid hall state was detected on the Hall sensor input. This is a latching fault.
‾	Positive limit input is active. The positive limit input signal is active.
_	Negative limit input is active. The negative limit input signal is active.
4	Autobalance fault condition. The Autobalance routine was unable to balance the phase voltages.

3.15 LA6U Amplifier Motor Phase Voltage Balancing

Every LA6U amplifier module is balanced at the factory during test time. Sometimes because of thermal effects or offsets present on the command input from the controller it may become necessary to re-balance the phase voltages.

3.15.1 Auto-Balance

Each LA6U amplifier has the ability to auto-balance the phase voltage offsets using an internal algorithm and digitally controller pot. The algorithm is initiated either by asserting the auto-balance input signal on the Aux IO connector Pin-10 or using the “AUTOBALANCE” serial command. Once started, the algorithm will display a “-” middle bar on the front panel status display. Depending on the amount of offset, the phase voltage, and the load resistance the amount of time spent in the auto-balance routine varies from about 5 seconds to about 30 seconds. If the drive is unable to balance the phases, the routine exits and reports and auto-balance fault.

The auto-balance function is typically able to balance a load with a resistance that falls within the range of 1 ohm to 10 ohms. The auto-balance function may not consistently balance loads outside this range. This does not typically indicate a problem with the amplifier. It may indicate the load may need to be manually balanced. This is especially true if the manual balance pots have been moved from their factory calibrated position.

3.15.2 Manual Balance

If a condition exists where the auto-balance procedure is not successful, the amplifier may need to be manually balanced using the front panel potentiometers.

Please contact Varedan Engineering for assistance with this procedure.

4 VPS-LA6U Power Supply Modules

4.1 VPS-LA6U Power Supply Introduction

Based on the proved technology of Varedan VPS-LA stand-alone power supply modules, the VPS-LA6U power supply cards were designed for the high power multi-axis applications of the VRS-LA6U rack systems. As an all-in-one solution, the VPS-LA6U power supplies generate all required backplane voltages and supply the high voltage/high current Bus to all amplifiers on the backplane system. With 3-Phase AC Bus input, the VPS-LA6U can support the demands of a multi-axis system without generating excess noise.



VPS-LA6U Series Power Supply Module

4.2 VPS-LA6U Power Supply Features

- 3-Phase Center-Tapped AC Bus Input
- Up to +/-150VDC Bus Output
- Up to +/-60A Bus Current Output
- Aux-AC Input Range of 85-260VAC
- Internal Backplane System Voltage Rails of +5VDC, +/-15VDC, +24VDC
- Internal AC Bus Fusing
- Internal Aux-AC System Supply Fusing
- Front Panel System Power Switch
- Intelligent Power Supply – Backplane Communications Options

4.3 VPS-LA6U Power Supply Module Specifications

Parameter	VPS-LA6U Series
Aux-AC Input Voltage	85-260VAC
Backplane Bus Voltage – Maximum	+/-150VDC
Backplane Bus Current – Maximum	+/-60A
Backplane Voltage: +5VDC Output	10A
Backplane Voltage: +15VDC Output	3A
Backplane Voltage: -15VDC Output	3A
Backplane Voltage: +24VDC Output	2A

4.4 VPS-LA6U Power Supply Model Numbering

Characters in **RED** (X) are configuration fields. Field 1 is required.

Field Number		1
VPS-LA6U	-	**XXX**

Part Number Break Down by Field Number:

Field Number	Description	Present Options	Notes
VPS-LA6U	Varedan Power Supply for 6U Linear Amplifiers		Product Series
1	Unique Configuration Code for power supply. Includes maximum bus voltage, system supply, and fuse options.	001 = +/-150V max Bus, 30A AC Input Fuses	Required Assigned by Varedan Engineering

A fully configured VPS-LA6U Series Power Supply module part number will include all of the above fields. Such a number will uniquely define the full power supply module configuration at the time of shipping from the factory.

The “XXX” field 1 is assigned by the Varedan Applications Engineering team based on specific customer application requirements. These fields are incremental and the digits themselves have no inherent significance.

While general product series numbers are sometimes used for budgetary pricing such as “VPS-LA6U Series”, only fully configured part numbers should be used on Purchase Orders. If changes are made to a system during the engineering process, the final assigned fully configured part number should be updated in all systems and used on all future orders. This will help ensure product orders are accurate and complete and minimize production delays associated with confirming fully configured part numbers based on customer requirements.

4.5 VPS-LA6U Front Panel

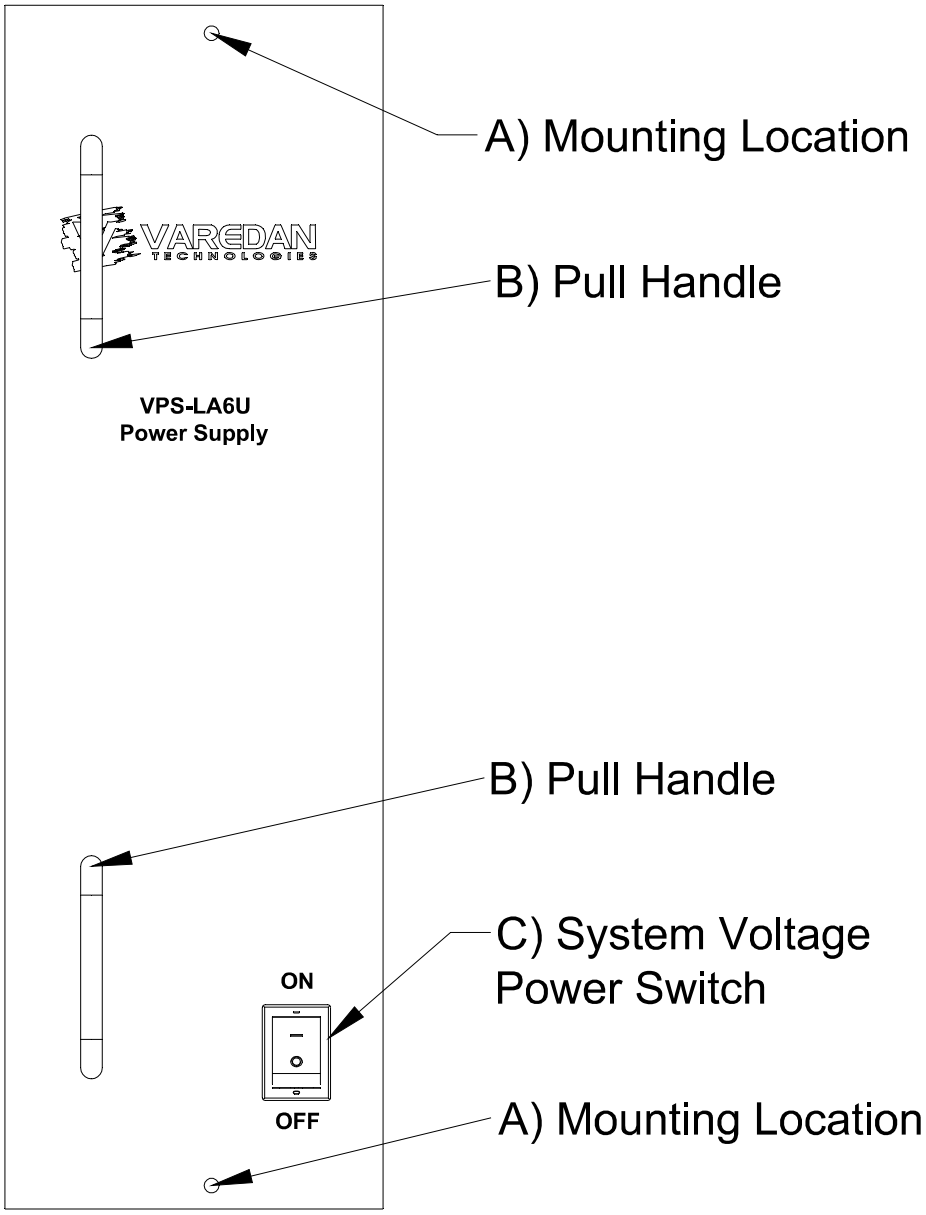

4.6 VPS-LA6U Fuses

Each VPS-LA6U power supply module support three 5AG fuses, one on each Bus AC input line. There is also a 3AG fuse on the Aux-AC input line.

5 Physical Dimensions

5.1 Rack Systems

5.1.1 VRS-LA6U-2A

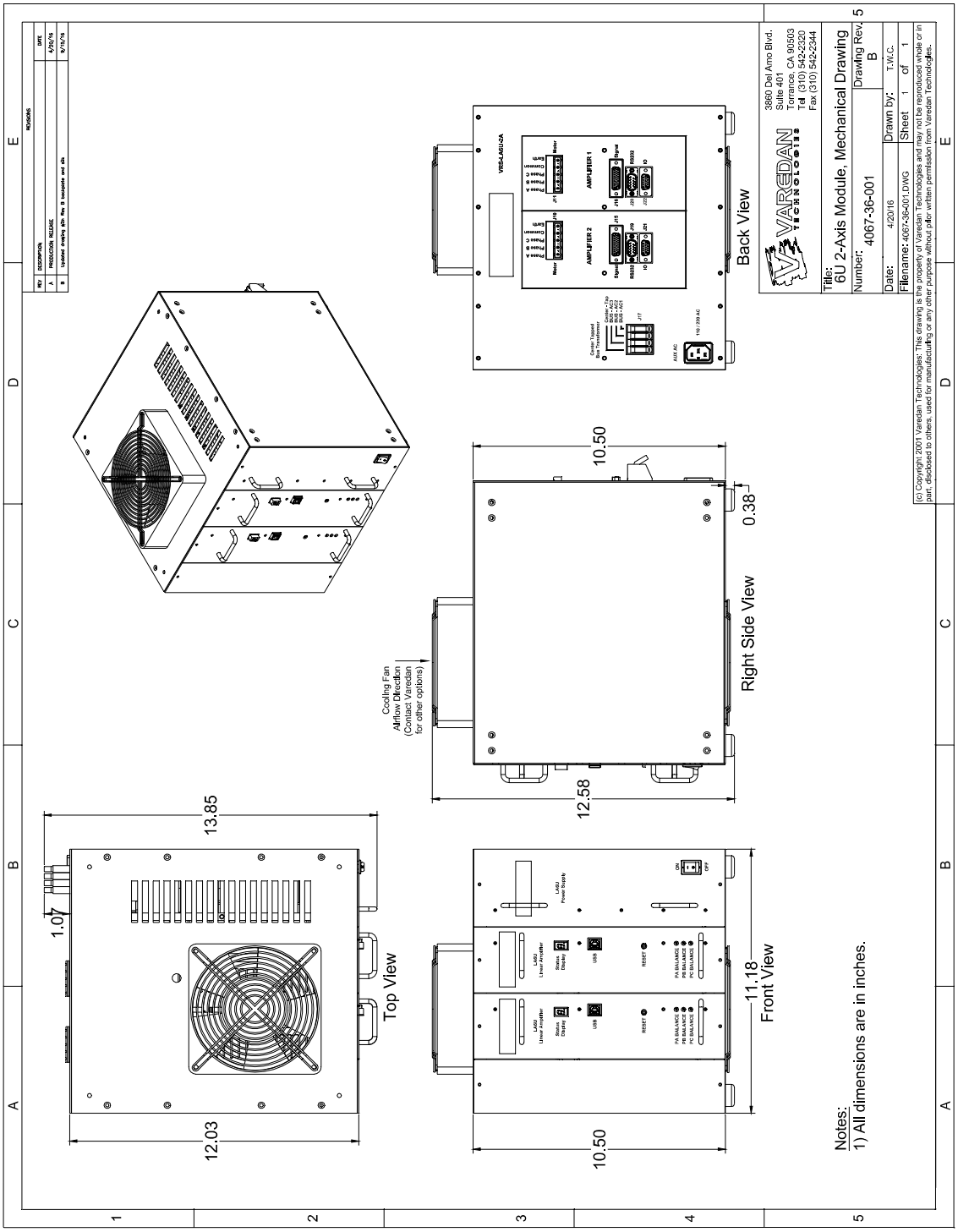

5.1.2 VRS-LA6U-5A

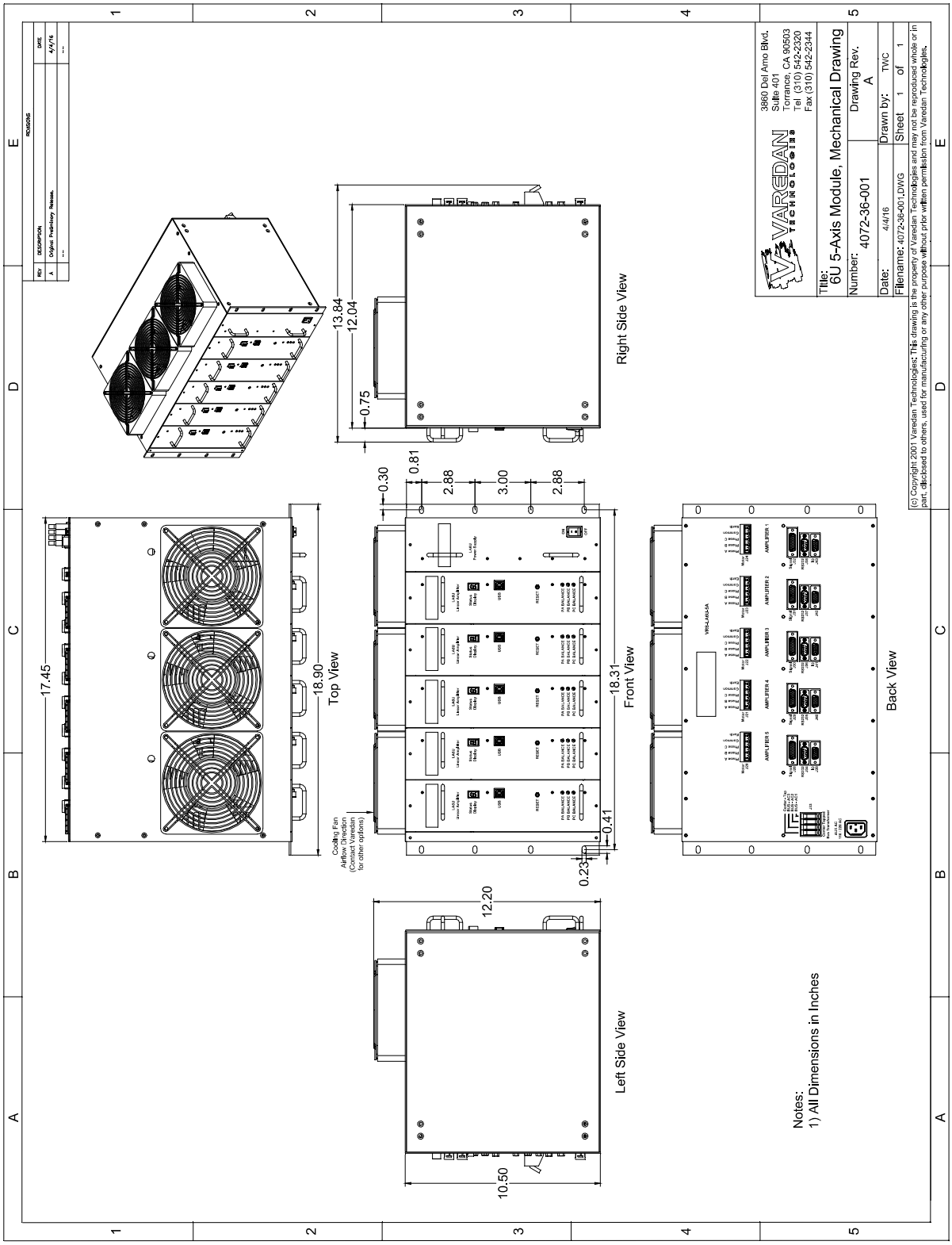

5.2 LA6U Amplifier Modules

5.2.1 LA6U-400 and LA60-500 Series Card Modules

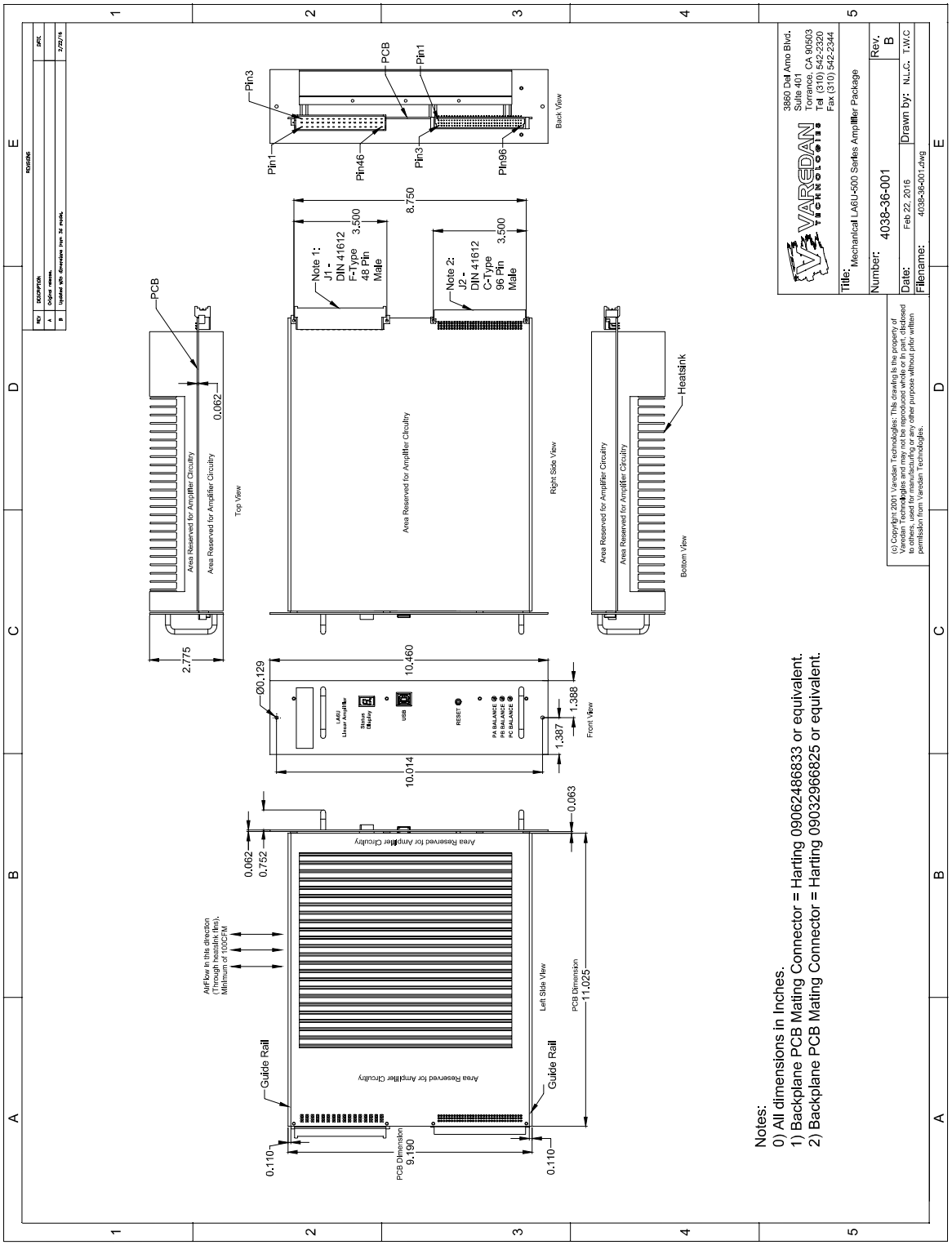

5.3 VPS-LA6U Power Supply Modules

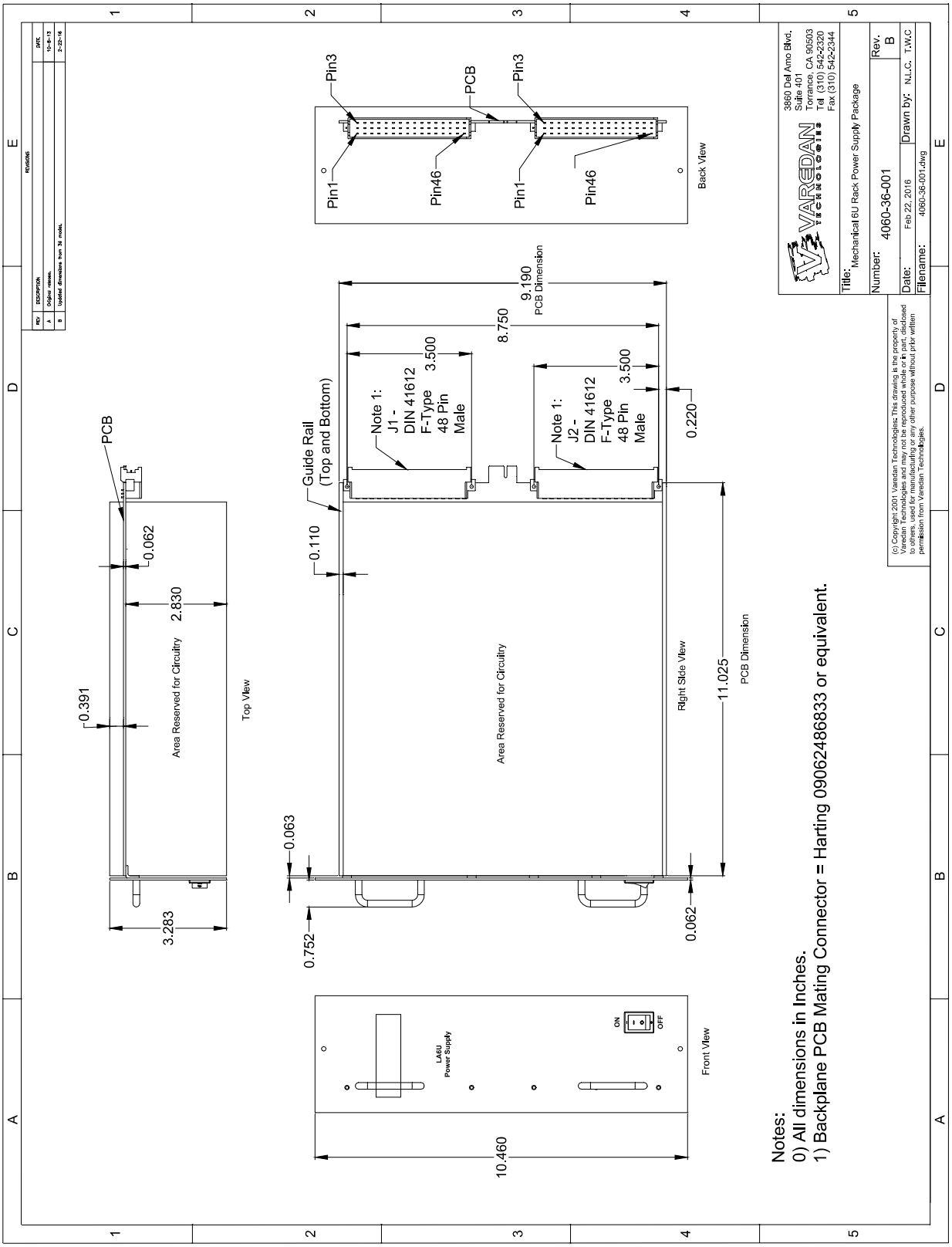

6 Backplane Connector Pinouts

This section contains connector and pinout information for the DIN-41612 compatible connectors on the LA6U amplifier and VPS-LA6U power supply modules. This information could be used to make a custom backplane or interface board for the LA6U series plug in modules. Standard 6U spacings are used on all connectors.

6.1 LA6U Amplifier Backplane Connector Basic Pinouts

J1 – Power
DIN 41612 F-Type Male 48 Pin
Backplane PCB Mating Connector = Harting 09062486833 or equivalent.

Pinout:

Pin Number	Signal	Description
1	Earth	Earth connection to chassis
2	Earth	Earth connection to chassis
3	Earth	Earth connection to chassis
4	Bus +	DC Bus Positive Voltage
5	Bus +	DC Bus Positive Voltage
6	Bus +	DC Bus Positive Voltage
7	Bus +	DC Bus Positive Voltage
8	Bus +	DC Bus Positive Voltage
9	Bus +	DC Bus Positive Voltage
10	Bus +	DC Bus Positive Voltage
11	Bus +	DC Bus Positive Voltage
12	Bus +	DC Bus Positive Voltage
13	Common	Bus Power Common
14	Common	Bus Power Common
15	Common	Bus Power Common
16	Common	Bus Power Common
17	Common	Bus Power Common
18	Common	Bus Power Common
19	Common	Bus Power Common
20	Common	Bus Power Common
21	Common	Bus Power Common
22	Bus -	DC Bus Negative Voltage

23	Bus -	DC Bus Negative Voltage
24	Bus -	DC Bus Negative Voltage
25	Bus -	DC Bus Negative Voltage
26	Bus -	DC Bus Negative Voltage
27	Bus -	DC Bus Negative Voltage
28	Bus -	DC Bus Negative Voltage
29	Bus -	DC Bus Negative Voltage
30	Bus -	DC Bus Negative Voltage
31	Motor Phase A	Motor Phase A Connection
32	Motor Phase A	Motor Phase A Connection
33	Motor Phase A	Motor Phase A Connection
34	Motor Phase A	Motor Phase A Connection
35	Motor Phase A	Motor Phase A Connection
36	Motor Phase A	Motor Phase A Connection
37	Motor Phase B	Motor Phase B Connection
38	Motor Phase B	Motor Phase B Connection
39	Motor Phase B	Motor Phase B Connection
40	Motor Phase B	Motor Phase B Connection
41	Motor Phase B	Motor Phase B Connection
42	Motor Phase B	Motor Phase B Connection
43	Motor Phase C	Motor Phase C Connection
44	Motor Phase C	Motor Phase C Connection
45	Motor Phase C	Motor Phase C Connection
46	Motor Phase C	Motor Phase C Connection
47	Motor Phase C	Motor Phase C Connection
48	Motor Phase C	Motor Phase C Connection

J2 – Signal
DIN 41612 C-Type Male 96 Pin
Backplane PCB Mating Connector = Harting 09032966825 or equivalent.

Pinout:

Pin Number	Signal	Description
1	Command A+	Differential command voltage for phase A
2	Common	Signal Common
3	Command A-	Differential command voltage for phase A
4	Command B+	Differential command voltage for phase B
5	Common	Signal Common
6	Command B-	Differential command voltage for phase B
7	Command C+	Differential command voltage for phase C (Requires 3 independent phase configuration)
8	Common	Signal Common
9	Command C-	Differential command voltage for phase C (Requires 3 independent phase configuration)
10	Common	Signal Common
11	Current Monitor (ABS_I)	Synthesized current monitor. Absolute value 0-5V output.
12	Input Opto Common	Optional Opto-Isolation for Input IO
13	Enable	Amplifier enable. Optionally opto-isolated.
14	Reset	Amplifier reset. Optionally opto-isolated.
15	User Opto-IO In 1	Digital IO input. Optionally opto-isolated.
16	User Opto-IO In 2	Digital IO input. Optionally opto-isolated.
17	Output Opto Pullup	Optional Opto-Isolation for Output IO
18	Fault	Amplifier Fault. Optionally opto-isolated.
19	User Opto-IO Out 1	Digital IO output. Optionally opto-isolated.
20	User Opto-IO Out 2	Digital IO output. Optionally opto-isolated.
21	Output Opto Common	Optional Opto-Isolation for Output IO
22	Limit +	Positive limit input
23	Limit -	Negative limit input
24	Common	Signal Common
25	Analog Current Monitor - C	Analog bipolar current monitor for motor phase C
26	Analog Current Monitor - B	Analog bipolar current monitor for motor phase B

27	Analog Current Monitor - A	Analog bipolar current monitor for motor phase A
28	Common	Signal Common
29	IO 1	Digital IO. Non-opto-isolated 0-5V
30	IO 2	Digital IO. Non-opto-isolated 0-5V
31	IO 3	Digital IO. Non-opto-isolated 0-5V
32	IO 4	Digital IO. Non-opto-isolated 0-5V
33	IO 5	Digital IO. Non-opto-isolated 0-5V
34	Common	Signal Common
35	RS232 RX	Amplifier communications - RS232 Receive
63	RS232 TX	Amplifier communications - RS232 Transmit
37	Reserved	Reserved pins must be left unconnected
38	Reserved	Reserved pins must be left unconnected
39	Reserved	Reserved pins must be left unconnected
40	Reserved	Reserved pins must be left unconnected
41	Common	Signal Common
42	DSP Program	Ground to put DSP into bootload mode for reprogramming. See programming instruction document for procedure.
43	Reserved	Reserved pins must be left unconnected
44	Reserved	Reserved pins must be left unconnected
45	Reserved	Reserved pins must be left unconnected
46	Reserved	Reserved pins must be left unconnected
47	Reserved	Reserved pins must be left unconnected
48	Reserved	Reserved pins must be left unconnected
49	Hall A Input	Hall sensor input A
50	Common	Signal Common
51	Hall B Input	Hall sensor input B
52	Common	Signal Common
53	Hall C Input	Hall sensor input C
54	Common	Signal Common
55	+5VDC Out	+5VDC Out
56	Motor Temp Input +	Motor Temp NTC/PTC Input +
57	Motor Temp Input -	Motor Temp NTC/PTC Input -
58	Reserved	Reserved pins must be left unconnected
59	Reserved	Reserved pins must be left unconnected

60	Reserved	Reserved pins must be left unconnected
61	Reserved	Reserved pins must be left unconnected
62	Reserved	Reserved pins must be left unconnected
63	Reserved	Reserved pins must be left unconnected
64	Common	Signal Common
65	Reserved	Reserved pins must be left unconnected
66	Reserved	Reserved pins must be left unconnected
67	Reserved	Reserved pins must be left unconnected
68	Reserved	Reserved pins must be left unconnected
69	Reserved	Reserved pins must be left unconnected
70	Reserved	Reserved pins must be left unconnected
71	Reserved	Reserved pins must be left unconnected
72	Reserved	Reserved pins must be left unconnected
73	Common	Signal Common
74	Reserved	Reserved pins must be left unconnected
75	Reserved	Reserved pins must be left unconnected
76	Common	Signal Common
77	+5VDC In	Backplane System Voltage Input : +5VDC (From Power Supply Module)
78	+5VDC In	Backplane System Voltage Input : +5VDC (From Power Supply Module)
79	+24VDC In	Backplane System Voltage Input : +24VDC (From Power Supply Module)
80	+24VDC In	Backplane System Voltage Input : +24VDC (From Power Supply Module)
81	+24VDC In	Backplane System Voltage Input : +24VDC (From Power Supply Module)
82	+15VDC In	Backplane System Voltage Input : +15VDC (From Power Supply Module)
83	+15VDC In	Backplane System Voltage Input : +15VDC (From Power Supply Module)
84	Common	Signal Common
85	-15VDC In	Backplane System Voltage Input : -15VDC (From Power supply Module)
86	-15VDC In	Backplane System Voltage Input : -15VDC (From Power supply Module)

87	Common	Signal Common
88	Common	Signal Common
89	Reserved	Reserved pins must be left unconnected
90	Reserved	Reserved pins must be left unconnected
91	Reserved	Reserved pins must be left unconnected
92	Reserved	Reserved pins must be left unconnected
93	Reserved	Reserved pins must be left unconnected
94	Reserved	Reserved pins must be left unconnected
95	Reserved	Reserved pins must be left unconnected
96	Reserved	Reserved pins must be left unconnected

6.2 VPS-LA6U Power Supply Backplane Connector Basic Pinouts

J1 – DC Output Power
DIN 41612 F-Type Male 48 Pin
Backplane PCB Mating Connector = Harting 09062486833 or equivalent.

Pinout:

Pin Number	Signal	Direction	Description
1	Earth		Earth connection to chassis
2	Earth		Earth connection to chassis
3	Earth		Earth connection to chassis
4	Bus +	Output	DC Bus Positive Voltage
5	Bus +	Output	DC Bus Positive Voltage
6	Bus +	Output	DC Bus Positive Voltage
7	Bus +	Output	DC Bus Positive Voltage
8	Bus +	Output	DC Bus Positive Voltage
9	Bus +	Output	DC Bus Positive Voltage
10	Bus +	Output	DC Bus Positive Voltage
11	Bus +	Output	DC Bus Positive Voltage
12	Bus +	Output	DC Bus Positive Voltage
13	Bus +	Output	DC Bus Positive Voltage
14	Bus +	Output	DC Bus Positive Voltage
15	Bus +	Output	DC Bus Positive Voltage
16	Common	Output	Bus Power Common
17	Common	Output	Bus Power Common
18	Common	Output	Bus Power Common
19	Common	Output	Bus Power Common
20	Common	Output	Bus Power Common
21	Common	Output	Bus Power Common
22	Common	Output	Bus Power Common
23	Common	Output	Bus Power Common
24	Common	Output	Bus Power Common
25	Common	Output	Bus Power Common
26	Common	Output	Bus Power Common
27	Common	Output	Bus Power Common

28	Bus -	Output	DC Bus Negative Voltage
29	Bus -	Output	DC Bus Negative Voltage
30	Bus -	Output	DC Bus Negative Voltage
31	Bus -	Output	DC Bus Negative Voltage
32	Bus -	Output	DC Bus Negative Voltage
33	Bus -	Output	DC Bus Negative Voltage
34	Bus -	Output	DC Bus Negative Voltage
35	Bus -	Output	DC Bus Negative Voltage
63	Bus -	Output	DC Bus Negative Voltage
37	Bus -	Output	DC Bus Negative Voltage
38	Bus -	Output	DC Bus Negative Voltage
39	Bus -	Output	DC Bus Negative Voltage
40	+5VDC	Output	Optional System Voltage
41	+5VDC	Output	Optional System Voltage
42	+24VDC	Output	Optional System Voltage
43	+15VDC	Output	Bias voltage output to amplifiers
44	+24VDC	Output	Optional System Voltage
45	+24VDC	Output	Optional System Voltage
46	+15VDC	Output	Bias voltage output to amplifiers
47	-15VDC	Output	Bias voltage output to amplifiers
48	-15VDC	Output	Bias voltage output to amplifiers

J2 – AC Input
DIN 41612 F-Type Male 48 Pin
Backplane PCB Mating Connector = Harting 09062486833 or equivalent.

Pinout:

Pin Number	Signal	Direction	Description
1	AC1	Input	3-Phase AC input from transformer
2	AC1	Input	3-Phase AC input from transformer
3	AC1	Input	3-Phase AC input from transformer
4	AC1	Input	3-Phase AC input from transformer
5	AC1	Input	3-Phase AC input from transformer
6	AC1	Input	3-Phase AC input from transformer
7	AC1	Input	3-Phase AC input from transformer
8	AC1	Input	3-Phase AC input from transformer
9	AC1	Input	3-Phase AC input from transformer
10	AC2	Input	3-Phase AC input from transformer
11	AC2	Input	3-Phase AC input from transformer
12	AC2	Input	3-Phase AC input from transformer
13	AC2	Input	3-Phase AC input from transformer
14	AC2	Input	3-Phase AC input from transformer
15	AC2	Input	3-Phase AC input from transformer
16	AC2	Input	3-Phase AC input from transformer
17	AC2	Input	3-Phase AC input from transformer
18	AC2	Input	3-Phase AC input from transformer
19	AC3	Input	3-Phase AC input from transformer
20	AC3	Input	3-Phase AC input from transformer
21	AC3	Input	3-Phase AC input from transformer
22	AC3	Input	3-Phase AC input from transformer
23	AC3	Input	3-Phase AC input from transformer
24	AC3	Input	3-Phase AC input from transformer
25	AC3	Input	3-Phase AC input from transformer
26	AC3	Input	3-Phase AC input from transformer
27	AC3	Input	3-Phase AC input from transformer
28	AC-Center Tap	Input	3-Phase AC transformer center-tap
29	AC-Center Tap	Input	3-Phase AC transformer center-tap

30	AC-Center Tap	Input	3-Phase AC transformer center-tap
31	AC-Center Tap	Input	3-Phase AC transformer center-tap
32	AC-Center Tap	Input	3-Phase AC transformer center-tap
33	AC-Center Tap	Input	3-Phase AC transformer center-tap
34	AC-Center Tap	Input	3-Phase AC transformer center-tap
35	AC-Center Tap	Input	3-Phase AC transformer center-tap
63	AC-Center Tap	Input	3-Phase AC transformer center-tap
37	AC-Center Tap	Input	3-Phase AC transformer center-tap
38	AC-Center Tap	Input	3-Phase AC transformer center-tap
39	AC-Center Tap	Input	3-Phase AC transformer center-tap
40	No Connect		
41	No Connect		
42	No Connect		
43	Aux-AC1	Input	1-Phase 110VAC/220VAC aux input
44	Aux-AC1	Input	1-Phase 110VAC/220VAC aux input
45	Aux-AC1	Input	1-Phase 110VAC/220VAC aux input
46	Aux-AC2	Input	1-Phase 110VAC/220VAC aux input
47	Aux-AC2	Input	1-Phase 110VAC/220VAC aux input
48	Aux-AC2	Input	1-Phase 110VAC/220VAC aux input

7 Document Revisions

Revision	Date	Comments
A	10/24/16	Initial Release
B	3/13/17	Added first sets of “Standard” configuration settings.

代理商：北京慧摩森电子系统技术有限公司
地址：北京市朝阳区幺家店路甲1号玲珑文创园106
电话：010-62311872
传真：010-62316782
邮箱：sales@bjsm.com.cn