Zettlex

Precision in the Extreme

IncOder™ Product Guide
Midi Range
Inductive Angle Encoders

代理商：北京慧摩森电子系统技术有限公司
地址：北京市朝阳区幺家店路甲1号玲珑文创园106
电话：010-62311872
传真：010-62316782
邮箱：sales@bjsm.com.cn

MIDI Revision 4.11.4 January 2018

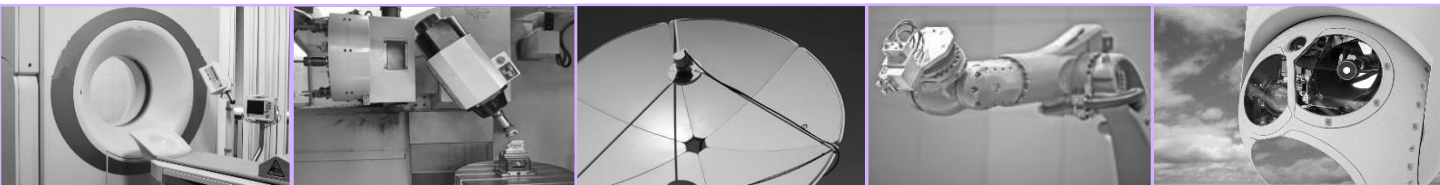

Zettlex

Precision in the Extreme

- ✓ No contacts
- ✓ No bearings
- ✓ No couplings
- ✓ No maintenance
- ✓ Absolute
- ✓ Compact
- ✓ Easy installation
- ✓ Accurate
- ✓ Robust
- ✓ Integral electronics
- ✓ >200 Million product options
- ✓ Economical
- ✓ Global support

……..they tick all the boxes.

Contents

1. Introduction 4
2. Product Options 6
3. Customised Products 7
4. Manufacturing & Quality 8
5. Technical Data 9
5.1 Screw Mount Stator & Screw Mount Rotor Format - Product Option INC-3 9
5.2 Servo Clamp Stator & Set Screw Rotor Format - Product Option INC-4 11
5.3 Servo Clamp Stator & Plain Rotor Format - Product Option INC-6 13
5.4 Duplex Format – Product Option INC-10 15
5.5 External Mount Stator & Screw Mount Rotor - Product Option INC-13 17
5.6 Mechanical Format Combinations 19
5.7 Custom Mechanical Formats 19
5.8 Radial Connections - Product Options RFC1-14 20
5.9 Integral Axial Cable - Product Options AFL1-52 25
5.10 Extended Product Range 27
5.11 Measurement & Electrical Data 29
5.12 Environmental & Further Data 31
6. Communication Interfaces 32
6.1 Output Resolution 32
6.2 Multi-Turn or Single Turn 32
6.3 Zero Point, Zero Set & Zero Reset for Digital Outputs 32
6.4 Synchronous Serial Interface (SSI) - Product Options SSI1-SSI9 33
6.5 Asynchronous Serial Interface - Product Option ASI1-2 36
6.6 Serial Peripheral Interface - Product Option SPI1 37
6.7 Analogue Voltage Interface - Product Options V, W, X & Y0360 etc. 39
6.8 A/B/Z Pulse Interface – Product Options ABZ1 to ABZ6 41
6.9 BiSS-C Interface – Product Option BIS1 42
7. Connector Diagrams 43
8. Product Ordering 44
9. Accessories 46
10. Frequently Asked Questions 51
11. Contact 54

1. Introduction

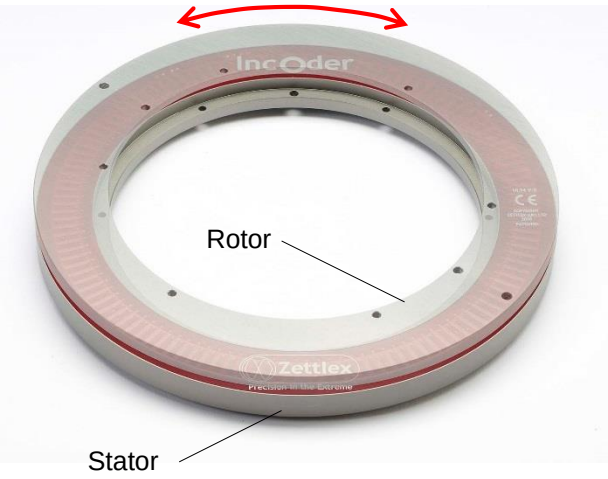

Zettlex IncOders are non-contact devices for precise angle measurement. They use an inductive technique, similar to that used by electrical transformers. IncOders may be considered as an inductive encoder.

IncOders are well suited to harsh environments - where potentiometers, optical or capacitive devices might be unreliable.

IncOders have two main parts each shaped like a flat ring: a Stator and a Rotor. The Stator is powered and measures the angular position of the passive Rotor.

A big bore and low axial height allows easy integration with through-shafts, slip-rings, direct drive motors, optical-fibres, pipes or cables.

IncOder technology is proven technology – tried and tested in tough conditions on land, sea and in the air.

IncOders require no service or maintenance and so they are 'fit and forget' devices.

They are designed and built so they won't let you down when the going gets tough.

IncOders make it easy to achieve high precision, high reliability angle measurement.

There is no need to consider bearing alignment, seals or wearing parts.

Whereas optical or capacitive sensors can be unreliable in harsh conditions – notably with condensation or dust - IncOders are generally unaffected by foreign matter and IP68 rated versions are available.

Unlike capacitive devices, there is no need to earth the Rotor or Stator.

Robust, hard-anodized aluminium alloy housings and monolithic constructions are used throughout.

1. Introduction

The Stator contains all the electronics to receive power and output a signal. The output signal shows the position of the Rotor relative to the Stator.

Absolute and incremental outputs are available as standard options with various electrical outputs. The absolute devices are truly absolute which means that they need no motion at power up to determine position.

Compliant or special couplings are not required, so the Rotor & Stator can simply be fixed directly to the host product.

Precise mechanical mounting is not necessary to achieve high measurement performance and there are no bearings.

The measurement performance stated in this Product Guide is guaranteed provided that the IncOder is installed as per its installation tolerances.

IncOders have a solid track record in demanding applications such as industrial machinery, security and defence equipment, naval and marine equipment. IncOders are designed and built in ISO-9001 accredited facilities in the United Kingdom; contain no ITAR restricted components and do not require an export licence unless they are >1000mm diameter.

Applications include :-

- Rotary joints & gimbals
- Actuator servos & motor encoders
- Electro-optical & infra-red camera systems
- Heliostats & solar equipment
- Robotic arms & CNC machine tools
- Test & calibration equipment
- Light & heavy calibre weapons systems
- Targeting systems & range finders
- Antenna pointing devices & telescopes
- Packaging & laboratory automation
- Medical scanners & surgical equipment
- Cranes & telescopic manipulators.

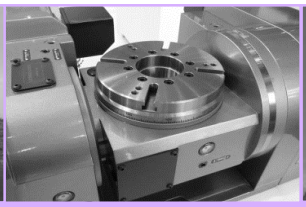

2. Product Options

The IncOder range offers more than 200 million product options. **Specify the right product for your application using the IncOder Product Option / Part Number (see Section 8).** Each IncOder contains one Stator and one Rotor. Stators & Rotors are not matched pairs – in other words, either element may be swapped out for replacement, if necessary. The range of options are:-

Mechanical Format : mechanical formats include screw mount, servo clamp, external mount & duplex stators as well as plain, screw mount, set-screw and duplex rotors – see Section 5.

IncOder Size : stated as outer diameter: 75, 90, 100 etc. up to 300mm – see Section 5. For smaller or larger products see Mini or Maxi IncOder ranges.

Resolution Options : 10 to 22bits or any integer number of pulses - see Section 6.

Communication Interface Options :
Synchronous Serial Interface – see Section 6.4 (Product Options SSI1-9)
Asynchronous Serial Interface – see Section 6.5 (Product Option ASI1 & ASI2)
Serial Peripheral Interface – see Section 6.6 (Product Option SPI1)
Analogue Voltage Interface – see Section 6.7 (Product Option V0360, W3601, X0270 etc.)
A/B/Z pulses – see Section 6.8 (Product Option ABZ1 etc.)
BISS-C – see Section 6.9 (Product Options BIS1)

Connection Options : radial and axial connections as well as integral cables – see Section 5.8-9.

Voltage Options : 5, 12 or 24VDC.

Extended Range Options : these options are only intended for ultra high-reliability applications which may require extended thermal stress screening, bake-out, high shock/vibration constructions, use of conductive surface finishes, leaded solder, high pressure, long-term water immersion, low or high operating temperatures – see Section 5.14.

A range of Accessories is also available (see Section 9) including:

Cables : various shielded cables with connector.

Servo Clamp : to suit Servo Clamp Stators.

Spacer Ring : an aluminium ring to space Stators from host equipment and provide a protective cavity for the Rotor.

Rotor Shaft Clamp : a device for connecting Screw Mount Rotors to shafts.

Shims : plastic shims for loosely toleranced installations.

3. Customised Products

Zettlex often modify IncOders to specific OEM requirements. Potential changes include :-

- size (up to 595mm outer diameter)
- mechanical mounts and materials, including stainless steel
- voltage supplies
- electrical outputs
- measurement performance (up to 24 bit resolution per rev.)
- connectors, cables & immersion protection
- surface finish – black-anodized, natural, painted or Surtec650
- temperature range – notably to <-60Celsius or >105Celsius
- low weight or low inertia
- ATEX certified.

Consult Zettlex or your local representative for further information. Typically, customised products are an economical option in volumes of >100 units/year. Engineering/tooling charges may apply depending on order quantity. Some examples are shown below and guidance on suitable dimensions provided in Section 5.7.

End of shaft unit with black-anodized custom housing & military connector for fighting vehicles.

Custom housing with chromate surface finish & integral cable for remotely controlled gimbal.

Ultra lightweight (13gram) miniature unit.

Electrically duplex lightweight encoder with collar clamp.

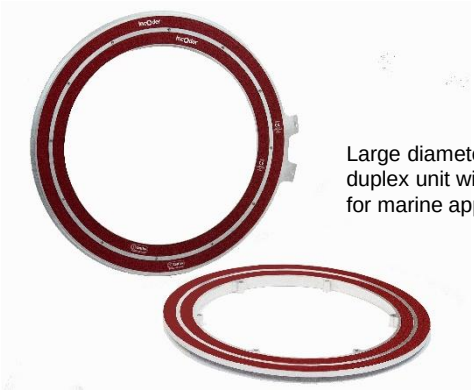

Large diameter (450mm), duplex unit with integral cables for marine application.

Duplex 'back to back' device with tangential shell connector.

4. Manufacturing & Quality

IncOders are designed, made, tested and shipped by Zettlex's facility in Cambridge, UK. Commercial and technical support is provided by the same site or through our global network of partners.

IncOder manufacturing processes are well established, having been perfected over years and the production of thousands of products. Every IncOder is serial numbered and tested according to a rigorous acceptance test procedure before dispatch. Detailed test records for every IncOder are stored by Zettlex.

Certificates of conformity are available as well as a RoHS compliance certificate and a REACH statement. IncOders are not ITAR restricted and use no ITAR components. A UK government export license is typically not required for the devices specified in this Product Guide.

All design, manufacturing and commercial processes operate under a comprehensive ISO-9001:2008 quality management system, developed by Zettlex engineers. The quality management system is subject to regular internal and external audit – including an annual audit by a UKAS accredited, independent authority. Zettlex is also certified for the design and manufacture of intrinsically safe (ATEX) sensors under BS EN 13980. Electronics manufacturing is to IPC Class III standards.

A copy of our ISO-9001 and ATEX certificate is available on www.zettlex.com.

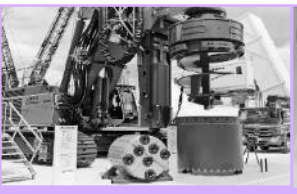

5.1 Screw Mount Stator & Screw Mount Rotor Format - Product Option INC-3

Zettlex
Precision in the Extreme

NOTES
1. **3D CAD IGES FILES AVAILABLE ON WWW.ZETTLEX.COM**
2. UNIT SHOWN WITH AXIAL CONNECTOR (AC1)
3. ALL DIMS IN mm – DO NOT SCALE
4. 3RD ANGLE PROJECTION
5. TOLERANCES:- 0 DECIMAL PLACES = ±0.5
   1 DECIMAL PLACES = ±0.2
   2 DECIMAL PLACES = ±0.1

Most popular format

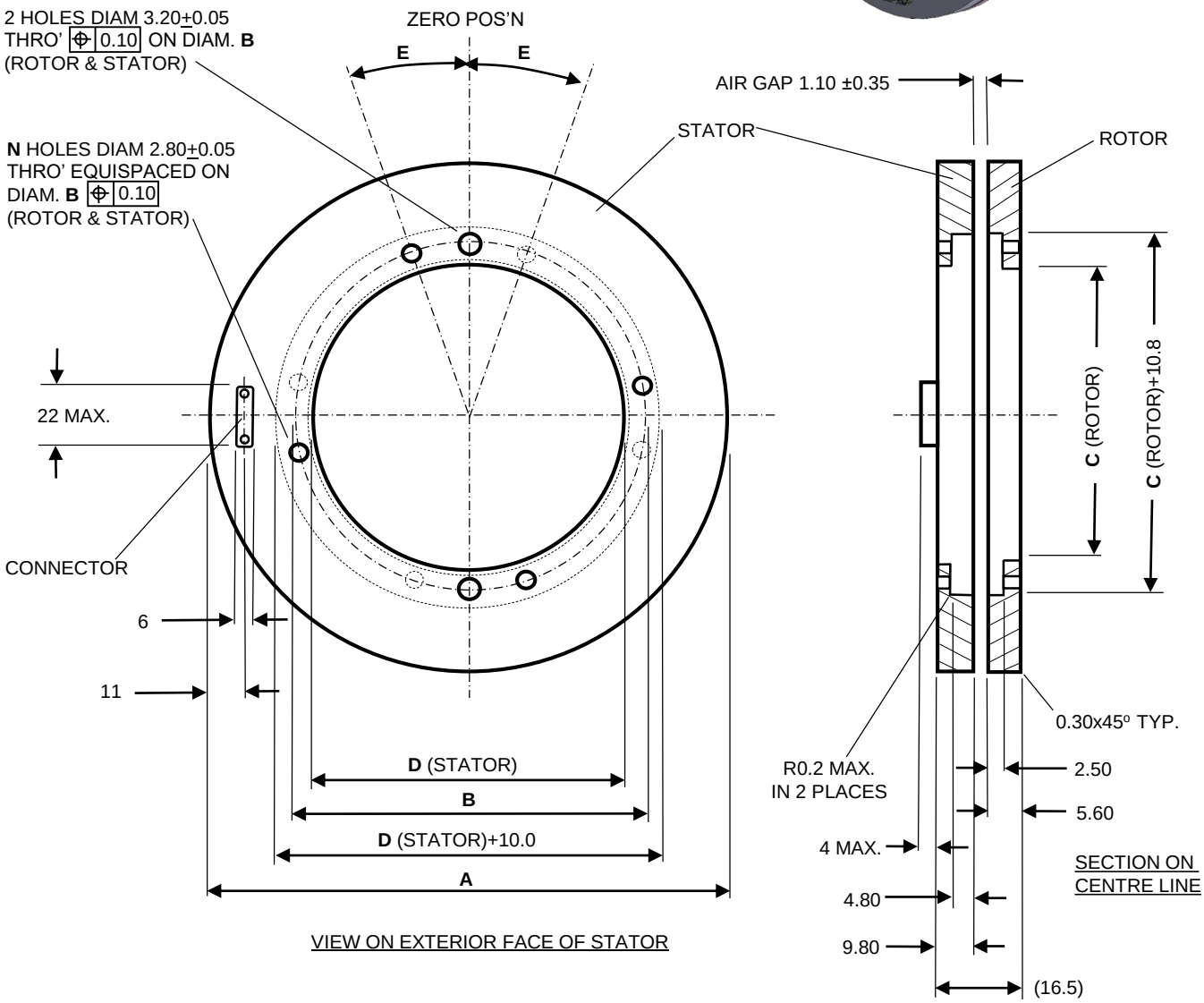

	INC-3-75	INC-3-90	INC-3-100	INC-3-125	INC-3-150	INC-3-175	INC-3-200	INC-3-225	INC-3-250	INC-3-300	
Dim. A : Stator / Rotor Body O.D.	75.00	90.00	100.00	125.00	150.00	175.00	200.00	225.00	250.00	300.00	mm
Dim. B : Pitch Circle Diameter	30.50	45.50	55.50	80.50	105.50	130.50	155.50	180.50	205.50	255.50	mm
Dim. C : Rotor I.D.	25.00	40.00	50.00	75.00	100.00	125.00	150.00	175.00	200.00	250.00	mm
Dim. D : Stator I.D.	25.80	40.80	50.80	75.80	100.80	125.80	150.80	175.80	200.80	250.80	mm
Dim. E : Offset Angle from T.D.C.	30	30	30	30	30	30	30	30	20	20	degrees
N Number of screw clearance holes	4	4	4	4	6	6	6	6	8	8	
Max. radial misalignment	0.25										mm
Rotor & Stator fixings	Steel screws cap head M2.5 & steel dowels M3										

5.1 Screw Mount Stator & Screw Mount Rotor Format - Product Option INC-3

Screw Mount Format IncOders can be installed in various ways and the following sketches show a few examples. Provided the axial gap and concentricity tolerances are maintained, then the stated measurement performance will be met.

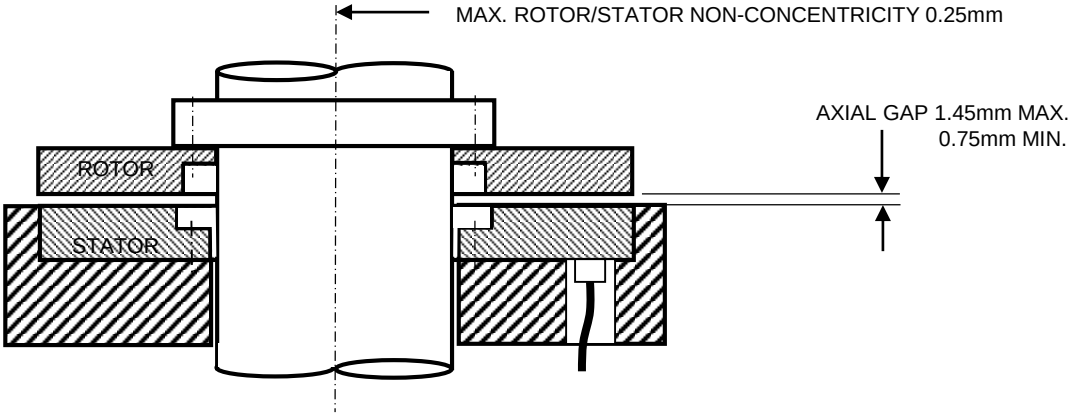

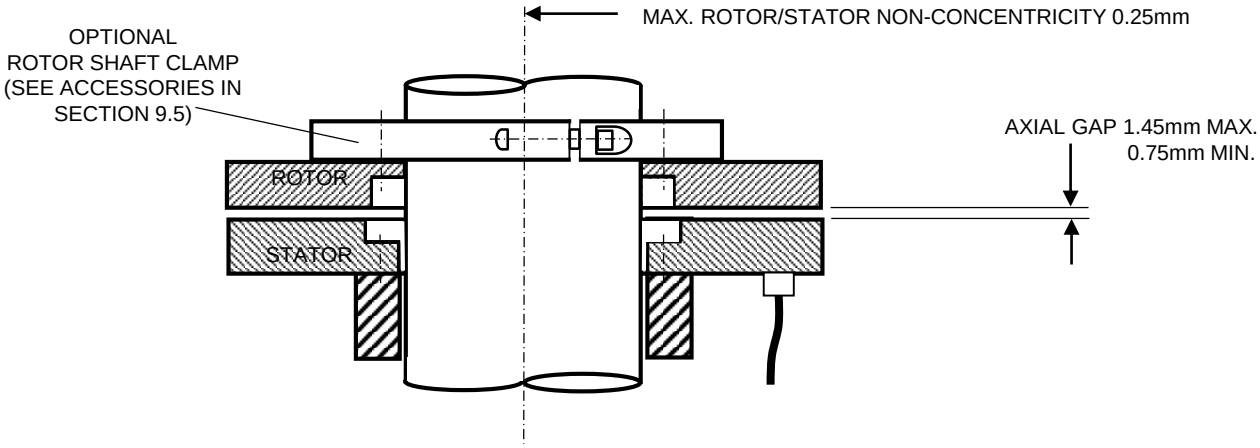

All formats of IncOder can be installed using a circumferential clamp in the host equipment. This applies to Rotor or Stator. Preferably the C-ring's gap is closed by at least one screw.

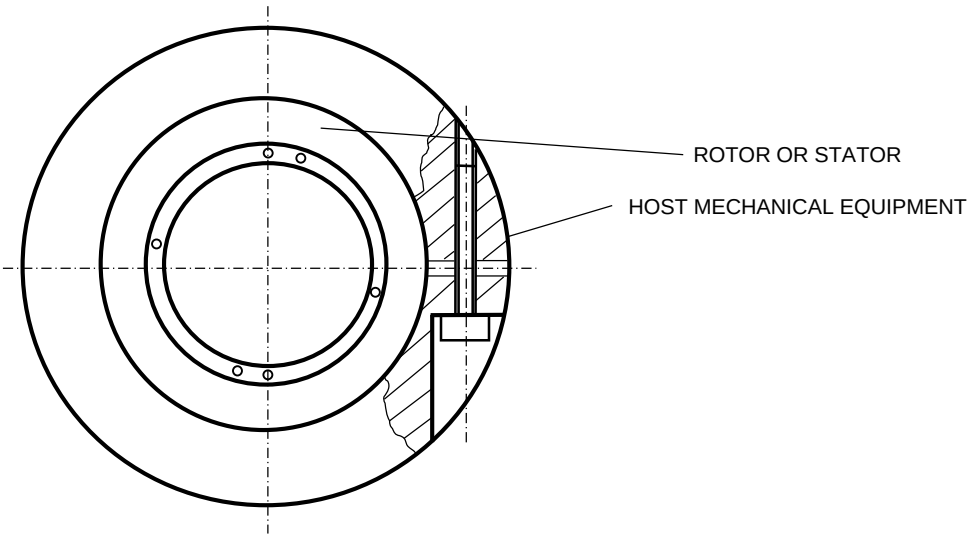

5.2 Servo Clamp Stator & Set Screw Rotor Format - Product Option INC-4

NOTES

1. **3D CAD IGES FILES AVAILABLE ON WWW.ZETTLEX.COM**
2. UNIT SHOWN WITH AXIAL CONNECTOR AC1
3. SEE SECTION 9.3. FOR CORRESPONDING SERVO CLAMPS
4. ALL DIMS IN mm – DO NOT SCALE
5. 3RD ANGLE PROJECTION
6. TOLERANCES:- 0 DECIMAL PLACES = ±0.5
   1 DECIMAL PLACES = ±0.2
   2 DECIMAL PLACES = ±0.1

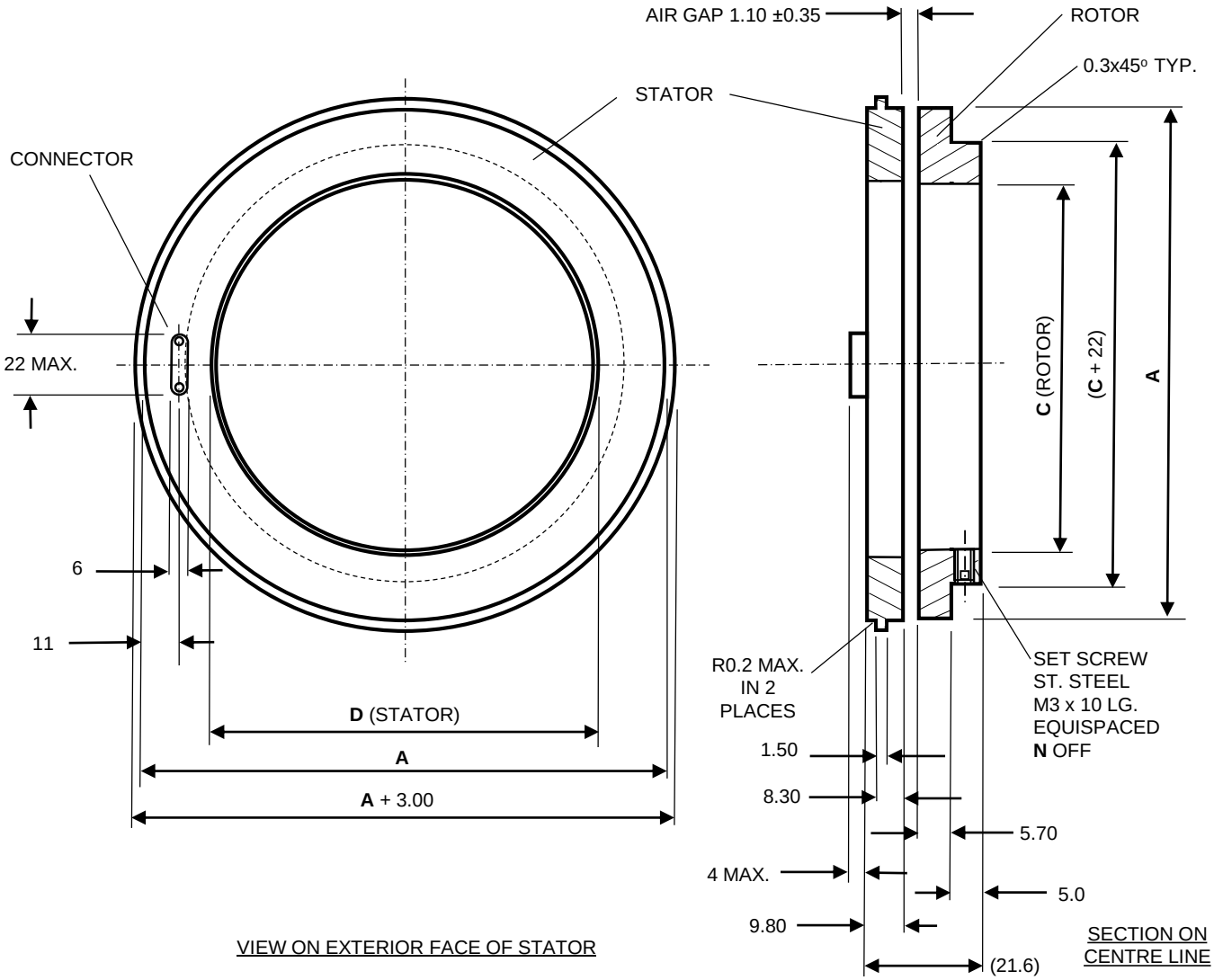

	INC-4-75	INC-4-90	INC-4-100	INC-4-125	INC-4-150	INC-4-175	INC-4-200	INC-4-225	INC-4-250	INC-4-300	
Dim. A : Stator / Rotor Body O.D.	75.00	90.00	100.00	125.00	150.00	175.00	200.00	225.00	250.00	300.00	mm
Dim. C : Rotor I.D.	35.00	40.00	60.00	85.00	110.00	135.00	160.00	185.00	210.00	260.00	mm
Dim. D : Stator I.D.	35.80	40.80	60.80	85.80	110.80	135.80	160.80	185.80	210.80	260.80	mm
N Number of Set Screws	3	3	3	3	3	4	4	6	6	8	
Max. radial misalignment	0.25										mm
Rotor & Stator fixings	Rotor by Set Screws St. Steel (supplied). Stator by Servo Clamps (see Accessories) or host equipment										

5.2 ≥75mm Servo Clamp Stator & Set Screw Rotor Format - Product Option INC-4

Servo Mount Format IncOders can be installed in various ways and the following sketches show a few examples. Provided the axial gap and concentricity tolerances are maintained, then the stated measurement performance will be met. For IncOder 75, 90, 100 & 125mm sizes use 3 Servo Clamps; for 150 & 175mm use at least 4 and at least 6 Servo Clamps for larger sizes.

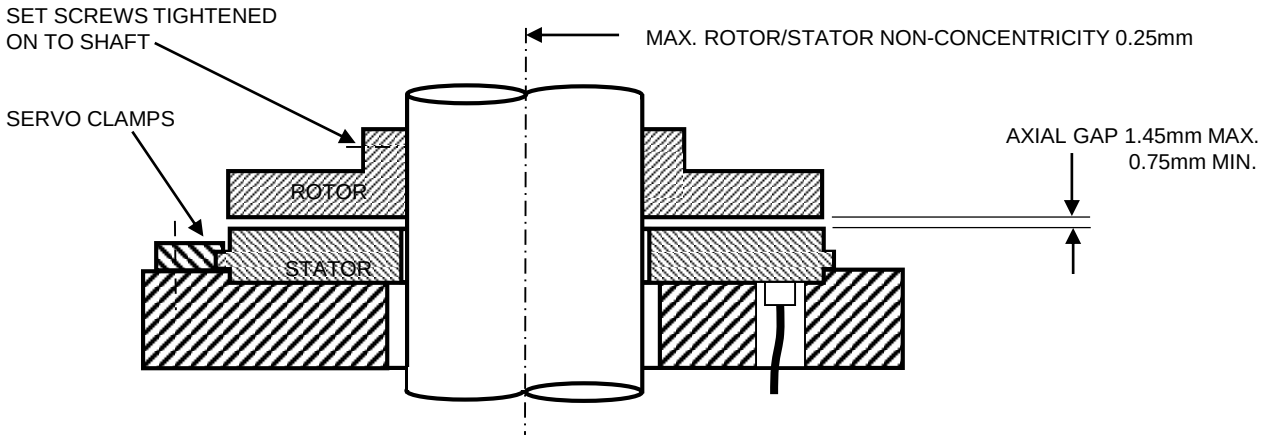

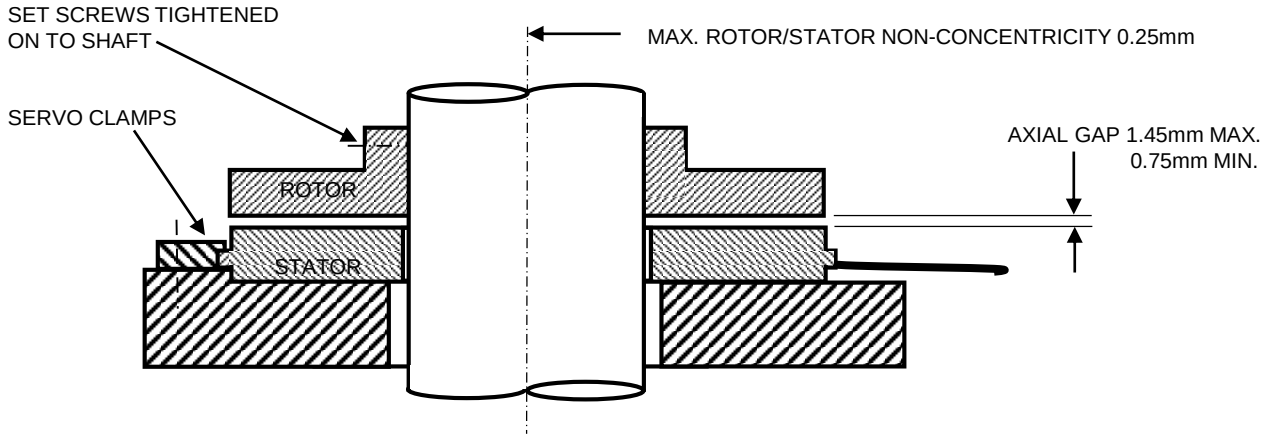

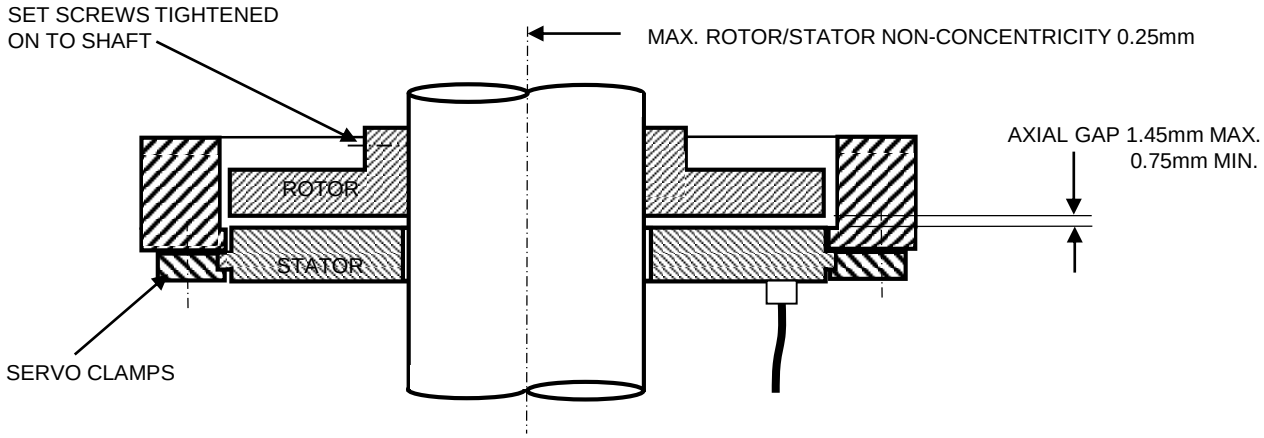

5.3 Servo Clamp Stator & Plain Rotor Format - Product Option INC-6

NOTES

1. **3D CAD IGES FILES AVAILABLE ON WWW.ZETTLEX.COM**
2. SEE SECTION 9.3 FOR CORRESPONDING SERVO CLAMPS
3. UNIT SHOWN WITH AXIAL CONNECTOR AC1
4. ALL DIMS IN mm – DO NOT SCALE
5. 3RD ANGLE PROJECTION
6. TOLERANCES:- 0 DECIMAL PLACES = ±0.5
   1 DECIMAL PLACES = ±0.2
   2 DECIMAL PLACES = ±0.1

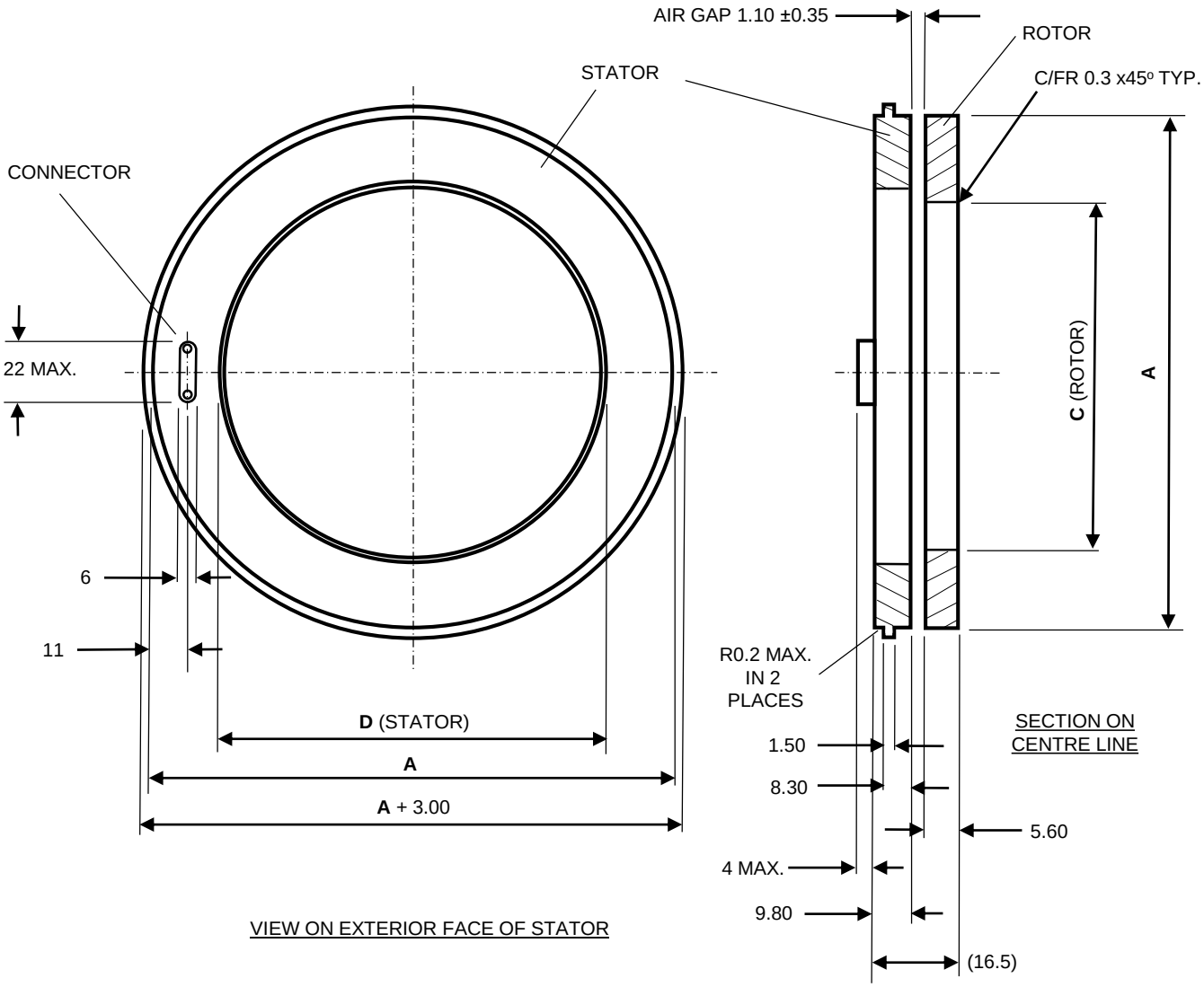

	INC-6-75	INC-6-90	INC-6-100	INC-6-125	INC-6-150	INC-6-175	INC-6-200	INC-6-225	INC-6-250	INC-6-300	
Dim. A : Stator / Rotor Body O.D.	75.00	90.00	100.00	125.00	150.00	175.00	200.00	225.00	250.00	300.00	mm
Dim. C : Rotor I.D.	30.00	45.00	55.00	80.00	105.00	130.00	155.00	180.00	205.00	255.00	mm
Dim. D : Stator I.D.	35.80	40.80	60.80	85.80	110.80	135.80	160.80	185.80	210.80	260.80	mm
Max. radial misalignment	0.25										mm
Rotor & Stator fixings	Rotor by host equipment and Stator by Servo Clamps (ordered separately - see Accessories) or host equipment										

5.3 Servo Clamp Stator & Plain Rotor Format - Product Option INC-6

IncOders with Servo Clamp Stators & Plain Rotors can be installed in various ways and some examples are shown below. Provided the axial gap and concentricity tolerances are maintained, then the stated measurement performance will be met. For IncOder 75, 90, 100 & 125mm sizes use 3 Servo Clamps; for 150 & 175 use at least 4 and at least 6 Servo Clamps for larger sizes.

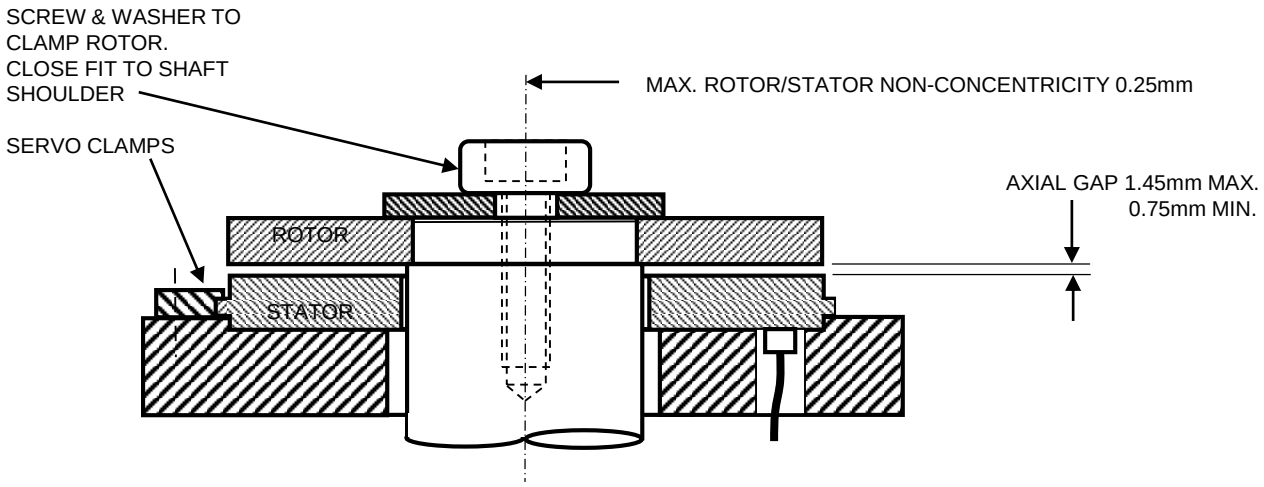

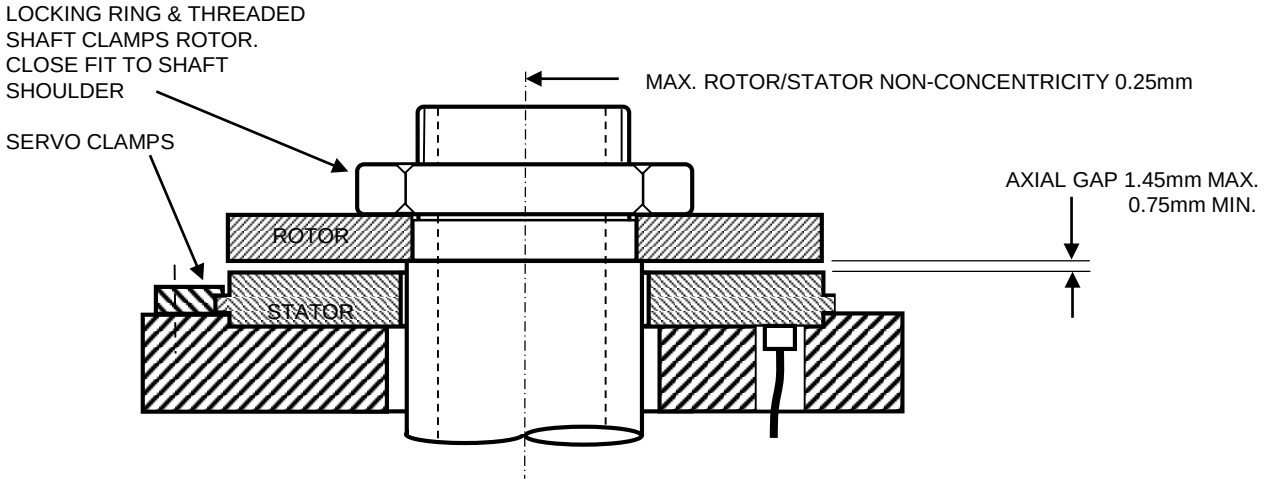

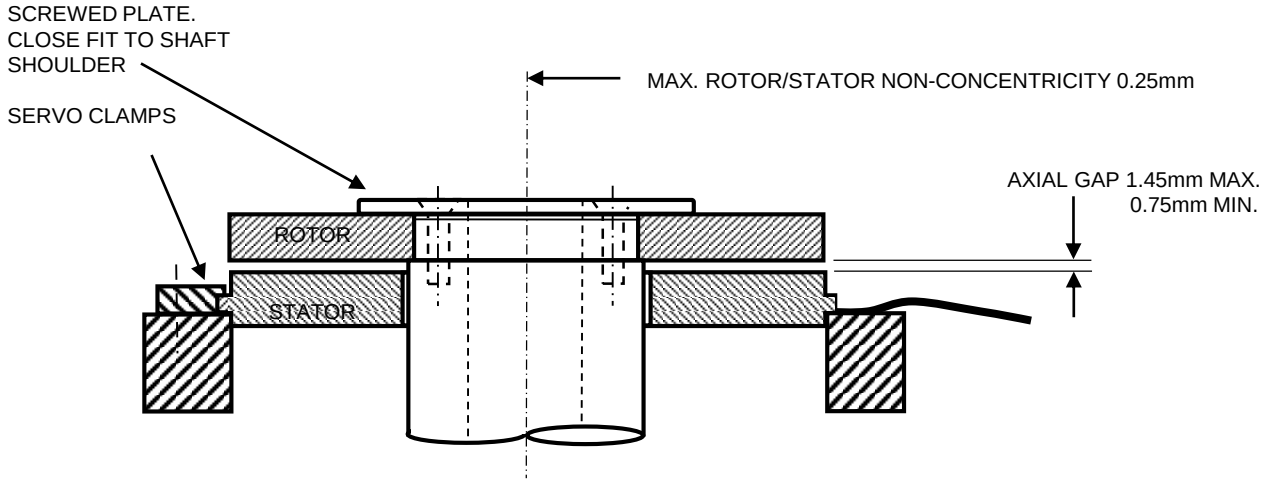

5.4 Duplex Format
Product Option INC-10

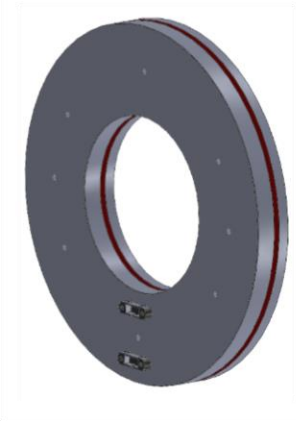

NOTES

1. **3D CAD IGES FILES AVAILABLE ON WWW.ZETTLEX.COM**
2. UNIT SHOWN WITH AXIAL CONNECTOR AC1
3. ALL DIMS IN mm – DO NOT SCALE
4. 3RD ANGLE PROJECTION
5. TOLERANCES:- 0 DECIMAL PLACES = ±0.5
   1 DECIMAL PLACES = ±0.2
   2 DECIMAL PLACES = ±0.1

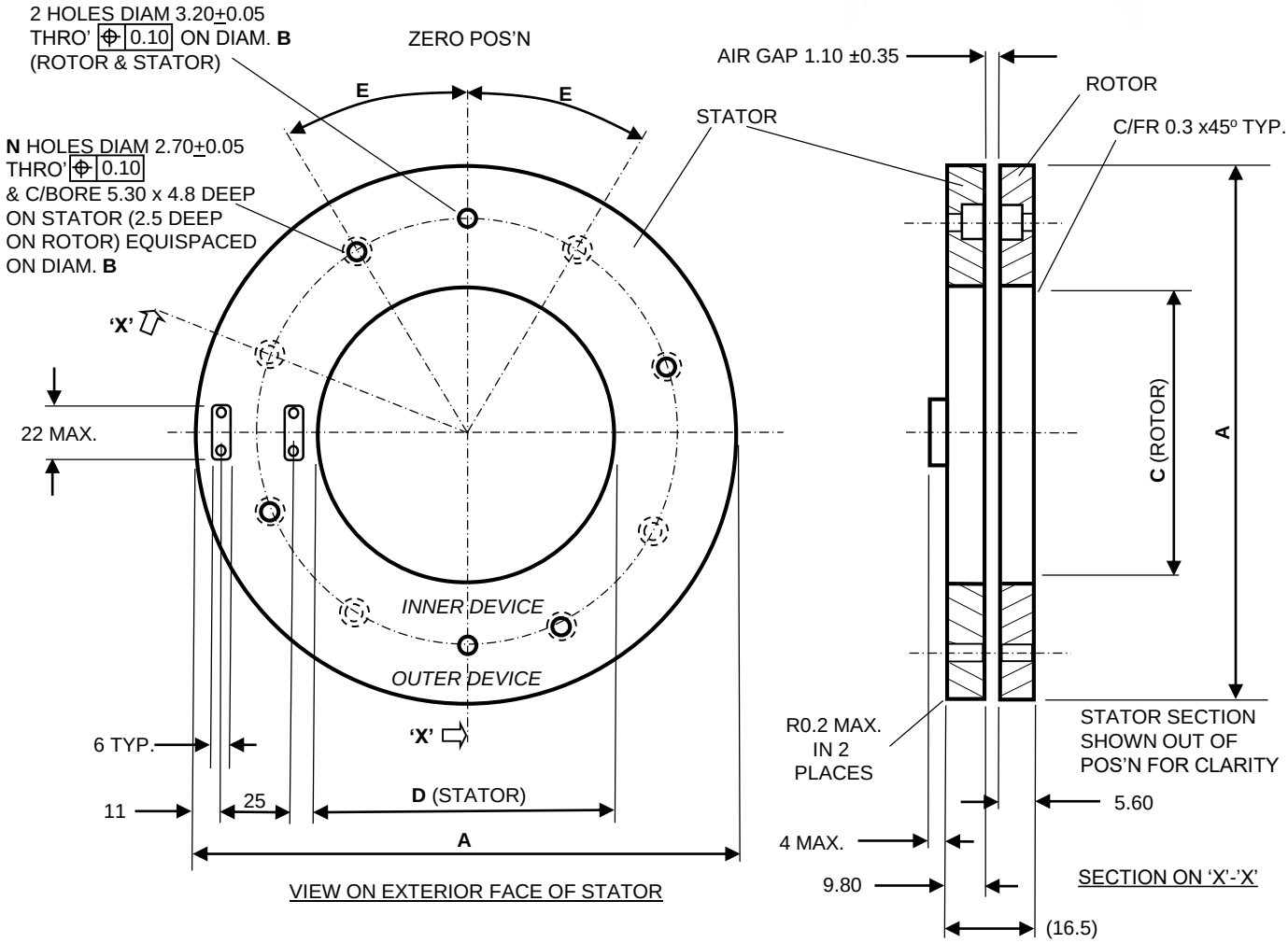

Duplex IncOders are electrically redundant:- 2 electrically independent IncOders in 1 package – the first on the outer annulus, the second on the inner. The range starts at an O.D. of 125mm with axial connections (AC1) or integral flying leads (AFL1-5). Note - measurement performance is quoted for the outer annulus device.

	INC-10-75	INC-10-90	INC-10-100	INC-10-125	INC-10-150	INC-10-175	INC-10-200	INC-10-225	INC-10-250	INC-10-300	
Dim. A : Stator / Rotor Body O.D.	n/a	n/a	n/a	125.00	150.00	175.00	200.00	225.00	250.00	300.00	mm
Dim. B : Pitch Circle Diameter	n/a	n/a	n/a	80.50	105.50	130.50	155.50	180.50	205.50	255.50	mm
Dim. C : Rotor I.D.	n/a	n/a	n/a	35.80	60.80	85.80	110.80	135.80	160.80	210.80	mm
Dim. D : Stator I.D.	n/a	n/a	n/a	35.80	60.80	85.80	110.80	135.80	160.80	210.80	mm
Dim E : Offset Angle from T.D.C.	n/a	n/a	n/a	30	30	30	30	30	20	20	degrees
N Number of screw clearance holes	n/a	n/a	n/a	4	6	6	6	6	8	8	
Max. radial misalignment	n/a	n/a	n/a	0.25							mm
Rotor & Stator fixings	n/a	n/a	n/a	Steel screws cap head M2.5 & steel dowels M3							

5.4 Duplex Format Product Option INC-10

Duplex IncOders can be installed in various ways and some examples are shown below. Provided the axial gap and concentricity tolerances are maintained, then the stated measurement performance will be met.

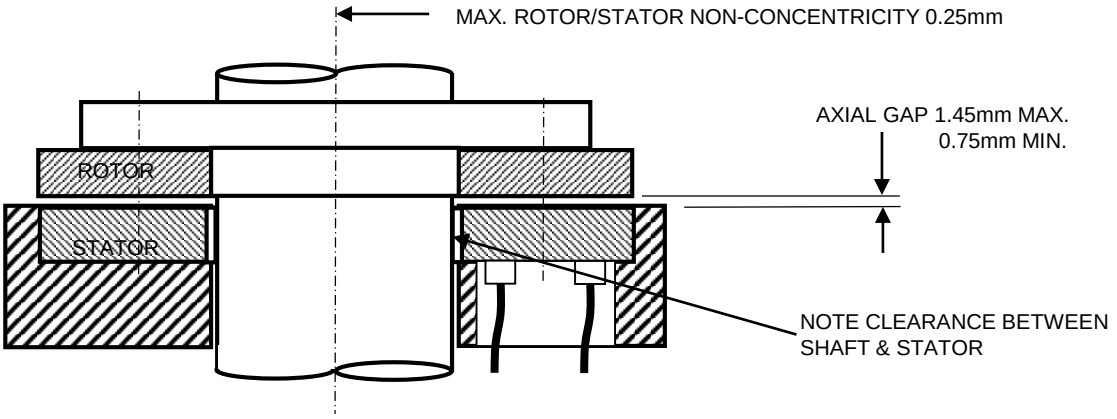

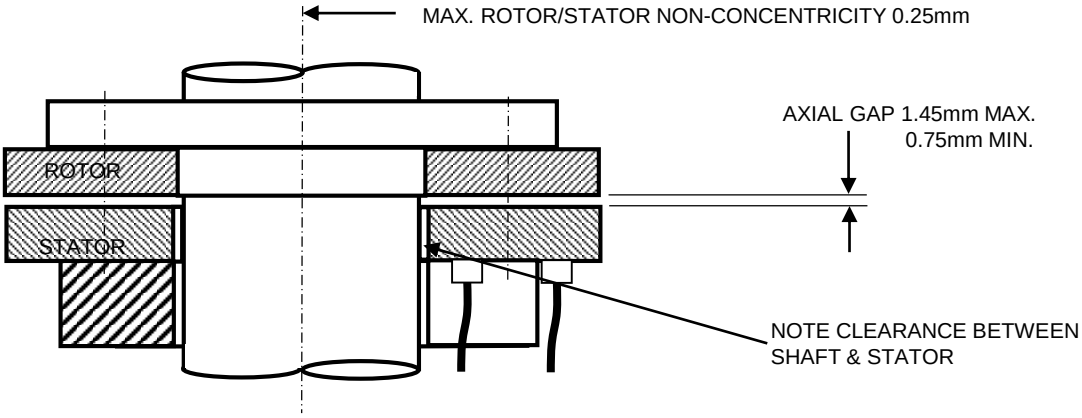

5.4.1 Part Numbering for Duplex IncOders

The default for Duplex (INC-10 format) IncOders is that the inner & outer devices have identical electrical interfaces.

A Duplex IncOder may be specified with differing electrical interfaces for the inner and outer devices. This is a requirement in some applications such as:

- an absolute encoder for a gearbox output shaft and a pulse encoder for the motor driven input shaft
- safety requirements for two different sensing technologies to avoid common failure modes.

If differing electrical interfaces are required, please specify the outer device using the standard Product Options as per Section 8 and add a note on electrical aspects (only) for the inner e.g., INC-10-250-141001-SSI1-AC1-12-AN OUTER with 141001-SSI3-AC1-24 INNER.

Note that the performance of the outer device will be as stated for any IncOder of the same (outer diameter) size and the performance of the inner device will be as stated as for the proportionately smaller device.

5.5 External Mount Stator & Screw Mount Rotor - Product Option INC-13

NOTES

1. **3D CAD IGES FILES AVAILABLE ON WWW.ZETTLEX.COM**
2. ALL DIMS IN mm – DO NOT SCALE
3. 3RD ANGLE PROJECTION
4. VIEW SHOWN WITH AXIAL CONNECTOR (AC1)
5. UNLESS STATED, TOLERANCES:-
   - 0 DECIMAL PLACES = ±0.5
   - 1 DECIMAL PLACES = ±0.2
   - 2 DECIMAL PLACES = ±0.1

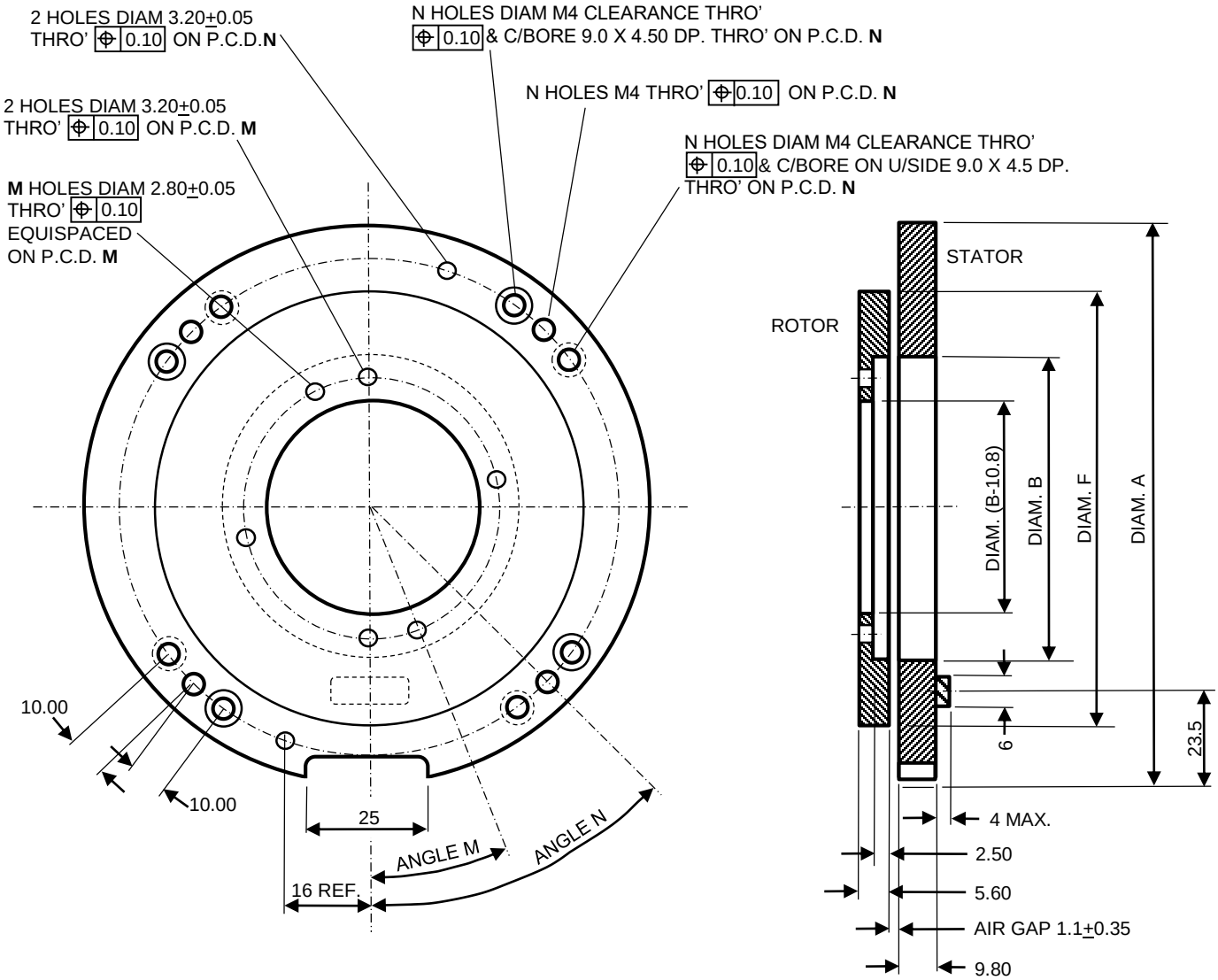

	INC-13-75	INC-13-90	INC-13-100	INC-13-125	INC-13-150	INC-13-175	INC-13-200	INC-13-225	INC-13-250	INC-13-300	
Dim. A : Stator O.D.	100.00	115.00	125.00	150.00	175.00	200.00	225.00	250.00	275.00	325.00	mm
Dim. B : Stator I.D. & Rotor Shoulder	35.80	40.80	60.80	85.80	110.80	135.80	160.80	185.80	210.80	260.80	mm
Dim. F : Rotor O.D.	75.00	90.00	100.00	125.00	150.00	175.00	200.00	225.00	250.00	300.00	mm
Angle N : Stator Offset Angle	45.0	60.0	45.0	45.0	30.0	30.0	30.0	30.0	22.5	22.5	degrees
N : Hole (sets) on Stator	4	4	4	4	6	6	6	6	8	8	
Dim. N : Stator P.C.D.	87.50	102.50	112.50	137.50	162.50	187.50	212.50	237.50	262.50	312.50	mm
Angle M : Rotor Offset Angle	30.00	30.00	30.00	30.00	30.00	30.00	30.00	30.00	20.00	20.00	degrees
Max. Radial Misalignment	0.25										mm
M Repeats	4	4	4	4	6	6	6	6	8	8	
Dim. M : Rotor P.C.D.	30.5	45.5	55.5	80.5	105.5	130.5	155.5	180.5	205.5	255.5	mm

5.5 External Mount Stator & Screw Mount Rotor - Product Option INC-13

External Mount Format IncOders can be installed in various ways and the following sketches show a few examples. Provided the axial gap and concentricity tolerances are maintained, then the stated measurement performance will be met.

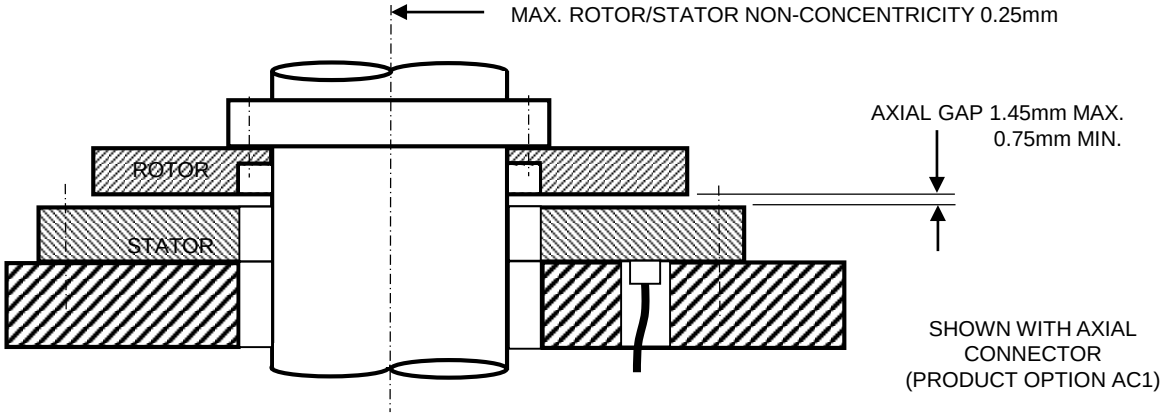

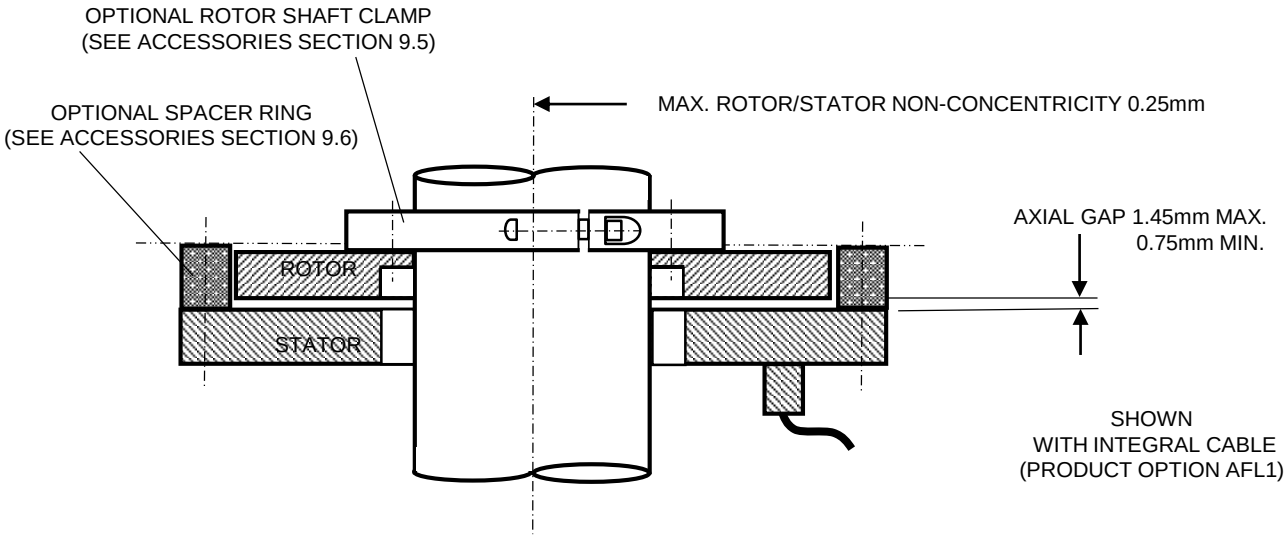

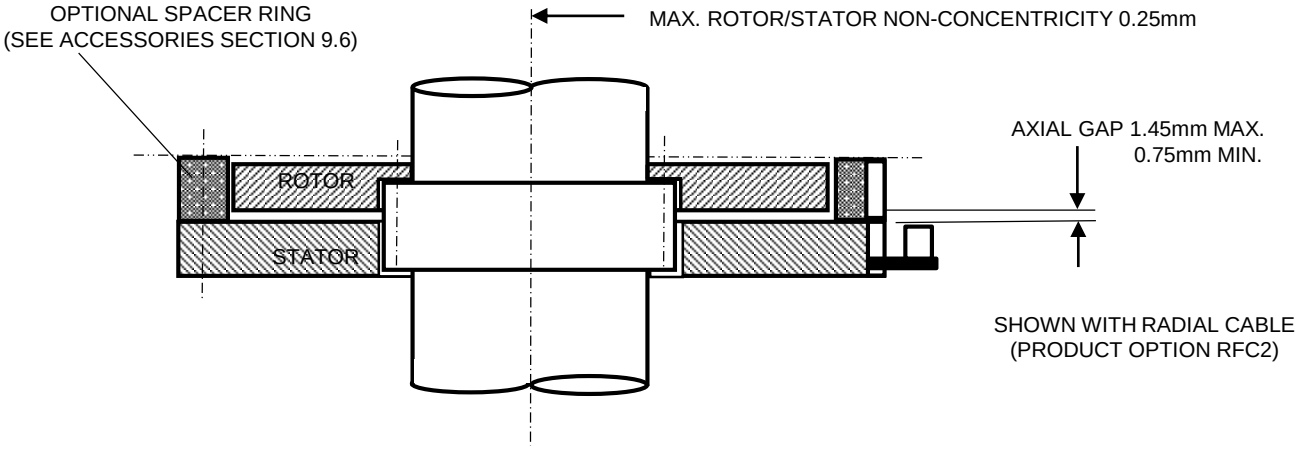

5.6 Mechanical Format Combinations

Stators and Rotors (of the same size) from different mechanical formats can be combined. The full list of formats and combinations is shown below:-

- **INC-3 Screw Mount Stator & Screw Mount Rotor**
- **INC-4 Servo Clamp Stator & Set Screw Rotor**
- **INC-6 Servo Clamp Stator & Plain Rotor**
- **INC-7 Screw Mount Stator & Set Screw Rotor**
- **INC-8 Screw Mount Stator & Plain Rotor**
- **INC-9 Servo Clamp Stator & Screw Mount Rotor**
- **INC-10 Duplex Stator & Duplex Rotor**
- **INC-13 External Mount Stator & Screw Mount Rotor**
- **INC-14 External Mount Stator & Plain Rotor**
- **INC-15 External Mount Stator & Set Screw Rotor.**

5.7 Custom Mechanical Formats

If a standard unit does not fit your design, a custom version may be needed. Zettlex make many custom housings and these are economical if unit volumes are >100 units/year. A few examples are shown below :-

To minimise tooling charges, the OD of Stator & Rotor should preferably be based on a standard size:- 75, 90, 100 etc. with a corresponding ID. Dimensions of Stator & Rotor should not be less than the dimensions shown below:-

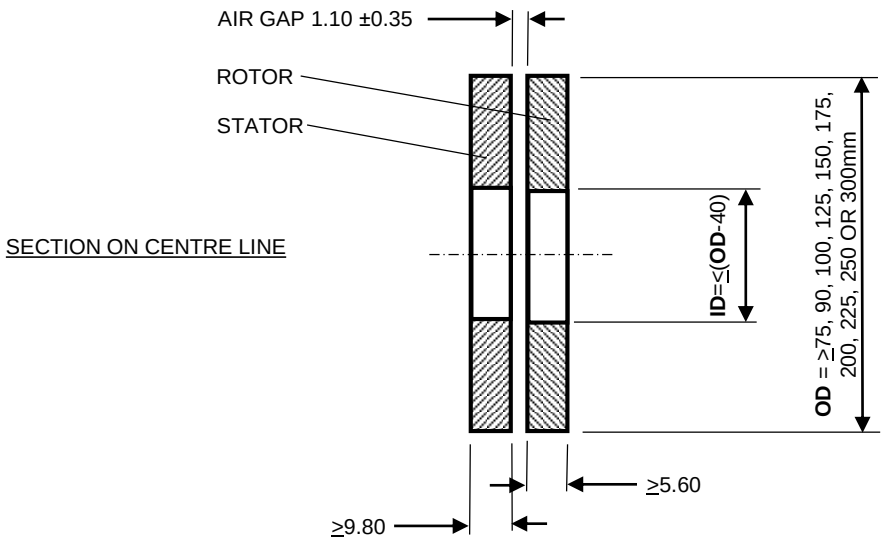

5.8 Radial Connections
Product Options RFC1 to RFC14

For IncOder sizes 75 to 300mm there are 14 options for radial output connection.

RFC1 – shown - vertical connector, 100mm long radial.
RFC11 – as RFC1 but connector on obverse.

RFC2 – shown - vertical connector, 12mm long radial.
RFC12 – as RFC2 but connector on obverse.

RFC3 – shown - 90 degree connector, 100mm long radial.
RFC13 – as RFC3 but connector on obverse.

RFC4 – shown - 90 degree connector, 12mm long radial.
RFC14 – as RFC4 but connector on obverse.

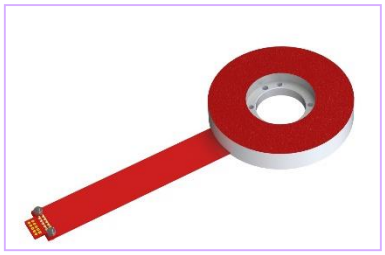

RFC5 – connector not fitted, plated through holes, 100mm long radial.
For customer fit of connector.

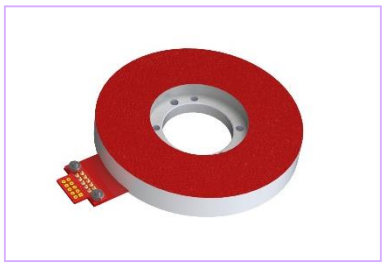

RFC6 – connector not fitted, plated through holes, 12mm long radial
For customer fit of connector.

5.8 Radial Connections
Product Options RFC1 to RFC14

Radial connection types RFC7 to RFC10 include a 2m cable which is connected to the radial output with a boot, connector and heat-shrink construction. The 2m long cable is the same specification and colouring as the cable used for integral axial connection AFL type (see Table A Section 5.9) for all electrical outputs. The cable has stripped and tinned ends.

RFC7 – 2m downward cable & 12mm long radial

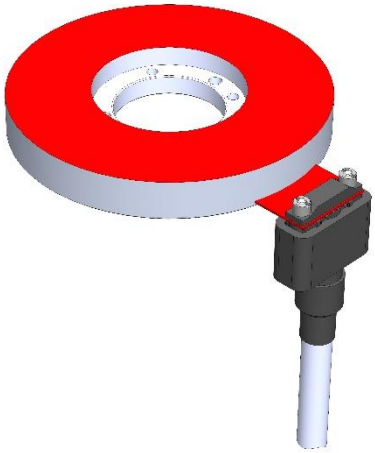

RFC8 – 2m upward cable & 12mm long radial

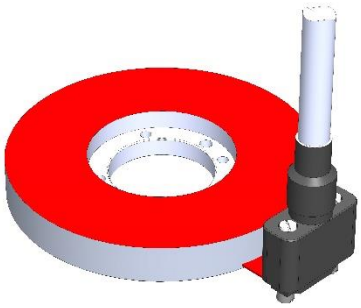

RFC9 – 2m downward cable & 100mm radial

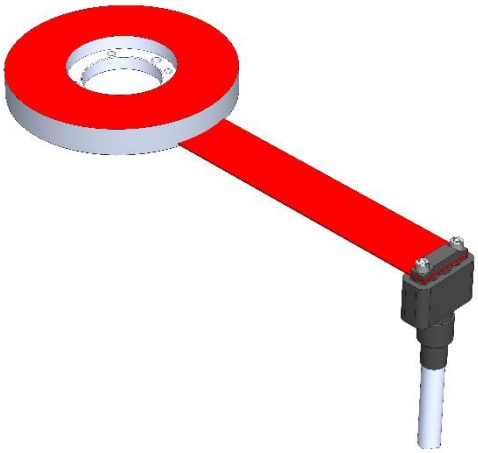

RFC10 – 2m upward cable & 100mm radial

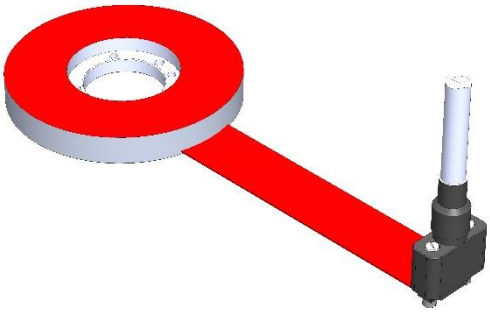

5.8 Radial Connection Dimensions
Product Options RFC1 to 14

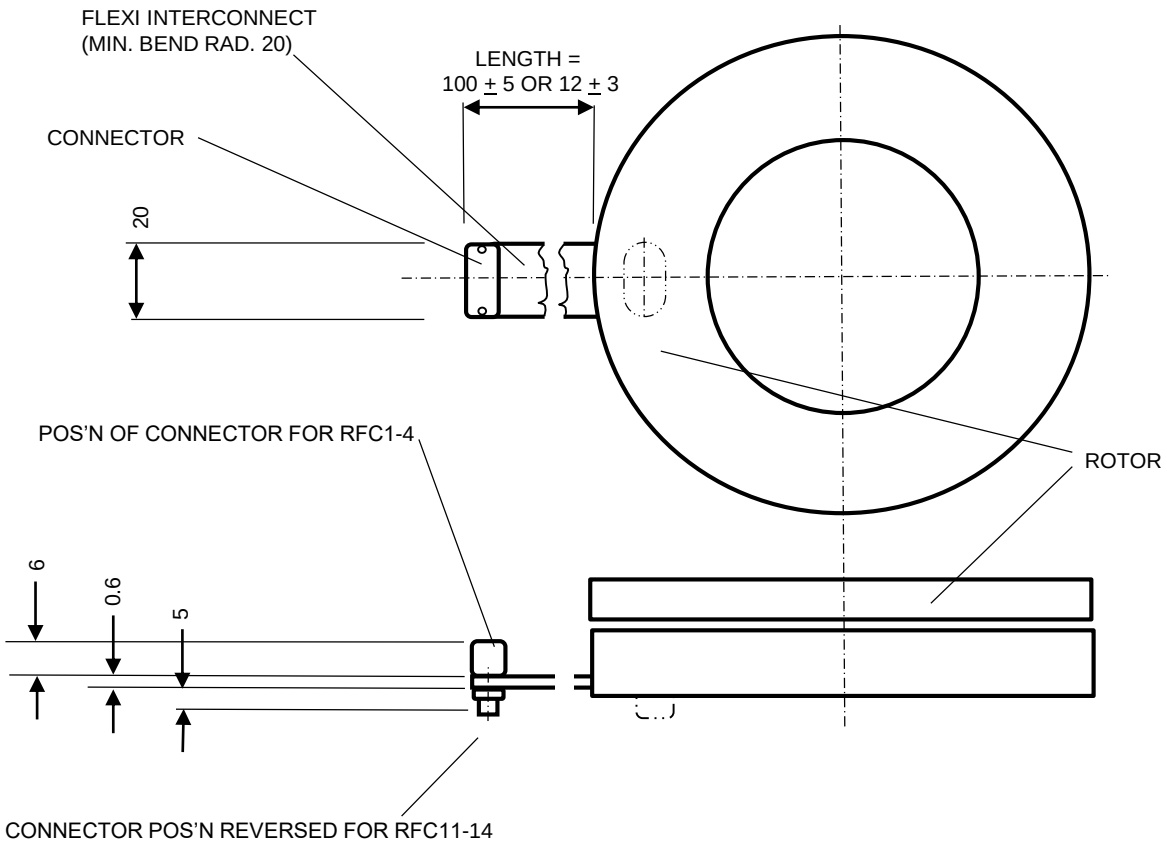

RFC1, 2, 11 & 12
VERTICAL CONNECTOR

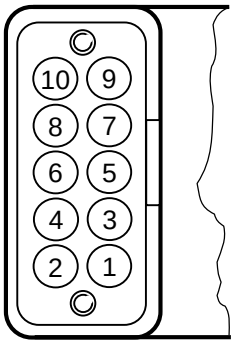

RFC3 & 4
90 DEGREE CONNECTOR

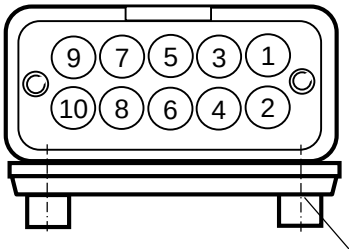

RFC13 & 14
90 DEGREE CONNECTOR

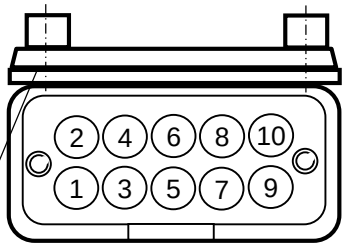

REMOVE THESE SCREWS ONLY IF ABSOLUTELY NECESSARY. IF REMOVED, ENSURE CONNECTIONS ON U/SIDE OF CONNECTOR ARE ALTERNATIVELY PROTECTED FROM CONTACTING CONDUCTIVE OR ABRADING SURFACES.

Notes

- See Section 7 for pin allocations of connectors shown above
- Drawing above is in 3rd angle projection. Do not scale from drawing. All dims in mm
- General tolerance = ±1mm unless stated
- In all instances, ensure that the weight (or inertia under shock or vibration) of the mating cable is taken by local strain relief and not the RFC connection.

5.8.1 Radial Connection Dimensions Product Options RFC5 & RFC6

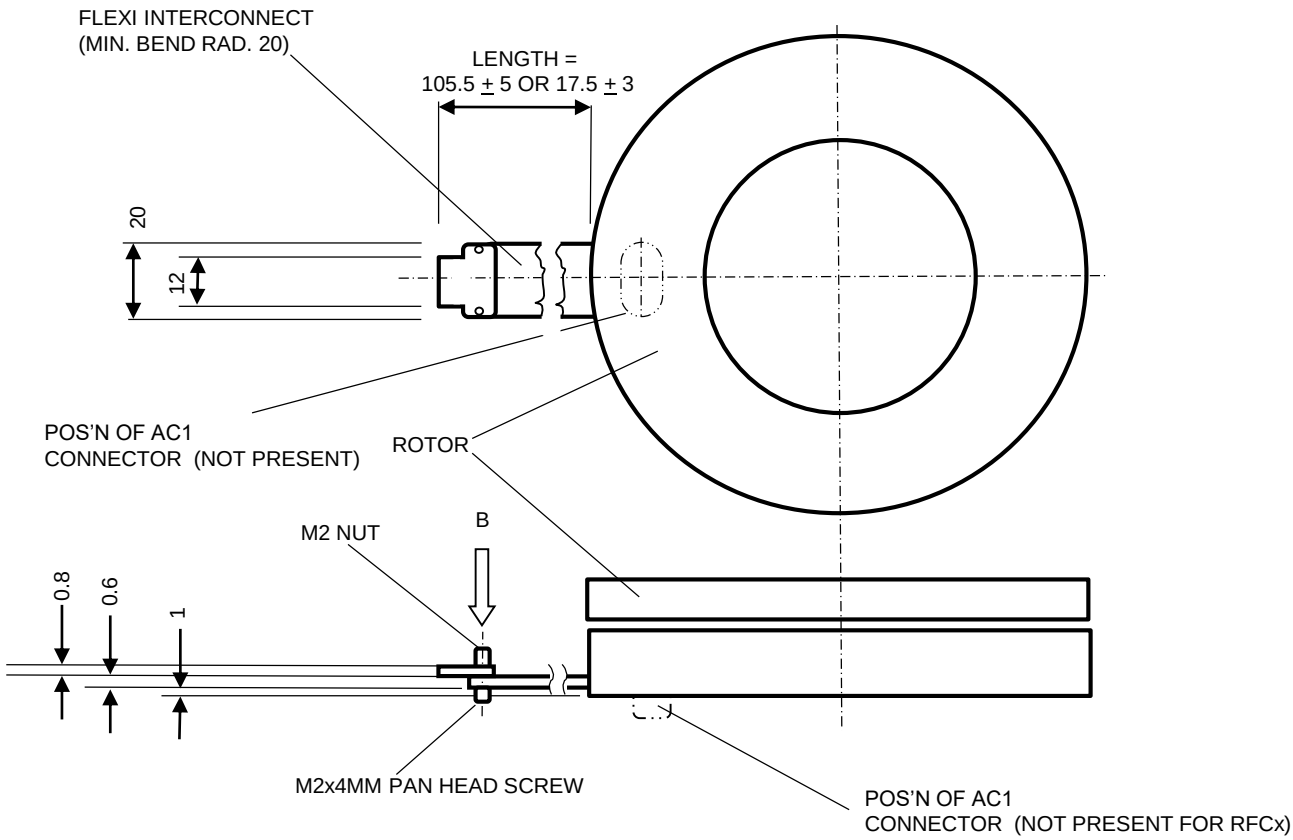

VIEW ON ARROW B
RFC5 & 6 - NO CONNECTOR FITTED
PLATED THRO' HOLES DIAM 0.7

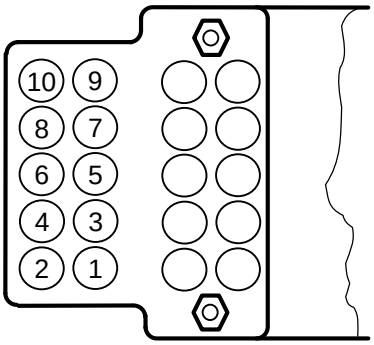

Notes

- Drawing above is in 3rd angle projection. Do not scale from drawing. All dims in mm
- General tolerance = ±1mm unless stated
- In all instances, ensure that the weight (or inertia under shock or vibration) of the mating cable is taken by local strain relief and not the RFC connection.

5.8.2 Radial Connection Dimensions Product Options RFC7 to RFC10

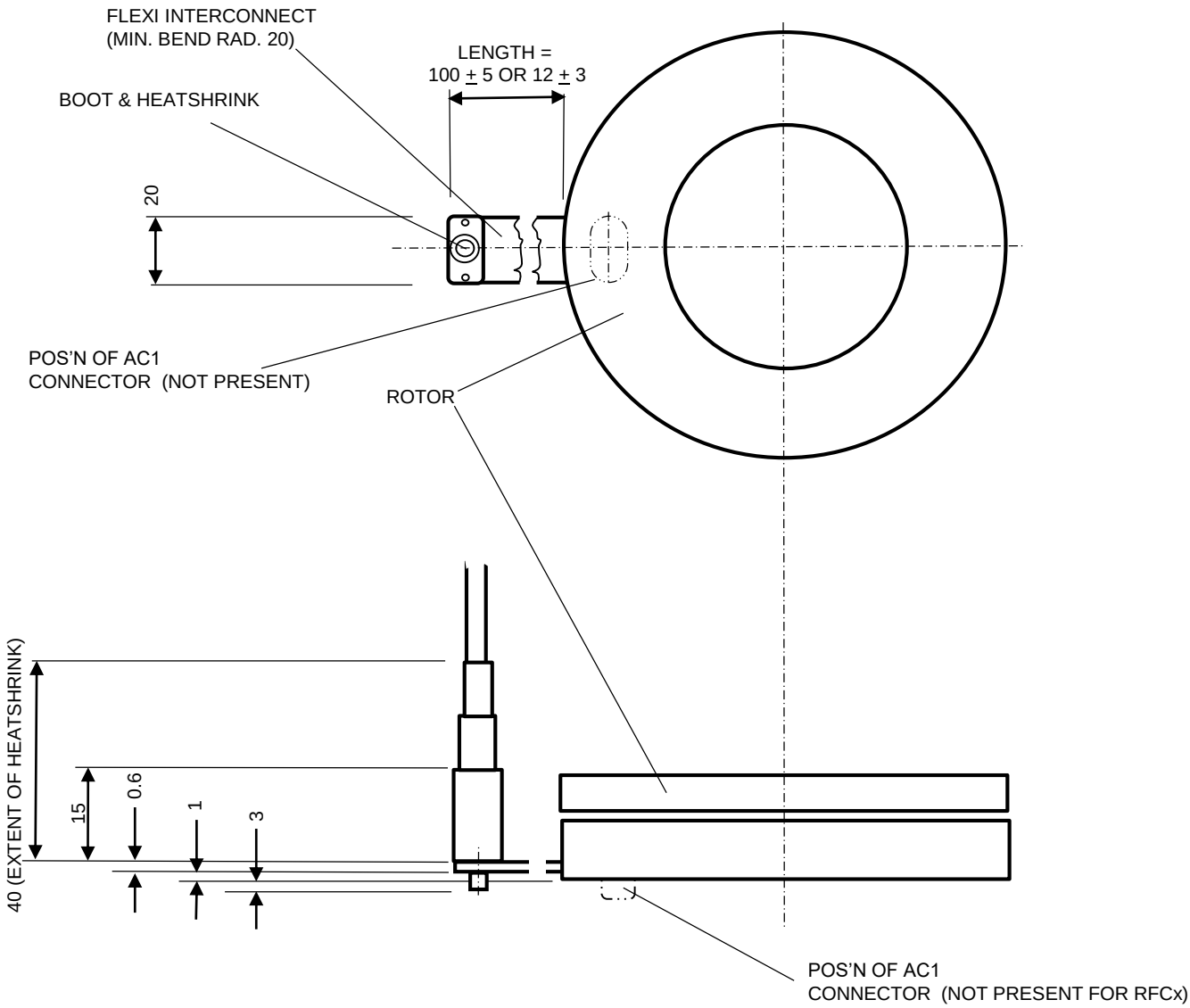

Notes

- See Table A in Section 5.9 for the wire and colour allocations
- Drawing above is in 3rd angle projection. Do not scale from drawing. All dims in mm.
- General tolerance = ±1mm unless stated
- In all instances, ensure that the weight (or inertia under shock or vibration) of the mating cable is taken by local strain relief and not the RFC connection.

5.9 Integral Axial Cable Product Options AFL1-52

Integral Axial Cables are for wet and/or severe shock/vibration environments. The connector is replaced by an integral cable and a block which covers the cable to IncOder joint.

- **AFL1 Integral Axial Cable.** IP67 for 1 hour & 1m depth. 2m long cable, 10-way, 24 AWG multi-strand copper wire, semi-rigid PVC insulation & outer jacket, twisted pairs, overall foil shield, tinned copper drain wire. Diam. 7.3mm. Min. flexing rad. = 76mm with a 1-off bend rad. (e.g. on installation) of 20mm. Operating temp.: -30 to 85ºC.
- **AFL2 Integral Axial Cable, Sealed Rotor & Stator.** IP68 to 100m depth. Cable as per AFL1.
- **AFL3 Integral Axial, High Flex Cable.** IP67 for 1 hour & 1m depth and suitable for repeat bending (>5M cycles). IGUS CF11.02.05.02 cable, 2m long, TPE outer jacket, shielded, twisted pairs, 24AWG multi-strand, copper wire, PVC & halogen free. Hydrolysis, oil, UV & microbe resistant. Diam. 9.0mm. Min. radius 45mm (fixed) & 61mm (flexing). Operating temp.: -35 to +85°C (flexing) or -40 to +85°C (fixed). Operating temps. limited by IncOder, not cable.
- **AFL32 Integral Axial, High Flex Cable, Sealed Rotor & Stator.** IP68 to 100m depth. Cable as per AFL3.
- **AFL4 Integral Axial Cable, Low Profile.** IP67 for 1 hour & 1m depth. 0.6m long cable with individual Brand-Rex SPC00443A00x PTFE coated 24AWG multi-strand, copper wire, in twisted pairs, to BS 3G 210. No shielding or outer sheath. Specify this option if space is tight. Axial length of the plastic cover block is shorter than other AFL options and min. bend radius of wires is 20mm with a 1 off min. bend radius. (e.g. on installation) of 10mm. Cables must not be substantially axially loaded (0.5kg max.) or strained during handling, installation or use. This option is not recommended for high shock or vibration unless cable is strain relieved locally. Operating temp.: -60 to +85ºC (limited by IncOder, not cable).
- **AFL42 Integral Axial Cable, Low Profile, Sealed Rotor & Stator.** IP68 to 100m. Cable as per AFL4.
- **AFL5 Integral Axial, PTFE/MIL-Spec Cable**. IP67 for 1 hour & 1m depth. 1.1m cable with individual Brand-Rex SPC00443A00x PTFE coated 24AWG multi-strand, copper wire, twisted pairs, to BS 3G 210, in overall Raychem RAY101-3.0 braided screen. Pro-Power STFE4-6.4-1.2MNAT PTFE outer sleeve. This non-flammable cable is resistant to oils, lubricants, fuels and is flexible. Min. flex rad. of 76mm with 1 off bend rad. (e.g. on installation) of 8mm. Operating temp.: -60 to +105ºC (limited by IncOder, not cable).
- **AFL52 Integral Axial, PTFE/MIL-Spec Cable, Sealed Rotor & Stator**. IP68 to 100m. Cable as per AFL5.

AFL Dimensions for 75 to 300mm

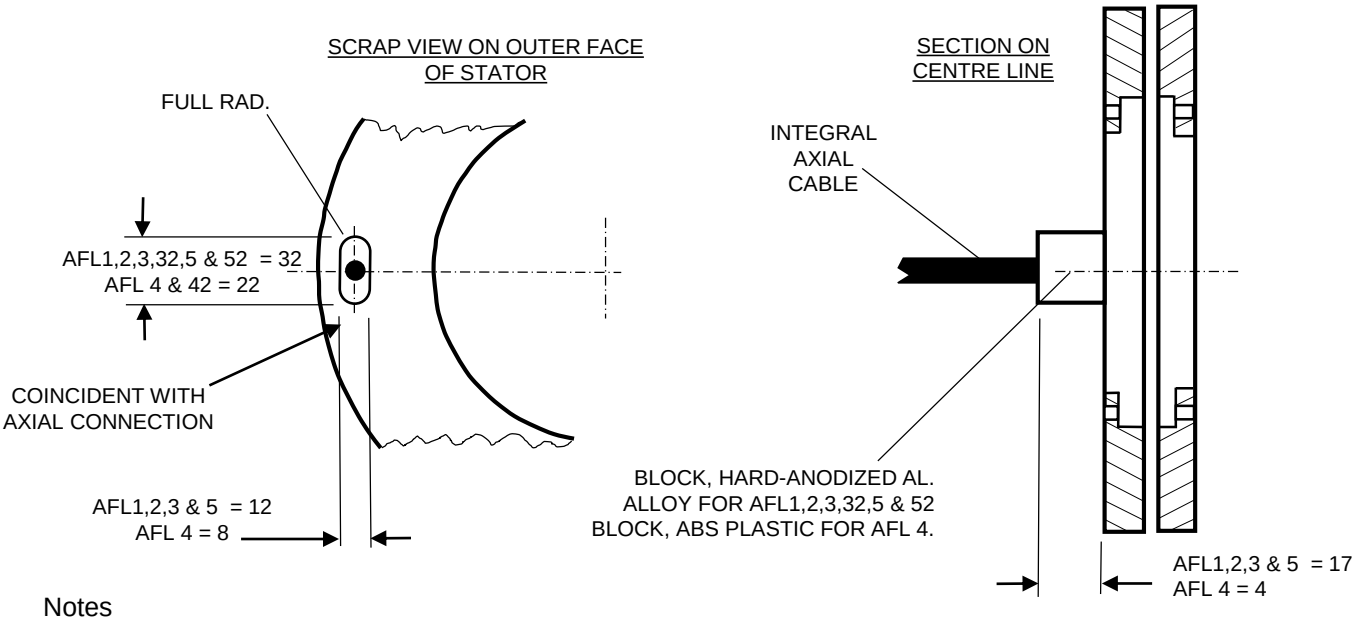

Notes

- Drawing shown in 3rd angle projection. Do not scale from drawing
- All dims in mm. Gen. tol. = ±1mm unless stated - all other dims as per relevant mechanical drawings.

5.9 Integral Axial Cable Product Options AFL1-52

Table A - Connections for AFL1, AFL2, AFL4, AFL42, AFL5, AFL52 (& RFC6-10)

Pair No.	Colour	Connector Pin (For Info. Only)	Signal (SSI1-9 & SPI & BISS-C)	Signal (ASI1 & ASI2)	Signal (0-10V)	Signal (A/B pulses & Z Ref.)
1	Black	7	Data B	Data B	Ref. Voltage	A complement
1	Green	5	Data A	Data A	Signal	A
2	Black	6	Clk B	Not used - do not connect	Direction Set	B complement
2	Blue	8	Clk A	Not used - do not connect	Span Set	B
3	Black	9	0V	0V	0V	0V
3	Red	10	V_{supply}	V_{supply}	V_{supply}	V_{supply}
4	Black	1	Zero Set	Zero Set	Zero Set	Z Ref Set
4	Yellow	2	Zero Reset	Zero Reset	Zero Reset	Z Ref. Reset
5	Black	3	Not used - do not connect	Not used - do not connect	Not used - do not connect	Z
5	White	4	Not used - do not connect	Not used - do not connect	Not used - do not connect	Z complement

Table B - Wiring connections for AFL3, AFL32

Pair No.	Colour	Connector Pin (For Info. Only)	Signal (SSI1-9 & SPI & BISS-C)	Signal (ASI1 & ASI2)	Signal (0-10V)	Signal (A/B pulses & Z Ref.)
1	Grey	7	Data B	Data B	Ref. Voltage	A complement
1	Pink	5	Data A	Data A	Signal	A
2	Yellow	6	Clk B	Not used - do not connect	Direction Set	B complement
2	Green	8	Clk A	Not used - do not connect	Span Set	B
3	Blue	9	0V	0V	0V	0V
3	Red	10	V_{supply}	V_{supply}	V_{supply}	V_{supply}
4	Violet	1	Zero Set	Zero Set	Zero Set	Z Ref Set
4	Black	2	Zero Reset	Zero Reset	Zero Reset	Z Ref. Reset
5	Brown	3	Not used - do not connect	Not used - do not connect	Not used - do not connect	Z
5	White	4	Not used - do not connect	Not used - do not connect	Not used - do not connect	Z complement

Cable Lengths for AFL Product Options

Standard length for AFL1, AFL2, AFL3 & AFL32 cables is 2m. Standard cable length for AFL4 & AFL42 is 0.6m. Standard length for AFL5 & AFL52 is 1.1m. If a different cable length is required, simply change the part number from, for example, AFL1 to AFL1.5.0 for a 5.0m cable or from AFL32 to a AFL32.0.9 for a 0.9m cable. For shorter cables there is no price difference. There may be a price variation for integral cables longer than standard – contact Zettlex or your local rep. General tolerance on cable lengths is ±50mm.

Connectors for AFL & VFL Product Options

Fitting special connectors such as D-38999 military type or hermetically sealed connectors is something that Zettlex is frequently asked to do. Please contact Zettlex or your local representative if this is a requirement, stating cable type (preferably choose from cables described in Section 5.9), cable length & connector type.

5.10 Extended Product Range

Extended Product Range Options are not necessary for most applications. In some, such as ultra high-spec applications in defence, aerospace and extreme duty industrial applications, Extended Product Options may be required. Extended Product Options increase product costs & lead-times and should only be specified if necessary.

Electronics with Leaded Solder – Extended Product Option 'P'

Standard IncOders use RoHS compliant solder for electronic components. In some applications, notably space, the use of leaded solder is mandatory. Specify 'P' at the end of the standard Product Number.

Extended Thermal Stress Screen/Bake-Off – Extended Product Option 'B'

Standard IncOders undergo a rigorous final test after assembly. In some applications, extended thermal stress screening (or 'burn-in') is required. Similarly, some applications require eradication of any volatile organic compounds. An extended thermal stress screen / bake-out for 24 hours at 70ºC prior to final testing may be specified. Specify 'B' at the end of the standard Product Number.

Very High Shock & Vibration – Extended Product Option 'G'

Standard IncOders are designed for high shock & vibration environments, often found in airborne, marine & military vehicles. In applications with prolonged, very high shock (to 500g for 11ms) and/or very high vibration environments (to 100g for 10-2000Hz) the Very High Shock & Vibration Product Option should be specified. Example applications include (direct mounted) weapons systems, wing mounted aerospace equipment and earth moving vehicles. This option is available in all IncOder sizes, formats and electrical interfaces but, preferably, should be used with integral cables (type AFL1, 2, 3 or 5). 'G' format IncOders have a reinforced internal structure. External mechanical & electrical interfaces are unchanged. Local strain relief of cables must be used in all applications with shock or vibration. Specify 'G' at the end of the standard Product Number.

Engraved Data – Extended Product Option 'E'

Standard IncOder Stators carry a serial number on a self-adhesive, metallised label. In some applications, a label is not acceptable and product data must be engraved. Engraved data includes part number & serial number on exterior faces of housing. Specify 'E' at the end of the standard Product Number.

SurTec 650 Surface Finish – Extended Product Option 'S'

SurTec650 is standard finish on 37mm and 58mm IncOders. The aluminium alloy housings for Midi and Maxi IncOder have a clear, hard-anodized surface finish with low electrical conductivity. In some applications, housings must be electrically conductive to the host. SurTec650 ChromitAL® TCP is an alternative, electrically-conductive surface finish with a bluish-gold colour. It does not contain hexavalent chromium; is REACH compliant and has excellent corrosion protection. It meets or exceeds MIL-DTL-81706B & MIL-DTL-5541F (336h in NSS per ASTM B-117, respectively, DIN EN ISO 9227). It has a low electrical contact resistance (<5000µOhm per square inch as per MIL-DTL-81706B). Specify 'S' at the end of the standard Product Number.

Cold Temperature Option – Extended Product Option '12CT' or '24CT'

Standard IncOders have a lower operating temperature limit of -45ºC. For prolonged or frequent operation at temperatures <-45ºC, a cold temperature version (lower operating temperature of -60ºC) should be specified using the 12CT or 24CT Extended Product Option in the voltage supply section of the part number. For operating temperatures <-60ºC consult Zettlex.

5.10 Extended Product Range

High Temperature Option – Extended Product Option '5HT'
Standard IncOders have an upper operating temperature limit of +85ºC. For prolonged or frequent operation at temperatures >85ºC, a high temperature version (upper operating temperature of +105ºC) should be specified using the 5HT Extended Product Option in the voltage supply section of the part number. Only available with SSI1-9, SPI, ASI1-2 & BiSS-C communications. Careful selection of the appropriate cable is required for high operating temperatures. Generally, the high temperature cable INC-CAB3-2HT (see Section 9.1) should be specified or the AFL5/ALF52 integral cable. For operating temperatures >105ºC consult Zettlex.

Prolonged Immersion, Salt Spray or Extreme Dust Conditions – Extended Product Option 'C'
Standard IncOders will operate reliably if subject to moist, wet, dusty or salt spray conditions for short or infrequent periods. Such conditions include immersion in mineral oil or water – depending on cable connection selected. If the IncOder will be subject to prolonged periods of high levels of condensing moisture, immersion in water, exposure to salt atmospheres or potential abrasion by dust or grit then Extended Product Option C is recommended. This option provides additional protection to the IncOder's sensing faces using an acrylic conformal coat. This option is not required if immersion is in mineral oil. This option is not required (because it is already included) if a sealed version of integral axial cable is selected e.g. AFL2, AFL32, AFL42 or AFL52. Specify 'C' at the end of the standard Product Number.

High Pressure Option – Extended Product Option 'V'
If operation at high pressures is needed (for example, sub-sea equipment submerged in mineral oil) then the use of Extended Range Product Option 'V' is recommended. Maximum recommended operating pressure is 4,000psi or 280Bar. Higher operating pressures may be possible subject to qualification by the user in host equipment. 'V' designated products undergo a hard epoxy encapsulation process which ensures absence of internal voids. Specify 'V' at the end of the standard Product Number.

5.11 Measurement & Electrical Data

Measurement & Elec. Data for all Digital Comms Interfaces - Product Options SSI1-9, SPI, ASI1, ASI2 & BiSS-C

	INC-x-75	INC-x-90	INC-x-100	INC-x-125	INC-x-150	INC-x-175	INC-x-200	INC-x-225	INC-x-250	INC-x-300	
Measurement	Absolute over 360degrees. Note this is true absolute - no motion required at start up										
Resolution (101001 Product Option)	10bits 1,024counts per rev 1265.6arc-secs 6144micro-rads										
Resolution (121001 Product Option)	12bits 4,096counts per rev 316.4arc-secs 1536micro-rads										
Resolution (141001 Product Option)	14bits 16,384counts per rev 79.1arc-secs 384micro-rads										
Resolution (161001 Product Option)	16bits 65,536counts per rev 19.77arc-secs 96micro-rads										
Resolution (181001 Product Option)	18bits 262,144counts per rev 4.94arc-secs 24micro-rads										
Resolution (191001 Product Option)	19bits 524,288counts per rev 2.47arc-secs 12micro-rads										
Resolution (201001 Product Option)	20bits 1,048,576counts per rev 1.24arc-secs 6micro-rads										
Resolution (211001 Product Option)	21bits 2,097,152counts per rev 0.62arc-secs 3micro-rads										
Resolution (221001 Product Option)	n/a	n/a	n/a	n/a	22bits 4,194,304counts per rev 0.31arc-secs 1.5micro-rads						
Repeatability	+/-1										count
Static Accuracy over 360°	≤125	≤98	≤80	≤65	≤50	≤50	≤50	≤45	≤40	≤38	arc-seconds
Static Accuracy over 360°	≤0.61	≤0.48	≤0.39	≤0.32	≤0.24	≤0.24	≤0.24	≤0.22	≤0.20	≤0.19	milliradians
Internal Position Update Period	<0.1										millisecond
Thermal Drift Coefficient	≤0.50										ppm/K Full-Scale
Max. Speed for Angle Measurement	9,000	7,200	7,200	5,760	4,965	4,500	4,500	4,500	4,500	4,500	r.p.m.
Max. Physical Speed	10,000										r.p.m.
Data Outputs	RS422 Compatible, supports SSI (Serial Synchronous Interface), asynchronous serial interface, SPI or BiSS-C										
Power Supply	5VDC(4.5-32VDC) or 12VDC (4.5-32VDC) or 24VDC (4.5-32VDC)										VDC
Current Consumption	<100 (typically <75 and does not change significantly with voltage supply)										milliAmp
Reverse Polarity	PSU Reverse polarity protected to max. supply voltage										VDC
Connector (AC1 & RFCx Product Options)	Harwin Data Mate Vertical Plug 10 Way with 2 Jack Screws Type M80-500-10-42 or M80-510-10-42 or M80-540-10-42 For alternative connectors such as integral cable or military shell type contact Zettlex										
Mating Connector (AC1 & RFCx)	Harwin Data Mate Vertical Socket Type M80-461-10-42 (alternative M80-461-10-05)										
Zero Setting	Via Connector Pin or Integral Cable - see details for set and reset in relevant Section for Connector, Cable or Comms Interface										
Power Up Time To 1st Measurement	<100										millisecond

Measurement & Electrical Data for A/B/Z Pulses Comms Interfaces - Product Option ABZ1-6

	INC-x-75	INC-x-90	INC-x-100	INC-x-125	INC-x-150	INC-x-175	INC-x-200	INC-x-225	INC-x-250	INC-x-300	
Measurement	Incremental with reference mark. Position of reference mark programmable by user.										
Resolution (101001 Product Option)	10bits 1,024counts per rev 1265.6arc-seconds 6144micro-radians 256pulses per rev										
Resolution (121001 Product Option)	12bits 4,096counts per rev 316.4arc-seconds 1536micro-radians 1024pulses per rev										
Resolution (141001 Product Option)	14bits 16,384counts per rev 79.1arc-seconds 384micro-radians 4,096pulses per rev										
Resolution (161001 Product Option)	16bits 65,536counts per rev 19.77arc-seconds 96micro-radians 16,384pulses per rev										
Resolution (181001 Product Option)	18bits 262,144counts per rev 4.94arc-seconds 24micro-radians 65,536pulses per rev										
Resolution (191001 Product Option)	19bits 524,288counts per rev 2.47arc-seconds 12micro-radians 131,072pulses per rev										
Repeatability	+/-1										count
Static Accuracy over 360°	≤125	≤98	≤80	≤65	≤50	≤50	≤50	≤45	≤40	≤38	arc-seconds
Static Accuracy over 360°	≤0.61	≤0.48	≤0.39	≤0.32	≤0.24	≤0.24	≤0.24	≤0.22	≤0.20	≤0.19	milliradians
Internal Position Update Period	<0.1										millisecond
Thermal Drift Coefficient	≤1										ppm/K Full-Scale
Max. Speed for Angle Measurement	10, 12 or 14bits = 6,000r.p.m. 16bits = 3,600r.p.m. 18bits = 900r.p.m. 19bits = 450r.p.m.										
Max. Physical Speed	10,000										r.p.m.
Data Outputs	A/B pulses with Z pulse ref. Z position settable from connector/cable. Z pulse width selectable by Product Option/ Part Number.										
Power Supply	5VDC±10% or 12VDC (8-32VDC) or 24VDC (8-32VDC)										VDC
Current Consumption	<150 (does not vary significantly with supply voltage)										milliAmp
Reverse Polarity	PSU Reverse polarity protected to max. supply voltage										VDC
Connector (AC1 & RFCx Product Options)	Harwin Data Mate Vertical Plug 10 Way, Jack Screw Sockets Type M80-500-10-42 or M80-510-10-42 or M80-540-10-42 For alternative connectors such as integral cable or military shell type contact Zettlex										
Mating Connector (AC1 & RFCx)	Harwin Data Mate Vertical Socket Type M80-461-10-42 (alternative M80-461-10-05)										
Z Position Setting	Via Connector Pin or Integral Cable - see details for set and reset in relevant Section for Connector, Cable or Comms Interface										
Power Up Time To 1st Measurement	<120										millisecond

5.11 Measurement & Electrical Data

Measurement & Electrical Data for Analogue Voltage Comms Interfaces - Product Options V0360, W3601 etc.

	INC-x-75	INC-x-90	INC-x-100	INC-x-125	INC-x-150	INC-x-175	INC-x-200	INC-x-225	INC-x-250	INC-x-300	
Span (Product Option -0360)	360° measured clockwise										
Default setting unless specified	*If required range is other than a factory ranges - use this code and set requirements at installation using set/reset*										
Span (Product Option -3601)	360° measured counter-clockwise										
Span (Product Option -0270)	270° measured clockwise.										
Span (Product Option -2701)	270° measured counter-clockwise										
Span (Product Option -0180)	180° measured clockwise										
Span (Product Option -1801)	180° measured counter-clockwise										
Span (Product Option -0090)	90° measured clockwise										
Span (Product Option -0901)	90° measured counter-clockwise										
Resolution (Product Option 141001)	≤0.0061% of Span (in Spans of 45 to 360°) ≥16384steps over Span (in Spans of 45 to 360°)										
Repeatability	≤0.0061% of Span (in Spans of 45 to 360°) ±1step over Span (in Spans of 45 to 360°)										
Linearity over Full-Scale	≤0.05	≤0.05	≤0.05	≤0.05	≤0.05	≤0.05	≤0.05	≤0.05	≤0.05	≤0.05	% of 10V
Position Update Period	≤1.0										millisecond
Thermal Drift Coefficient	≤70										ppm/K full-scale
Max. Physical Speed	10,000										r.p.m.
Output Signal	0.5 to 4.5VDC 0.5 to 5.0VDC 0.5 to 9.5VDC 0.5 to 10.0VDC										
Output Load	5kOhm min.										
Power Supply	11.5 to 32										VDC
Current Consumption	<100 (typically 75 and does not change significantly with voltage supply)										milliAmp
Reverse Polarity	PSU Reverse polarity protected to max. supply voltage										VDC
Connector (AC1 & RFCx Product Options)	Harwin Data Mate Vertical Plug 10 Way, Jack Screw Sockets Type M80-500-10-42; M80-510-10-42 or M80-540-10-42. For alternative connectors such as integral cable or military shell type contact Zettlex										
Mating Connector	Harwin Data Mate Vertical Socket Type M80-461-10-42 (alternative M80-461-10-05)										
Zero, Direction & Span Setting	Via Connector Pin or Integral Cable - see details for set and reset in relevant Section for Connector, Cable or Comms Interface										
Power Up Time To 1st Measurement	<100										millisecond

5.12 Environmental & Further Data

Environmental Data - All Product Options

	INC-x-75	INC-x-90	INC-x-100	INC-x-125	INC-x-150	INC-x-175	INC-x-200	INC-x-225	INC-x-250	INC-x-300	
Operating Temp.	Minus 45 to +85 Minus 60 to +85Celsius for 12VCT & 24VCT Product Option. Minus45 to +105Celsius max. for 5HT Product Option Operation outside limits to be qualified by user. Options available below minus 60 Celsius operation: contact Zettlex or local representative.										Celsius
Storage Temp.	Minus 55 to +125 (Minus60 to +125 for 24CT Product Option)										Celsius
Temperature Shock:	MIL-STD-810G, Method 503.5, Procedure I-B (T1=-40 °C, T2=55 °C.)										
IP Rating - Rotor & Stator	IP67 for <60 minutes & 1m depth (Installed with mechanically protected connector or AFL1, AFL3, AFL4 or AFL5 Product Options) IP68 100m depth (Installed with mechanically protected connector or AFL2, AFL32, AFL42 or AFL52 Product Option) For immersion at depths of >100m select Extended Range High Pressure Option										
IP Rating - Connector	IP50 (AC1 or RFC1-5 & RFC11-14 Product Option). IP68 for RFC6-10. See Section 5.9 for IP rating of AFLx Product Option										
Humidity	RH 0-99% as standard. Select Extended Range Option C & appropriate connector for condensing humidity or long immersion										
Salt Fog	(Installed with protected cable/connector or any integral axial cable) Complies with DEF STAN 00-35 Pt. 3 Iss. 4, Test CN2 Salt Mist Test. Select Extended Range Option C and appropriate connector for environments with significant exposure to salt fog										
Bio Hazards	nstalled with protected cable/connector or any integral axial cable) Complies with DEF-STAN 00-35 Pt. 4 Iss. 4 Section 11 (Hazards										
Induced Dust & Sand	Complies with DEF STAN 00-35 Pt 3 Iss 4, Test CL25 (Turbulent Dust) Cat 1. Select Extended Range Option C and appropriate connector for environments with abrasive dust or sand.										
Mechanical Impact Resistance	IK07 - when installed - *suitable for mechanical impacts from objects of >200grams from 1m height*										
Shock	IEC 60068-2-27 100g for 11ms - axial & radial - *suitable for most airborne, marine & armoured vehicles* MIL-STD-810G, Method 516.6, Procedure I-Functional Shock - axial and radial - 40 g 11 ms, sawtooth waveform For more extreme or prolonged conditions specify Extended Product Option G and preferably Integral Axial Cable Product Options										
Vibration	IEC 60068-2-6 20g for 10-2000Hz - axial and radial - *suitable for most high vibration & airborne environments* MIL-STD-810G, Method 514.6, Procedure I - axial and radial - Category 20, for tracked vehicles For more extreme or prolonged conditions specify Extended Product Option G and preferably Integral Axial Cable Product Options										
Environmental pressure range	0 to 7 *(i.e. vacuum to 7). See Extended Product Range High Pressure Option for higher operating pressures*										Bar
Max. permissible press. change rate	1										Bar/second
EMC Radiation Susceptibility	(Installed) Complies with IEC 61000-6-2 - *suitable for fitment in harsh EMC environments*										
EMC Radiated Emissions	(Installed) Complies with IEC 61000-6-4 - *suitable for fitment adjacent to EMI sensitive devices*										
Materials - all Product Options											
Rotor & Stator Housings	Standard range:- Hard, clear anodized al. alloy (6061-T6 or 6084-T6). Sensor surfaces: FR4 grade epoxy Product Option A or S:- Alocrom or SurTec650 finish al. alloy (6061-T6 or 6084-T6). Sensor surfaces: FR4 grade epoxy										
Connector (Axial - AC1 Product Option)	PPS with Stainless Steel Screw Fixings and Gold & Tin Electrical Connections										
Connector (Radial - RFCx Product Option)	PPS with St. Steel Screw Fixings and Gold & Tin Electrical Connections and Polyimide Flexi with Polyimide Coverlay										
Connector (Integral Axial Cable)	See Section 5.9										
Miscellaneous - all Product Options											
Mass Screw Mount Rotor (max.)	50	60	70	90	110	130	150	170	192	235	grams
Mass Set-Screw Rotor (max.)	75	90	105	135	165	195	225	255	287	350	grams
Mass Plain Rotor (max.)	45	55	63	81	99	117	135	153	172	215	grams
Mass Screw Mount Stator (AC1)	83	108	117	150	184	217	250	284	319	390	grams
Mass Servo Clamp Stator (AC1)	79	103	111	143	174	206	238	270	303	360	grams
Mom. of Inertia Screw Mount Rotor (max.)	4.8E-05	1.0E-04	1.3E-04	2.5E-04	4.4E-04	7.5E-04	1.2E-03	1.8E-03	2.5E-03	4.5E-03	Kgm^2
Mom. of Inertia Set-Screw Rotor (max.)	7.2E-05	1.4E-04	1.9E-04	3.7E-04	6.6E-04	1.1E-03	1.8E-03	2.7E-03	3.8E-03	6.7E-03	Kgm^2
Mom. of Inertia Plain Rotor (max.)	4.3E-05	9.0E-05	1.2E-04	2.2E-04	3.9E-04	6.8E-04	1.1E-03	1.6E-03	2.3E-03	4.4E-03	Kgm^2
MTBF	0.22 failures per 1M hours based on MIL-HBK-217+ method for ground military vehicles at 20Celsius average										
MTBF	0.35 failures per 1M hours based on MIL-HBK-217+ method for naval sheltered at 35Celsius average										
Hazardous materials	Standard range - Hazardous materials not used. RoHS compliant. RoHS certificate available. REACH statement available.										
Outgassing materials	Complies with NASA class'n as low outgas matl. with TML <1% & CVCM <0.1% at 125C & 24hrs in vacuum to ASTM E-595-90										
ITAR classification	Not ITAR controlled. No ITAR components										
Approvals	Flammability Rating UL94V-0. Standard range - RoHS compliant - RoHS certificate available. REACH statement available.										
Marking	Zettlex, logo, CE & UL94V-0 printed on Rotor & Stator faces; Serial No. labelled on exterior diameter of Stator housing Extended Product Range Option E - engraved serial number and part number on exterior faces of Stator & Rotor										
Country of Manufacture	UK										
Export Licence Requirements	Not required for products of <1000mm diameter										

6. Communication Interfaces

The IncOder range offers 6 different Communication Interfaces:-

- Synchronous Serial Interface – see Section 6.4 (Product Options SSI1-9)
- Asynchronous Serial Interface – see Section 6.5 (Product Option ASI1 & ASI2)
- Serial Peripheral Interface – see Section 6.6 (Product Option SPI1)
- Analogue Voltage – see Section 6.8 (Product Options V0360, W3601, X0270 etc.)
- A/B/Z pulses – see Section 6.9 (Product Option ABZ1 etc.)
- BiSS-C – see Section 6.10 (Product Option BIS1)

All digital Communications Interfaces conform to the RS422 Standard. Note that for all Communications Interfaces, DATA & CLOCK inputs are not terminated with load resistors.

6.1 Output Resolution

The IncOder range offers various Options for the resolution of the output data. The required digital resolution is simply specified using the relevant Product Option – see Section 8.

INC - X – XXX – XXXXXX – XXXX – XXXX – X – XXX

Resolution measured in bits.	*18 Bits* **181001**
10 Bits **101001**	*19 Bits* **191001**
11 Bits **111001**	*20 Bits* **201001**
12 Bits **121001**	*21 Bits* **211001**
13 Bits **131001**	*22 Bits (only sizes ≥150mm)* **221001**
14 Bits (all 0-5 or 10V options) **141001**	
15 Bits **151001**	*Alternatively, for ABZ pulse output only, specify number of pulses per rev up to a max of 131,072 e.g.* **P123,456**
16 Bits **161001**	
17 Bits **171001**	

6.2 Multi-Turn or Single Turn

The default electrical output from an IncOder is over 1 rev. For multi-turn devices please contact Zettlex or your local rep. IncOder offers the possibility to count how many turns have been made by modifying the IncOder's software. To maintain turn count, an uninterruptable power supply is necessary.

6.3 Zero Point Set & Reset for Digital Outputs Product Options - SSI1-9, SPI1, ASI1-2, BIS1

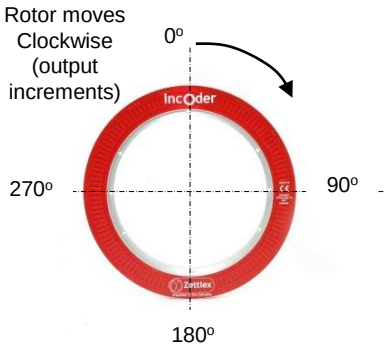

View on Stator Sensing Face

The Zero Point is the datum from which angle is measured. As supplied, the IncOder carries a factory Zero Point setting. For Screw Mount & Duplex products the Zero Point is in a range of +/-5º of the Rotor and Stator dowel positions at 12 o'clock (near the 'O' of the printed 'IncOder'). The Zero Point can be changed using the Zero Set and Zero Reset lines on the IncOder's electrical interface. The Zero Set signal will set the current IncOder position as the Zero Point (held in memory when power removed). Zero Reset signal will reset the Zero Point to the factory setting (held in memory when power removed). To use, the relevant connection should be connected to electrical ground (<0.5V) for ≥1 second at power up but left unconnected (i.e. open circuit) during operation.

6.4 Synchronous Serial Interface (SSI) – Product Options SSI1-SSI9

6.4.1 Generic Protocol Definition– Product Options SSI1-SSI9

SSI is a widely used serial interface between position sensors and controllers. It is based on the RS-422 hardware standard and implements a differential output for the DATA and a differential input for the CLOCK. (Note that DATA outputs and CLOCK inputs are not terminated with load resistors.)

Synchronous SSI uses a clock sequence from a controller to initiate the transmission of position data from the sensor (a Read Cycle), with the latest position data (see Section 5 for internal position update rate) available for transmission after each SSI Read Cycle is completed. See timing information below:-

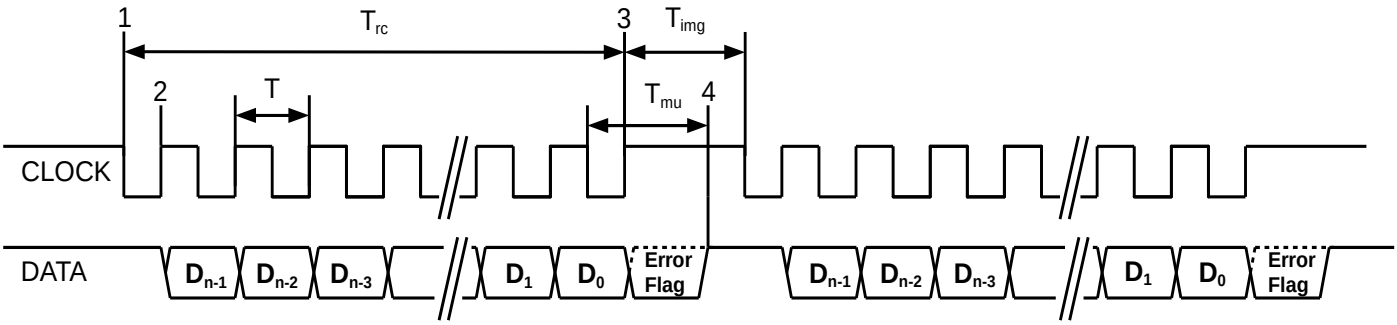

T: Clock Period (1/T = 100 kHz to 2 MHz)
Trc: Read Cycle time: This is defined as (n x T) + (0.5 x T)
Tmu: Message Update time. The time from last falling edge of clock to when new data is ready for transmission.
Tmu = 20us +/- 1 us. The DATA line will be HIGH after this time indicating a new Read Cycle can be started.
Timg: Intermessage Gap time. Must be > Tmu otherwise position data will be indeterminate.
n: The number of bits in the message (not including the Error Flag).
In idle state CLOCK and DATA are both HIGH

Notes:
1. The first falling edge after Tmu starts the Read Cycle and the transfer of data.
2. Each rising edge of the CLOCK transmits the next data bit of the message, staring with Dn-1.
3. After the last rising edge of the clock sequence, the data line is set by the Error Flag (if supported) for the period Tmu – 0.5xT
4. After Tmu, the latest position data is now available for transmission in the next Read Cycle – see Section 5 for position update rate.

6.4.2 SSI – Protocol Definition Product Options SSI1-SSI9

SSI can support a variety of protocols in which data is transmitted depending on the requirements of the SSI controller. **IncOder can be supplied with any of the following protocols – just choose what you need by using the relevant Product Option when ordering (see Section 9)**. If the protocol you require is not listed here then please consult Zettlex or your local representative.

Most popular choice

SSI1 (n = 24)

D23	PV	Position Valid Flag. Set to 1 when data is valid, otherwise 0 (the inverse of the ERROR FLAG).
D22	ZPD	Zero Point Default. Set to 1 when the Zero Point is at Factory Default, otherwise 0
D21-D0	PD[21:0]	Binary position data. If resolution of device is less than 22 bits, then the MSBs of this field are set to 0. The LSB of this field is in D0. When PV is 0, PD[21:0] value is not defined.

SSI2 (n = 24)

D23-D2	PD[21:0]	Binary position data. If resolution of device is less than 22 bits, then the MSBs of this field are set to 0. The LSB of this field is in D2. When Alarm bit is 1, PD[21:0] value is not defined.
D1	P	Parity Bit 0 indicates an even number of 1's in data (D23-D2), 1 indicates an odd number of 1's in data.
D0	A	Alarm Bit – 0 indicates normal operation, 1 indicates error condition.

SSI3 (n = 16)

D15-D0	PD[15:0]	Binary position data. When ERROR FLAG is 1, PD[15:0] value is not defined.

Note: the use of SSI3 effectively limits the measurement resolution to a maximum of 16bits. If a higher resolution is specified in the part number, the least significant bits will not be accessible by the user.

SSI4 (n = 32)

D31	PV	Position Valid Flag. Set to 1 when position data valid, otherwise 0 (inverse of ERROR FLAG).
D30	ZPD	Zero Point Default. Set to 1 when the Zero Point is at Factory Default, otherwise 0
D29-D11	PD[18:0]	Binary position data. If resolution of device is less than 19 bits, then the MSBs of this field are set to 0. The LSB of this field is in D11. When PV is 0, PD[18:0] value is not defined.
D10-D0	TS[10:0]	Time stamp data. The value of the Time Stamp counter when the position was measured. This data is always valid. The Time Stamp counter is a continuously incrementing counter in the range: 0.00ms to 20.47ms (at which point it restarts at 0.00ms). It has a resolution of 10us, with an accuracy better than 1% (based on the system oscillator).

Note: the use of SSI4 effectively limits the measurement resolution to a maximum of 19bits. If a higher resolution is specified in the part number, the least significant bits will not be accessible by the user.

SSI5 (n = 16)

D15-D0	PD[15:0]	Gray code, position data. When ERROR FLAG is 1, PD[15:0] value is not defined.

Note: the use of SSI5 effectively limits the measurement resolution to a maximum of 16bits. If a higher resolution is specified in the part number, the least significant bits will not be accessible by the user.

6.4.2 SSI – Protocol Definition Product Options SSI1-SSI9

SSI6 (n = 32)

D31-D24	CRC[7:0]	CRC-8: To verify transmission, calculate the CRC of the bottom 24 bits of the message. The resulting CRC should be the same as the received CRC field. The following parameters define CRC-8: Polynomial 0x97 Initial data 0x00 MSB First (not reversed) No final XOR calculation
D23	PV	Position Valid Flag. Set to 1 when position data is valid, otherwise 0 (the inverse of the ERROR FLAG).
D22	ZPD	Zero Point Default. Set to 1 when the Zero Point is at Factory Default, otherwise 0
D21-D0	PD[21:0]	Binary position data. If resolution of device is less than 22 bits, then the MSBs of this field are set to 0. The LSB of this filed is in D0. When PV is 0, PD[21:0] value is not defined.

SSI7 (n = 30)

D29-D24	-	Data always 0.
D23-D2	PD[21:0]	Binary position data. If resolution of device is less than 22 bits, then the MSBs of this field are set to 0. The LSB of this field is in D2. When Alarm bit is 1, PD[21:0] value is not defined.
D1	P	Parity Bit 0 indicates an even number of 1's in data (D23-D2) 1 indicates an odd number of 1's in data.
D0	A	Alarm Bit – 0 indicates normal operation, 1 indicates error condition.

SSI8 (n = 18)

D17-D0	PD[17:0]	Gray code, position data. When ERROR FLAG is 1, PD[17:0] value is not defined.

Note: the use of SSI8 effectively limits the measurement resolution to a maximum of 18bits. If a higher resolution is specified in the part number, LSBs will not be accessible by the user.

SSI9 (n = 32)

D31	PV	Position Valid Flag. Set to 1 when position data valid, otherwise 0 (inverse of ERROR FLAG).
D30	ZPD	Zero Point Default. Set to 1 when the Zero Point is at Factory Default, otherwise 0
D29-D11	PD[18:0]	Binary position data. If resolution of device is <19bits, then the MSBs of this field are set to 0. The LSB of this field is in D11. When PV is 0, PD[18:0] value is not defined.
D10-D0	TS[10:0]	Time stamp data. The value of the Time Stamp counter when the position was measured. This data is always valid. The Time Stamp counter is a continuously incrementing counter in the range: 0.00ms to 2.047ms (at which point it restarts at 0.00ms). It has a resolution of 1us, with an accuracy better than 1% (based on the system oscillator).

Note: the use of SSI9 effectively limits the measurement resolution to a maximum of 19bits. If a higher resolution is specified in the part number, the LSBs will not be accessible by the user.

6.5 Asynchronous Serial Interface Protocol – Product Options ASI1 & ASI2

This section describes the communications interface for IncOders with ASI1 or ASI2 serial protocols. Data is transmitted by the IncOder continuously formatted into Frames. Each Frame consists of a number of 8 bit data words. Each 8 Bit data word (or byte) is transmitted from a standard UART using N-8-1 (no parity, 8 data bits, 1 stop bit). ASI1 has a Baud rate of 230400 and ASI2 has a Baud rate of 921600. See below for the data format of each transmitted data word. The Frames are transmitted at a rate of 10kHz nominal (same rate as Internal Position Update Period).

Start Bit	DO	D1	D2	D3	D4	D5	D6	D7	Stop Bit

The following is the Asynchronous Serial Data protocol specified with the ASI1 or ASI2 Product Option. Each frame is defined as 6 bytes and the data format is defined as follows:

First byte (transmitted first):

D7	D6	D5	D4	D3	D2	D1	DO
1	PV	ZPD	0	0	PD[21:19]		

D7	D6	D5	D4	D3	D2	D1	DO
0	PD[18:12]						

D7	D6	D5	D4	D3	D2	D1	DO
0	PD[11:5]						

D7	D6	D5	D4	D3	D2	D1	DO
0	PD[4:0]					CRC[15:14]	

D7	D6	D5	D4	D3	D2	D1	DO
0	CRC[13:7]						

D7	D6	D5	D4	D3	D2	D1	DO
0	CRC[6:0]						

Data Definition for Asynchronous Serial Interface

PV	Position Valid flag. Set to 1 when data is valid, otherwise set to 0
ZPD	Zero Point Default. Set to 1 when the Zero Point is at Factory Default, otherwise set to 0.
PD[21:0]	IncOder Position Data. If resolution of device is less than 22 bits then the MSBs of this field are set to 0. When PV is 0, PD[21:0] value is not defined.
CRC[15:0]	CRC-16: To verify transmission, calculate the CRC of all 48 bits of the message but with CRC[15:0] set to 0. The resulting 16 bit CRC result should be the same as the received CRC[15:0]. Use the following CRC-16 parameters:

Polynomial 0x8005

Initial data 0x0000

MSB first (not reversed)

No final XOR calculation.

6.6 Serial Peripheral Interface Protocol Definition – Product Option SPI1

This section describes the communications interface for IncOders with SPI1 (Serial Peripheral Interface) serial protocol. SPI is a widely used serial interface between micro processors/controllers and peripherals. SPI uses a clock sequence from a master to control the transmission of data from the IncOder. IncOders with SPI data interface conform to the RS422 hardware specification.

Note that the DATA outputs and the CLOCK inputs are not terminated with load resistors.

The following section defines the communication protocol.

The IncOder protocol specifies that each data frame consists of 6 bytes of data (each of 8 bits, 48 bits in total) containing the position, status flags and CRC (see timing diagram on the following page).

SPI Clock Polarity is defined so that the CLOCK idle state is HIGH and the Clock Phase is defined so that the data is captured on the falling edge of CLOCK, and the data is propagated on the rising edge of CLOCK. This is commonly depicted as CPOL=1, CPHA=0 (also depicted as UCCKPL=1, UCCKPH=1).

Clock rate is 100kHz to 5MHz.

Data Definition for IncOder SPI Protocol

D47-D33	SBZ	These bits will always be Zero.
D32	ZPD	Zero Point Default flag. Set to 1 when the Zero Point is at Factory Default, otherwise 0.
D31	PV	Position Valid Flag. Set to 1 when position data is valid, otherwise 0.
D30	PS	Position Synchronised flag. Set to 1 when the position measurement was triggered by a previous SPI Frame. Set to 0 when the position measurement was triggered by a Measurement Time-out (see note 3 overleaf). Use this flag to ensure that the IncOder has synchronised position measurements to the SPI Frames (Case 1, overleaf).
D29-D8	PD[21:0]	Binary position data. If resolution of device is less than 22 bits, then the most significant bits of this field are set to 0. The LSB of this field is in D0. When PV is 0, PD[21:0] value is not defined.
D7	SD	Stale Data flag. Set to 1 when the position data has been transmitted at least once before. Set to 0 when the position data has not been transmitted before. Use this flag to detect when a new measurement has been completed (Case 2, overleaf).
D6-D0	CRC[6:0]	Cyclic Redundancy Checksum. 7 Bit CRC: Polynomial 0x5B, Initial data 0x0000, MSB first (not reversed), No Final XOR. Note – the CRC is generated from bits D7 through D32. It is calculated using a 32 bit word (or 4 bytes) with D7 shifted in to the Least Significant Bit and the 6 Most Significant Bits set to ‘0’ as required.

6.6 Serial Peripheral Interface Protocol Definition – Product Option SPI1

SPI Timing information

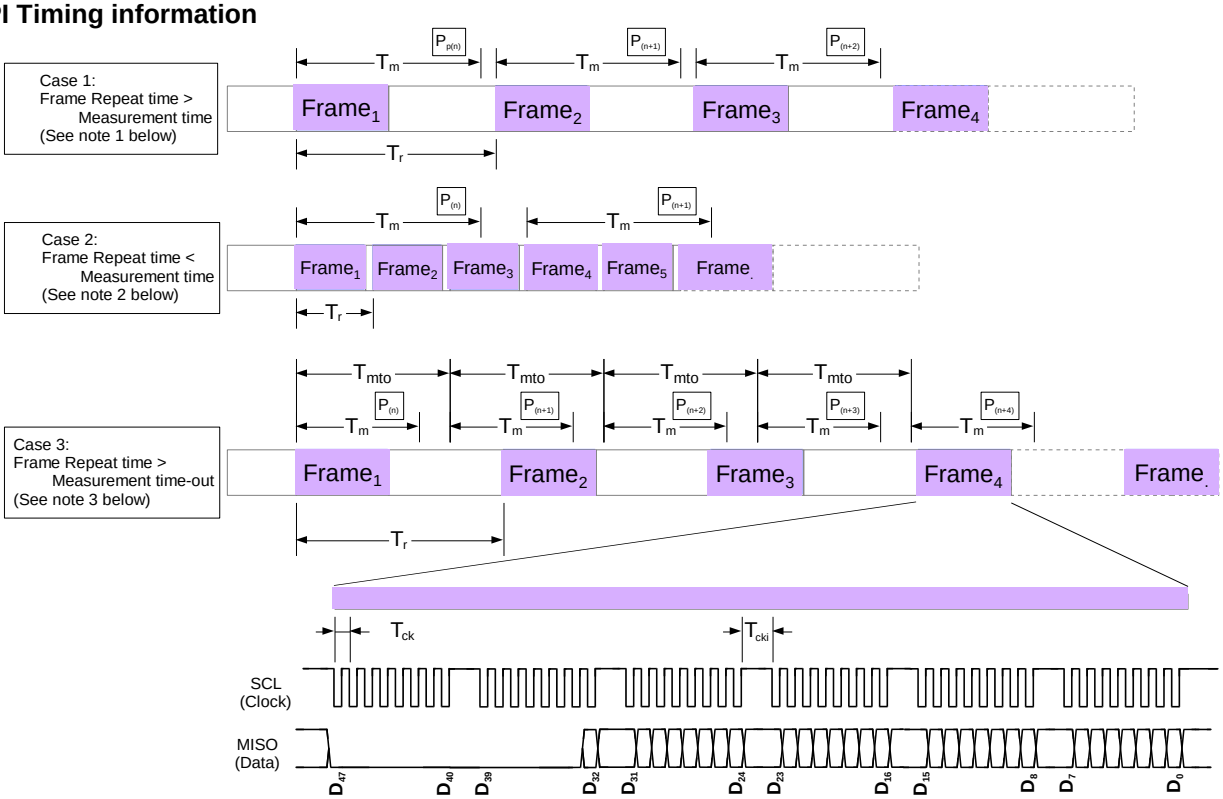

Timings determined by the Controller (SPI Master):

- T_{ck} Clock period (1/T = 100kHz to 5MHz).
- T_{cki} Clock Idle Period. Time between bytes during which CLOCK is idle. T_{cki} should be $<T_{ckimax}$ = 10µs
- T_r Frame Repetition period.

Timings defined by the IncOder (SPI Slave):

- T_m Position Measurement time. The time from the start of a position measurement to when the position and status is ready for transmission. 90µs ≤ T_m ≤ 95µs
- T_{mto} Position Measurement Time-out. The time after a position measurement has been triggered that the IncOder will automatically trigger a new measurement. 135µs ≤ T_{mto} ≤145µs.

Notes:

1. The IncOder will always attempt to trigger a new position measurement when a new SPI frame is started by the host. This will always be the case when T_r is greater than T_m and less than T_{mto}.
2. If a position measurement has already been triggered when a new SPI frame is started by the host, then a new position measurement will not be re-triggered. This may be the case when T_r is less than T_m
3. If the Host does not start a new SPI frame within time T_{mto} from the previous frame (the case when T_r is greater than T_{mto}), then the IncOder will automatically trigger a new position measurement.
4. In all cases, the IncOder will transmit the most recently completed measured position and status (see table below).
5. When CLOCK is idle for at least T_{ckimax}, then the IncOder SPI interface will reset. The first falling edge on CLOCK after T_{ckimax} will start the transmission of a new frame. This can be useful if the SPI host and slave (IncOder) lose Frame/Byte synchronisation (detected by invalid CRC).

Frame Number	Position transmitted (case 1)	Position transmitted (case 2)	Position transmitted (case 3)
Frame 1	$P_{(n-1)}$	$P_{(n-1)}$	$P_{(n-1)}$
Frame 2	$P_{(n)}$	$P_{(n-1)}$	$P_{(n)}$
Frame 3	$P_{(n+1)}$	$P_{(n-1)}$	$P_{(n+1)}$
Frame 4		$P_{(n)}$	$P_{(n+3)}$
Frame 5		$P_{(n)}$	

6.7 Analogue Voltage Interface Product Options V, W, X & Y0360 etc.

Analogue Voltage Interface versions of IncOder are available for all Midi (75 to 300mm) IncOders offering a range of max. voltage outputs of 4.5, 5.0, 9.5 and 10.0V in 90º, 180º, 270º & 360º spans with either clockwise or counter-clockwise directions. Zero, direction & span are field programmable without a PC. The following sections detail the various Product Options and field programming:-

6.7.1 Zero Point & Zero Set for Analogue Voltage Interface

The Zero Point is the datum from which angle is measured. IncOders carry a factory Zero Point setting. For Screw Mount products, the Zero Point lies within a range of +/-5º of the Rotor and Stator dowel positions at 12 o'clock (near the 'O' of the printed 'IncOder'). The Zero Point factory setting can be changed using the Zero Set line on the IncOder's connector or cable – see Section 7.2 or 9.1. The Zero Set signal will set the current IncOder position as the Zero Point (held in memory when power is removed). If only a new Zero Point is set, then Direction & Span factory settings are shifted automatically to suit the new Zero Point. To use the Zero Set function, the relevant connection should be connected to 0V for at least 1 second at power up – see Section 7.2 or 9.1. This line should be left unconnected (i.e. open circuit) during normal operation.

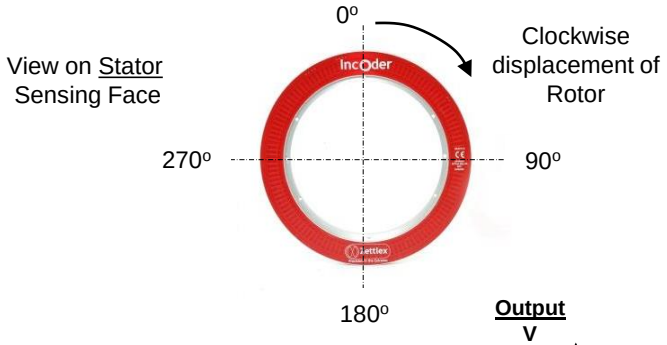

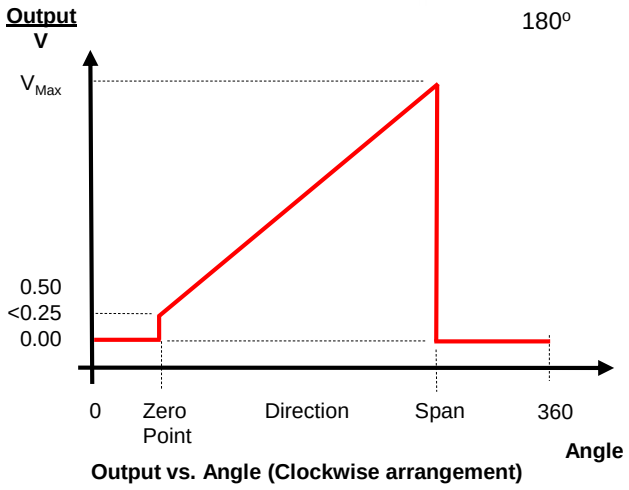

Output vs. Angle (Clockwise arrangement)

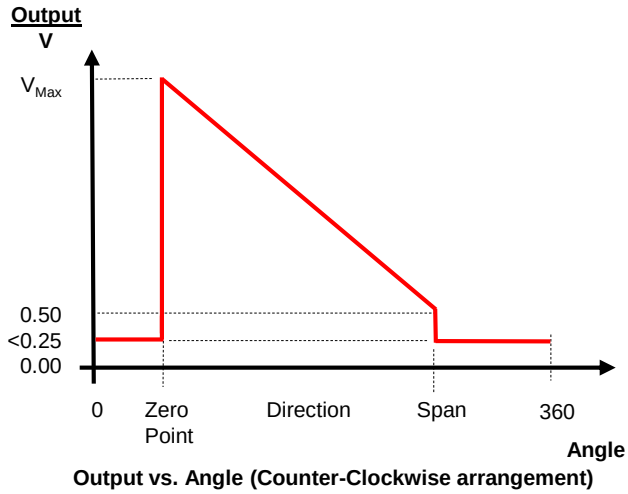

Output vs. Angle (Counter-Clockwise arrangement)

6.7.2 Selecting Max. Voltage Output for Analogue Voltage Interface

IncOders are available with 4 different Max. Voltage Outputs: 4.5, 5.0, 9.5 or 10.0V. These are set at the factory and so need to be specified, using the relevant Product Option, when ordering. For example:-

Part number INC-X-XXX-XX1001-**V**XXXX-XXX-XX-XX

For V_{max} = 10.0V, **V = V**
For V_{max} = 4.5V, **V = W**
For V_{max} = 5.0V, **V = X**
For V_{max} = 9.5V, **V = Y**

6.7.3 Direction & Direction Set for Analogue Voltage Interface

IncOders measure angle from a datum or Zero Point, so if factory settings are to be over-written, a point other than Zero & Span is needed to indicate sense of direction. This differentiates between measurement over 300º versus 60º, for example. IncOders are supplied with a factory direction setting as per their Product Option. The Direction Set signal will set the current IncOder position as the Direction Set point between Zero and Span - thus giving the IncOder with its direction sense (held in memory when power is removed). This position need not be exact but must be between Zero Position and 50% of Span. To use this function, the relevant connection should be connected to electrical ground (<0.5V) for at least 1 second at power up – see Section 7.2 or 9.1. This line should be left unconnected (i.e. open circuit) during normal operation. Until a new Span is set, after Direction setting, the Zero & Span remain as the most recent settings. **If any of the Zero, Direction & Span factory settings are to be changed by field programming, this must be carried out in sequence:- Zero - Direction – Span.**

6.7.4 Span & Span Set for Analogue Voltage Interface

The Span is the angular range (measured from Zero) over which angle is measured. IncOders carry a factory setting in accordance with the Product Option e.g. V0360 is 0.5-10V over 360º clockwise and W2701 is 0.5-4.5V over 270º counter-clockwise. See Section 8 for the full list of options. Unless specified by the relevant Product Option, the default is 360º measured in a clockwise direction from the Zero Point.

The Span Set signal will set the current IncOder position as the Span (this is held in memory when power is removed). To use this function, the relevant connection (see Section 7.2 or 9.1) should be connected to electrical ground (<0.5V) for at least 1 second at power up. This line should be left unconnected (i.e. open circuit) during normal operation. If only Span is set then Zero & Direction remain as the factory settings.

If a Span of 360º is required, then the Reset signal should be used (see Section 6.7.5) followed by Zero setting and then Direction setting (but not Span). If a small Span is required, take care to ensure the Direction setting is between Zero Position and 50% of Span

Resolution and repeatability is equivalent to 16,384 steps (14bits) over the Span, so the smaller the Span, the finer the resolution and repeatability in real terms. The specified measurement performance is valid to a minimum Span of 45º.

6.7.5 Reset for Analogue Voltage Interface

The Reset signal will reset <u>all</u> settings to the 0 to 360º clockwise default (in other words, the 0360 Product Option). To use this signal, the relevant connection (see Section 7.2 or 9.1) should be connected electrical ground (<0.5V) for at least 1 second at power up. This line should be left unconnected (i.e. open circuit) during normal operation.

6.7.6 Error Values for Analogue Voltage Interface

IncOders output 0.5V at the Zero point and V_{max} at Span. If there is an internal error or malfunction within the IncOder then the output drops to <0.25V. Similarly, if Span is not 360º and IncOder travels past either Zero or Span positions, the output drops to <0.25V. In other words, an error signal shows out of range. For 360º IncOders, the changeover is from V_{max} to 0.5V at the 360º position.

6.7.7 Power Supply for Analogue Voltage Interface

Analogue Voltage Interface output IncOders accept power from any DC voltage from 11.5 to 32VDC. Accordingly, Product Options for either 12, 12CT, 24 or 24CT Power Supply may be specified (but not 5 or 5HT).

6.8 A/B/Z Pulse Interface Product Options ABZ1 to ABZ6

IncOders with A/B/Z pulses are often used as velocity or brushless motor encoders. A/B/Z pulse IncOders provide cyclical outputs as the encoder rotates. Streams of pulses are arranged in phase quadrature for direction sensing. The Z-reference or 'index' pulse is triggered once per turn. There are 6 Product Options:-

Product Option ABZ1 - RS422 with 90º width Z reference
Product Option ABZ2 - RS422 with 180º width Z reference

Clockwise rotation of rotor when looking at Stator sensing face

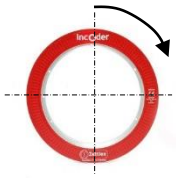

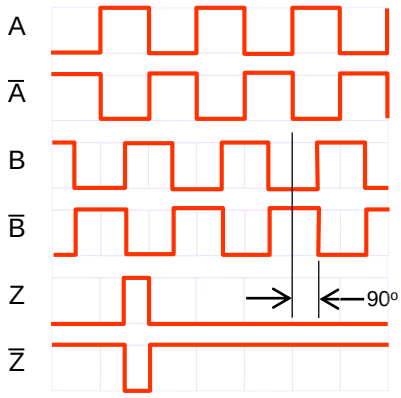

A leads B for clockwise rotation of rotor
Phasing: 90º electrical
Symmetry: 180º electrical
Max. pulse frequency: 1MHz
High signal: >2.5V
Low signal: <0.5V
Max. output load: 30mA
Diagram shows 90º width Z reference (ABZ1)

Product Option ABZ3 - Push-Pull (TTL) with 90º width Z reference
Product Option ABZ4 - Push-Pull (TTL) with 180º width Z reference
Product Option ABZ5 - Push-Pull (HTL) with 90º width Z reference
Product Option ABZ6 - Push-Pull (HTL) with 180º width Z reference
Push-Pull devices may be run in antivalent mode (shown above) or single ended mode (shown below).

Clockwise rotation of rotor when looking at Stator sensing face

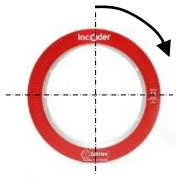

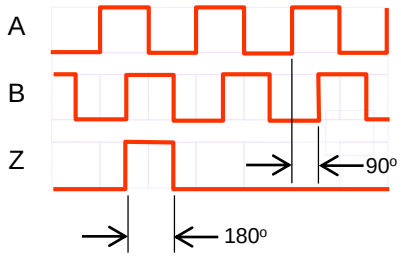

A leads B for clockwise rotation of rotor
Phasing: 90º electrical
Symmetry: 180º electrical
Max. pulse frequency: 1MHz
High signal: >Vsupply – 2V (HTL) or >4.5V (TTL)
Low signal: <0.2V
Max. current: 30mA
Diagram shows 180º width Z reference (ABZ4 or 6)

Note: 1 edge = 1 count or 1 bit. 4 counts per pulse. Readers should be set to 4x resolution for full resolution.

Z Reference Position: The factory set Z Reference Position is at +/-5º of the Rotor and Stator dowel positions at 12 o'clock (near the 'O' of the printed 'IncOder'). Z Reference Position may be changed using the Z Set or Z Reset lines on the IncOder's electrical interface (see Section 7.3 or 9.2).

Setting Z Reference Position: Z Set signal sets the current position as Z Reference Position. This is held in memory when power removed. Z Reset signal will reset the Z Reference Position to factory setting (held in memory when power removed). To use, the relevant connection should be connected to electrical ground (<0.5V) for at least 1 second at power up but left unconnected (i.e. open circuit) during normal operation (see Section 7.3 or 9.2).

Error Signalling: IncOders carry out various self checks. If an error is detected then an error signal is generated. This is shown by all outputs going to low signal (including differential outputs).

Counts per rev (CPR) & Pulses per rev(PPR): CPR may be chosen as any even integer number of bits up to 19 e.g.12 (4096CPR). PPR may be chosen up to 131,072. See Section 8 on how to select CPR or PPR from the part number. In part number, letter P in front of chosen pulses per rev indicates selection.

6.9 BiSS-C Interface Product Option BIS1

BiSS-C is a popular communications interface between controllers and position sensors. The IncOder BiSS-C interface is unidirectional and provides fast, compact, economic serial communications using RS422 (SSI) compatible hardware. The IncOder BiSS-C interface is a point to point configuration (a single device with a single slave), conforming to the requirements of BiSS-C Unidirectional. In this configuration, the IncOder is the only slave connected to the master (the host control system).

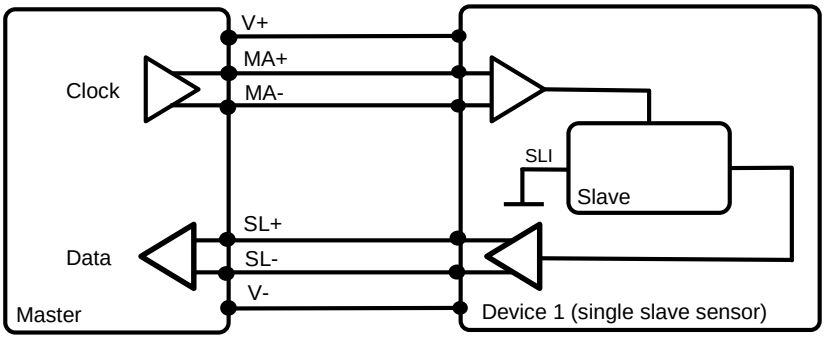

The Master transmits clock signals to the Slave via the MA line. The SL line carries the sensor data directly from the Slave back to the Master. The interface has only two unidirectional, differential lines (as the IncOder permanently connects the input SLI to '0'). Parameters for the individual data channels are specified below. These parameters can be pre-programmed in the controller and referenced via an ID or lookup table, or manually entered.

BiSS-C Timing Parameters

Symbol	Parameter	Min.	Max.	Unit
$1/T_{MA}$	Clock Frequency	600	2000	kHz
$T_{BISS\text{-}TIMEOUT}$	BiSS Timeout	15	20	micro-seconds

BiSS-C Data Channel Parameters

Number of Bits (SCD length)	31
Processing Time	12 Clock Cycles (12 x T_{MA} micro-seconds)
Data Area Length & Alignment	25Bits, Right Aligned
CRC	Width: 6Bits Polynomial: 0x43 Initial Value: 0x00 Output Inverted

Data Area Definition

MSB LSB

F2	F1	FO	D21	D20	D19	D18	….	D3	D2	D1	DO

F2: '1' = valid (the position reading is valid)
F1: '1' = zero position default (the zero position is set to the factory default value)
FO: '1' = sync (position data reading was synchronised to previous BiSS frame)
D21: Most significant bit of the position data (if IncOder resolution is <22Bits the MSBs are set to '0')
DO: Least significant bit of the position data.

Note. The IncOder implements a "pipelined" data output. The position (and status) returned in the Data Area Definition is from the reading triggered by the previous BiSS frame provided that the frame repetition period conforms to the requirements described for the SPI1 protocol (see Section 6.6).

7. Connector Diagrams

7.1 Product Option AC1* + Digital Outputs SSI1-9, ASI1-2, SPI1, BIS1

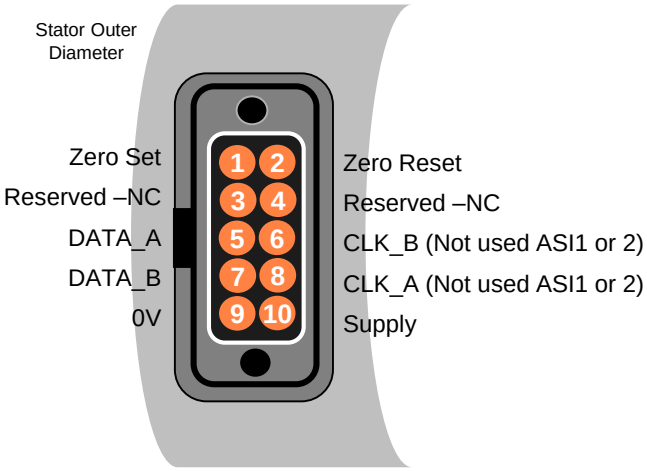

7.2 Product Option AC1* + Analogue Voltage Outputs V0360, X3601 etc.

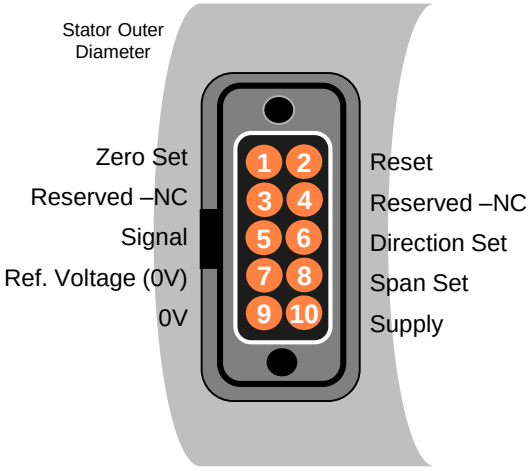

7.3 Product Option AC1* + A/B/Z Pulse Outputs ABZ1 - 6

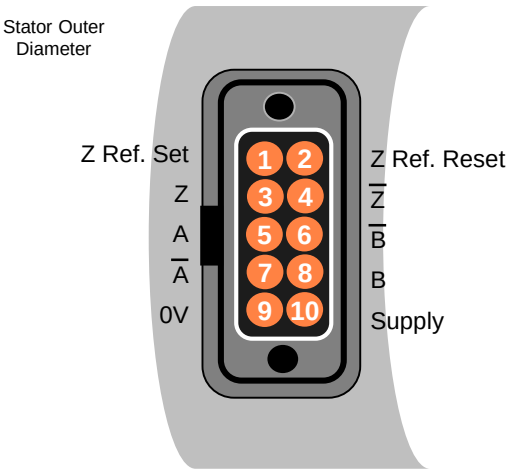

Notes:-

- Data also applies to connectors at end of radial connections
- 27kOhm pull up resistors fitted to Zero Set, Span Set, Direction Set, Zero Reset & Reset inputs
- Reserved pins are for factory use only and should be left open circuit.

8. Product Ordering

INC - X – XXX – XXXXXX – XXXX – XXXX – X – XX

Mechanical Format

Screw Mount Stator & Screw Mount Rotor – **3**

Servo Clamp Stator & Set Screw Rotor – **4**

Servo Clamp Stator & Plain Rotor – **6**

Screw Mount Stator & Set Screw Rotor – **7**

Screw Mount Stator & Plain Rotor – **8**

Servo Clamp Stator & Screw Mount Rotor – **9**

Duplex Stator & Duplex Rotor – **10**

External Mount Stator & Screw Mount Rotor - **13**

External Mount Stator & Plain Rotor - **14**

External Mount Stator & Set-Screw Rotor - **15**

Outer Diameter

075	**150**	**225**
090	**175**	**250**
100	**200**	
125		

Resolution

10 Bits **101001**	17 Bits **171001**
11 Bits **111001**	18Bits **181001**
12 Bits **121001**	19Bits **191001**
13 Bits **131001**	20Bits **201001**
14Bits (Note 3) **141001**	21Bits **211001**
15 Bits **151001**	22Bits (Note 9) **221001**
16 Bits **161001**	PPR (Note 10) **PXXXXXX**

Finish

AN clear, hard-anodized

Supply Voltage

5	**5HT** high temp. (Note 11)
12	**12CT** cold temp.
24	**24CT** cold temp.

Connector

AC1 axial connector
RFC1 vertical connector, 100mm radial
RFC2 vertical connector, 12mm radial
RFC3 90 degree connector, 100mm radial
RFC4 90 degree connector, 12mm radial
RFC5 no connector, 100mm radial
RFC6 no connector, 12mm radial
RFC7 downward cable, 12mm radial
RFC8 upward cable, 12mm radial
RFC9 downward cable, 100mm radial
RFC10 upward cable, 100mm radial
RFC11 vertical connector, obverse, 100mm radial
RFC12 vertical connector, obverse, 12mm radial
RFC13 90 degree connector, obverse, 100mm radial
RFC14 90 degree connector, obverse,12mm radial
AFL1 integral axial cable
AFL2 integral axial cable, sealed Rotor & Stator
AFL3 integral axial, high flex cable
AFL32 integral axial, high flex cable, sealed Rotor & Stator
AFL4 integral axial cable, low profile
AFL42 integral axial cable, low profile, sealed Rotor & Stator
AFL5 integral axial, PTFE / MIL spec,
AFL52 integral axial, PTFE / MIL spec, sealed Rotor & Stator

Communication Interfaces

ASI1 Asynch. Serial I/face 1	**V0360** 0-10V Clockwise 360º (Note 2)
ASI2 Asynch. Serial I/face 2	**V3601** 0-10V C-clockwise 360º (Note 2)
SSI1 SSI Type 1	**V0270** 0-10V Clockwise 270º (Note 2)
SSI2 SSI Type 2	**V2701** 0-10V C-clockwise 270º (Note 2)
SSI3 SSI Type 3 (Note 7)	**V0180** 0-10V Clockwise 180º (Note 2)
SSI4 SSI Type 4 (Note 7)	**V1801** 0-10V C-clockwise 180º (Note 2)
SSI5 SSI Type 5 (Note 7)	**V0090** 0-10V Clockwise 90º (Note 2)
SSI6 SSI Type 6	**V0901** 0-10V C-clockwise 90º (Note 2)
SSI7 SSI Type 7	**ABZ1** RS422 90º width Z (Note 4)
SSI8 SSI Type 8 (Note 7)	**ABZ2** RS422 180º width Z (Note 4)
SSI9 SSI Type 9 (Note 7)	**ABZ3** Push-Pull TTL 90º width Z (Note 4)
SPI1 Serial Peripheral I/face	**ABZ4** Push-Pull TTL 180º width Z (Note 4)
BIS1 BiSS-C right aligned	**ABZ5** Push-Pull HTL 90º width Z (Note 4)
	ABZ6 Push-Pull HTL 180º width Z (Note 4)

Notes:

1. 1 IncOder includes 1 Stator & 1 Rotor but excludes Accessories (e.g. Servo Clamps)
2. Zero, Span & Direction for analogue output may be over-written by user. V_{max} is specified by Product Option. For V_{max} of 10Volts then V=V; for V_{max} of 4.5Volts then V= W; for V_{max} of 5Volts then V=X ; for V_{max} of 9.5Volts then V= Y
3. Analogue Voltage Interfaces are all 14Bit resolution & 12, 24, 12CT or 24CT Supply Voltage
4. Highest resolution for ABZ output is 19Bits
5. INC-10 only available in 125mm and higher sizes with AC1 or AFL connector options.
6. INC-10 default is for inner and outer devices to be identical – see Section 5.4.1 for alternative
7. Maximum effective resolution limited by communications protocol – see Section 6.4.2
8. See Section 8.3 for Extended Product Range options
9. 22Bit resolution only available in sizes of 150mm and above
10. ABZ pulse output only - if required resolution is not an integer bit value, specify even number of pulses up to a max of 131,072
11. High Temperature Option only available with SSI1-9, SPI, ASI1-2 & BiSS-C Communications.

8.1 Product Ordering - General

We're here to help – any difficulties, then please contact Zettlex or your local representative.

Here are some example part numbers:-

INC - 3 – 075 – 181001 - SSI1 - AC1 – 12 – AN = Screw mount format, 75mm diameter, 18 bit resolution, SSI1, axial connector, 12V, hard-anodized.

INC – 4 – 90 – 191001 - ASI1 - RFC1 – 24 – AN = Servo clamp format, 90mm diameter, 19 bit resolution, asynch. serial data, radial flex connector 100mm long, 24V, hard-anodized.

If a non-standard product is required, we will generate a part number accordingly – like the following example:-

INC – ACME – 508 – 141002 – X3601 - AB – 12CT – SBP = ACME custom design format, 508mm diameter, 14 bit resolution, data output over 2 revs, 0.5 to 5.0V over 360º clockwise, custom connector, 12V supply, cold temperature option, SurTec650 surface finish, Burn-in, leaded solder.

8.2 Product Ordering – Extended Range

For most applications Extended Product Range Options are not necessary. However, where these additional or alternative steps are necessary, add the following Product Options to the end of the standard part number. One or more of Extended Product Options may be added. Note that selection of any Extended Product Range Option increase costs and lead-times and should only be specified if necessary.

- **B** Extended thermal stress-screening (burn-in test) / bake-off
- **E** Engraved serial number and part number on Stator & Rotor (rather than serial label)
- **G** Very high shock & vibration mechanical arrangement
- **P** Use of leaded solder (rather than RoHS compliant solder)
- **S** SurTec650 conductive surface finish (rather than clear, hard-anodized surface finish)
- **V** Option for high operating pressure
- **C** Conformally coated sensor faces

For cold temperature option (to -60ºC operating) select **12CT** or **24CT** in Supply Voltage Product Option. For high temperature option (to 105ºC operating) select **5HT** in Supply Voltage Product Option.

Example of an extended part number:
INC – 4 – 150 – 191001 - ASI1 - RFC1 – 12CT – SBG
Servo clamp format, 150mm diameter, 19 bit resolution, asynchronous serial data, radial connection 100mm long with vertical connector, 12V (cold temperature), SurTec650 surface finish, extended thermal stress-screening, very high shock & vibration arrangement.

9.1 Standard Cable (8-way) & High Temperature Cable (8-way)

Mating connector and tinned wires on other end.
Use this for SSI1-9, SPI1, ASI1-2, 0-10V & BiSS-C comms.
Use the 10-way cable for A/B Pulse comms.

Standard Cable:-
Product Option INC – CAB3 – 2 (2m long)
Product Option INC – CAB3 – 5 (5m long)
Product Option INC – CAB3 – 10 (10m long)

High Temperature Cable:-
Product Option INC – CAB3 – 2 – HT (2m long)
Product Option INC – CAB3 – 5 – HT (5m long)
Product Option INC – CAB3 – 10 – HT (10m long)

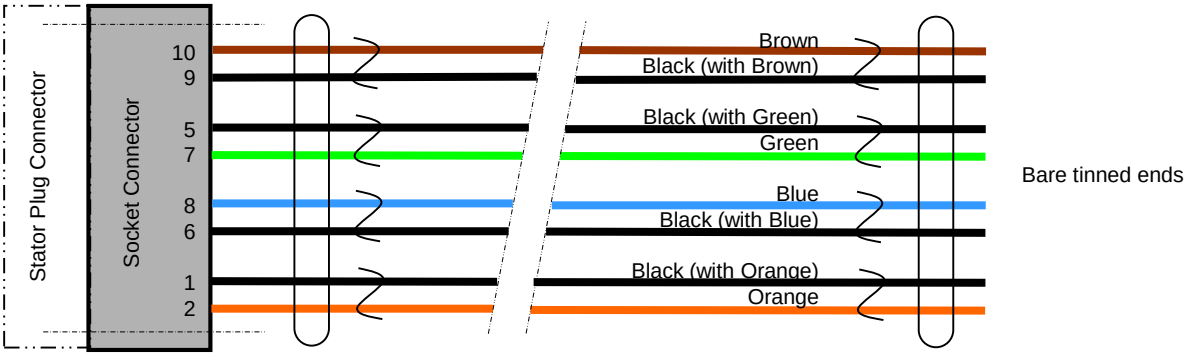

Pair No.	Colour	Connector Pin (For Info. Only)	Signal (SSI1-8 & SPI & BiSS-C)	Signal (ASI1)	Signal (0-5V, 0-10V etc)
1	Brown	10	V_{supply}	V_{supply}	V_{supply}
1	Black	9	0V	0V	0V
2	Black	5	Data A	Data A	Signal
2	Green	7	Data B	Data B	Signal Ref.
3	Blue	8	Clock A	Not Used	Span Set
3	Black	6	Clock B	Not Used	Direction Set
4	Black	1	Zero Set	Zero Set	Zero Set
4	Orange	2	Zero Reset	Zero Reset	Reset

Notes
- Socket Connector: Harwin DataMate J-Tek 10-way with 2 jack screws, part number M80-461-10-42
- Temperature Rating = -30 to +80Celsius or 105Celsius for High Temp. option
- UL Temperature Rating 80Celsius (UL AWM Style 2464) or 105Celsius for High Temp. option
- Cable diameter = 6mm nominal
- Min. flexing rad. = 76mm with a 1-off bend radius (e.g. on installation) of 20mm
- Cable length = 2, 5 or 10m +/- 0,1m as standard
- Cable sheath & outer jacket = PVC for standard & PTFE for High Temp. option
- Conductors = 24 AWG multi-strand copper wires, twisted pairs, overall foil shield, tinned copper drain wire
- Conductor insulation = polyethylene for standard & PTFE for High Temp. option
- For integral axial cable (Product Option AFL1-52) connection table see Section 5.9.

9.2 Standard Cable (10-way)

Mating connector and tinned wires on other end.
Use this cable for A/B pulse comms.

Product Option INC – CAB5 – 2 (2m long)
Product Option INC – CAB5 – 5 (5m long)
Product Option INC – CAB5 – 10 (10m long)

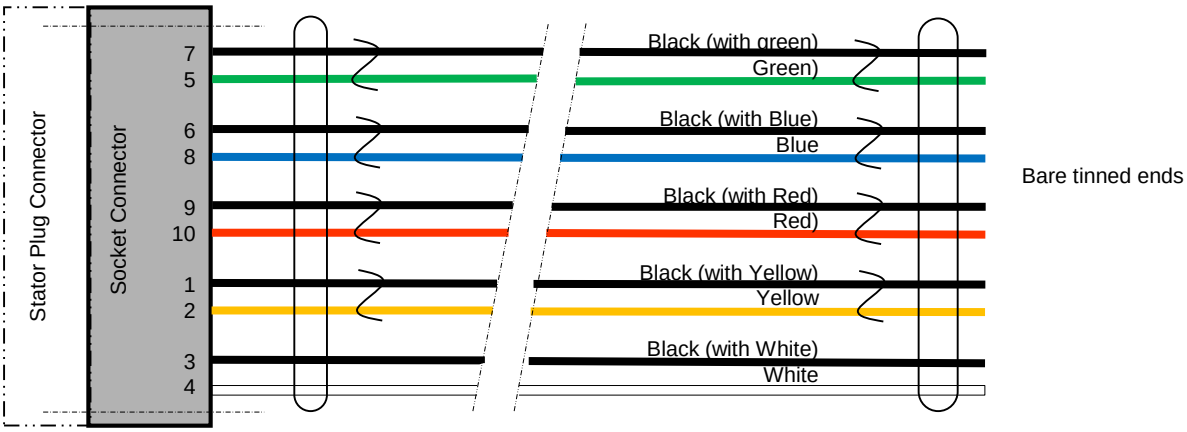

Notes

- Cable is 10-way, 24 AWG stranded (7x32) conductors, semi-rigid PVC external insulation & jacket, 5x twisted pairs, overall foil shield (100% cover), 24AWG stranded drain tinned copper drain wire.
- All other specification points as per Belden 9505
- Socket Connector: Harwin DataMate J-Tek 10-way with 2 jack screws, part number M80-461-10-42
- Temperature Rating = -30 to +80Celsius. UL Temperature Rating 80Celsius (UL AWM Style 2464)
- Diameter = 7.3mm
- Cable length = 2000 +/- 100mm as standard
- Min. flexing rad. = 76mm with a 1-off bend radius (e.g. on installation) of 20mm
- For integral axial cable (Product Option AFL1-52) connection table see Section 5.9.

Pair No.	Colour	Connector Pin (For Info. Only)	Signal (A/B pulses & Z Ref.)
1	Black	7	A complement
1	Green	5	A
2	Black	6	B complement
2	Blue	8	B
3	Black	9	0V
3	Red	10	V_{supply}
4	Black	1	Z Ref Set
4	Yellow	2	Z Ref. Reset
5	Black	3	Z
5	White	4	Z complement

9.3 Servo Clamp – Part Number INC-CLAMP1

For use with Servo Clamp format Stators. Servo Clamps are sometimes referred to as 'Clamp Cleats' or 'Screw Clamps'. Zettlex recommends at least 3 Clamps on each Stator in M2.5 locations equispaced on a P.C.D. of IncOder dimension (**A** + 8.00). Supplied in a pack of 3. For IncOders up to and including 125mm use at least 3 Clamps; for 150 & 175mm use at least 4 and at least 6 for larger sizes.

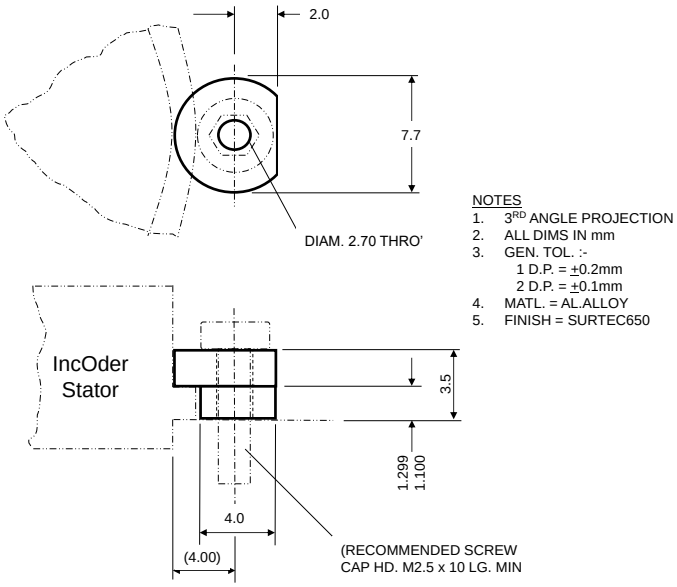

9.4 Shim – Part Number INC-SH-XX

For use with all mechanical format IncOder Stators and/or Rotors where the host system is arranged such that axial gap IncOder limits cannot otherwise be met. The shims are nominally 0.1mm thick Polymex™ Polyester. A variety of sizes is available from 75 to 250mm sizes in 25mm steps. Specify by the nominal O.D. e.g. INC-SH-75. An aperture allows axial cable/connector egress. Supplied in packs of 5.

Part Number INC – SH -75 Nominal O.D. 75.0mm
Part Number INC – SH -100 Nominal O.D. 100.0mm
Part Number INC – SH -125 Nominal O.D. 125.0mm
Part Number INC – SH -150 Nominal O.D. 150.0mm
Part Number INC – SH -175 Nominal O.D. 175.0mm
Part Number INC – SH -200 Nominal O.D. 200.0mm
Part Number INC – SH -225 Nominal O.D. 225.0mm
Part Number INC – SH -250 Nominal O.D. 250.0mm

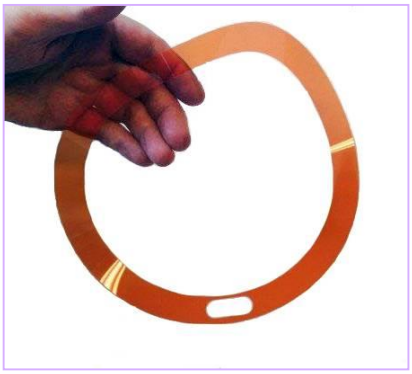

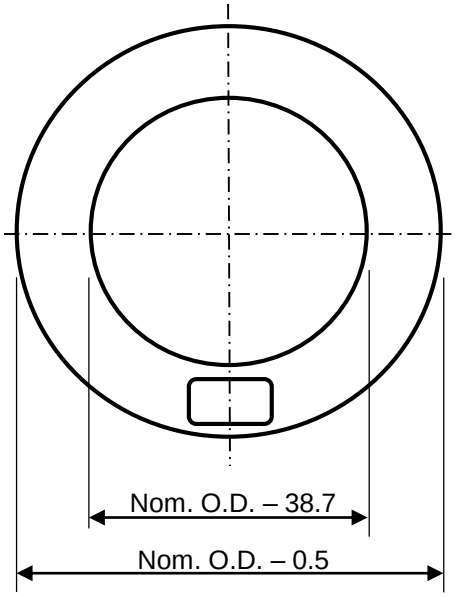

9.5 Rotor Shaft Clamp – Part Number INC-RSC-X

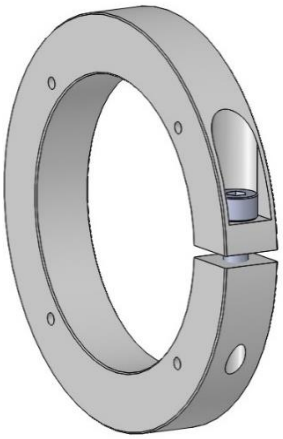

Rotor Shaft Clamps are for use with Screw Mount Rotors and allow the Rotors to be clamped, rather than screwed, to a through shaft. Rotor Shaft Clamps screw to the Rotors using the holes on the inner part of the Rotor. Once attached, the assembly is then tightened on to the through shaft using the Clamp's own screw. Rotor Shaft Clamps come in various sizes suitable for 75 to 300mm IncOders.

NOTES

1. **3D CAD IGES FILES AVAILABLE ON WWW.ZETTLEX.COM**
2. ALL DIMS IN mm – DO NOT SCALE
3. 3RD ANGLE PROJECTION
4. MATERIAL = ALUMINIUM ALLOY, HARD ANODIZED
5. TOLERANCES (UNLES STATED OTHERWISE):-
   0 DECIMAL PLACES = ±0.5
   1 DECIMAL PLACES = ±0.2
   2 DECIMAL PLACES = ±0.1

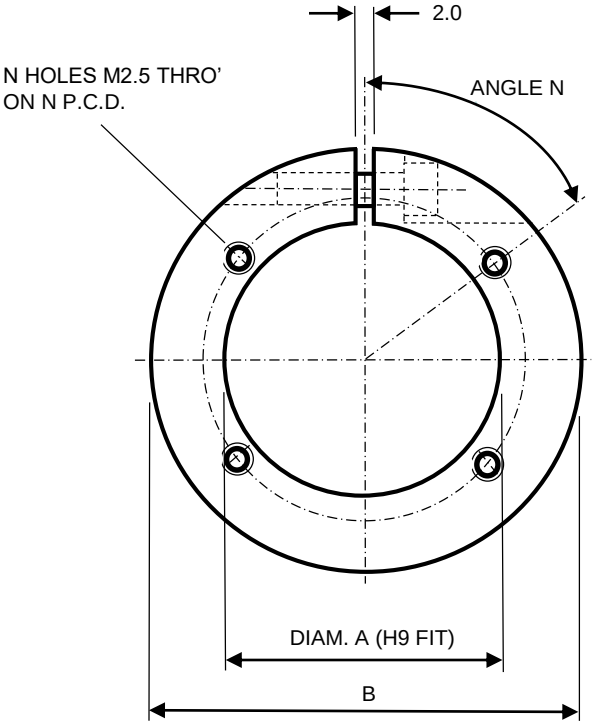

SIDE ELEVATION SHOWING POSITION
OF A SCREW MOUNT ROTOR & A STATOR

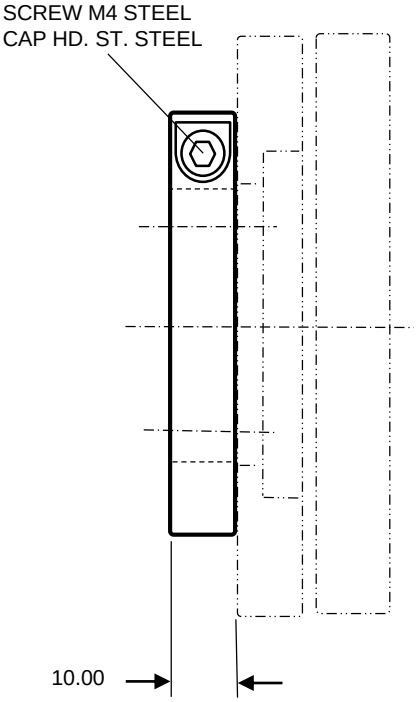

NOTE REGARDING ATTACHMENT METHOD. FIRSTLY, ATTACH CLAMP TO ROTOR USING 'N' SCREWS. TIGHTEN M4 SHAFT CLAMP SCREW TO SECURE TO SHAFT AND ONLY THEN TIGHTEN THE 2 SCREWS ADJACENT TO SHAFT CLAMP SPLIT LINE.

Description	Part Number	Dim. A mm	Dim. B mm	N P.C.D. mm	N Angle Degrees	N Holes
Rotor Shaft Clamp for 75mm IncOder	INC-RSC-75	24.000	44.00	30.50	45	4
Rotor Shaft Clamp for 100mm IncOder	INC-RSC-100	49.000	69.00	55.50	45	4
Rotor Shaft Clamp for 125mm IncOder	INC-RSC-125	74.000	94.00	80.50	45	4
Rotor Shaft Clamp for 150mm IncOder	INC-RSC-150	99.000	119.00	105.50	30	6
Rotor Shaft Clamp for 175mm IncOder	INC-RSC-175	124.000	144.00	130.50	30	6
Rotor Shaft Clamp for 200mm IncOder	INC-RSC-200	149.000	169.00	155.50	30	6
Rotor Shaft Clamp for 225mm IncOder	INC-RSC-225	174.000	194.00	180.50	30	6
Rotor Shaft Clamp for 250mm IncOder	INC-RSC-250	199.000	219.00	205.50	22.5	8
Rotor Shaft Clamp for 300mm IncOder	INC-RSC-300	249.000	269.00	255.50	22.5	8

9.6 Spacer Ring – Part Number INC-RG-X

Spacer Rings are for use with External Clamp Stators and may be used to space the Stator from host equipment and provide an enclosed space for the Rotor. Such arrangements are suited to environments where harsh mechanical impact might damage the sensing faces of Rotor or Stator.

NOTES

1. **3D CAD IGES FILES AVAILABLE ON WWW.ZETTLEX.COM**
2. ALL DIMS IN mm – DO NOT SCALE
3. 3RD ANGLE PROJECTION
4. MATERIAL = ALUMINIUM ALLOY, HARD ANODIZED
5. TOLERANCES (UNLES STATED OTHERWISE):-
   0 DECIMAL PLACES = ±0.5
   1 DECIMAL PLACES = ±0.2
   2 DECIMAL PLACES = ±0.1

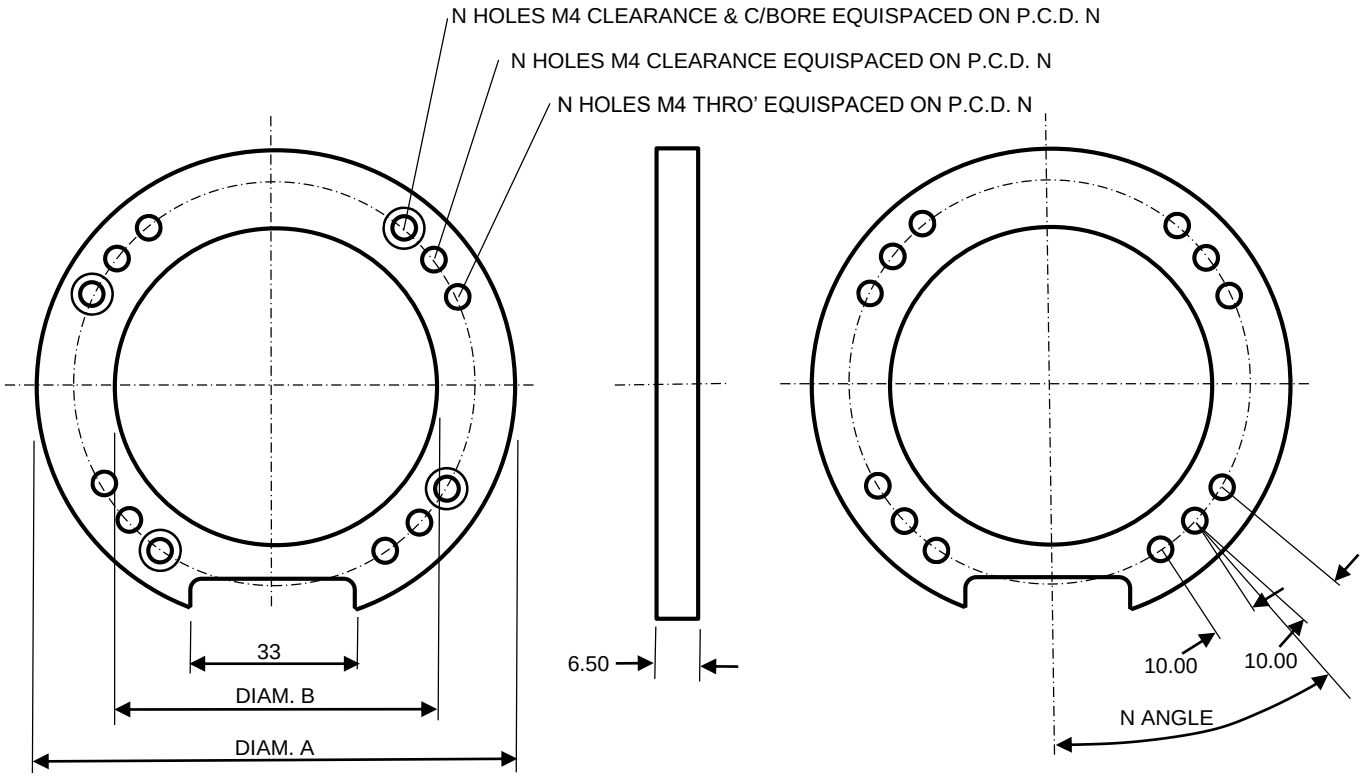

Part Description	Part Number	Dim. A mm	Dim. B mm	N P.C.D. mm	N Angle Degrees	N Holes
Spacer Ring for 75mm IncOder	INC-RG-75	100.00	77.00	87.50	38.4	4
Spacer Ring for 100mm IncOder	INC-RG-100	125.00	102.00	112.50	38.4	4
Spacer Ring for 125mm IncOder	INC-RG-125	150.00	127.00	137.50	38.4	4
Spacer Ring for 150mm IncOder	INC-RG-150	175.00	152.00	162.50	23.4	6
Spacer Ring for 175mm IncOder	INC-RG-175	200.00	177.00	187.50	23.4	6
Spacer Ring for 200mm IncOder	INC-RG-200	225.00	202.00	212.50	23.4	6
Spacer Ring for 225mm IncOder	INC-RG-225	250.00	227.00	237.50	23.4	6
Spacer Ring for 250mm IncOder	INC-RG-250	275.00	252.00	262.50	15.9	8
Spacer Ring for 300mm IncOder	INC-RG-300	325.00	302.00	312.50	15.9	8

10.1. How do IncOders work?

IncOders work in a similar way to rotary variable transformers, brushless resolvers or synchros. The Stator receives DC power and produces a low power AC electromagnetic field between the Stator & Rotor. This field is modified by the Rotor depending on its angle. The Stator senses the resulting field and outputs the rotation angle as an analogue or digital signal. Unlike resolvers, IncOders use laminar circuits rather than wound wire spools. This technology enables IncOder's compact form, low mass, low inertia and high accuracy without high precision installation.

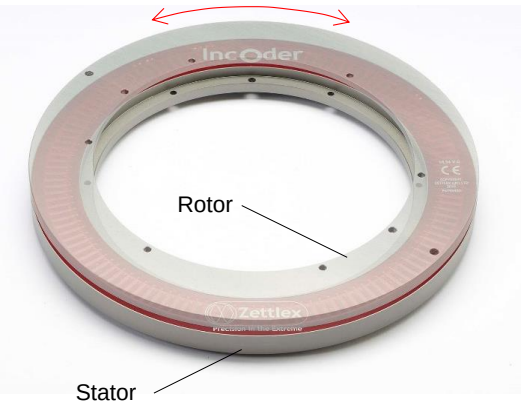

10.2. Is IncOder measurement truly absolute for absolute output devices?

Yes. Measurement will be the same before and after power interruption. No motion is needed at start up.

10.3. Does measurement performance vary with Rotor concentricity?

Resolution, repeatability & accuracy (linearity) will be as specified, provided Rotor concentricity is within specified limits. One might expect accuracy to degrade significantly with concentricity, but IncOders use the full faces of Rotor & Stator, so errors are nulled by diametrically opposing factors. This is different to other encoder technologies – notably optical or capacitive devices - where performance depends on tightly controlled concentricity.

10.4. Can IncOders be used outside the stated operating temperature limits?

Operating temperature limits are set by some of IncOder's electronic parts rather than the basic technique. Standard IncOders are rated -40 or 85°C operation. The Extended Range offers a cold option (Product Options 12VCT or 24VCT) for -60°C or a high temperature option for +105°C (Product Option 5HT). IncOders can be used outside these limits following qualification by the user. At temperatures at or below the stated lower limit, it is recommended to leave the unit powered or allow an extended powered period (>1 minute) before operation.

10.5. What happens if the Rotor or Stator get wet or dirty?

Measurement performance is unaffected by humidity, condensation, dirt, dust, oil, mud or sand. All IncOders will survive temporary immersion to depths of 1m water. Where frequent exposure to liquids, or immersion, is part of the operating environment, units with integral connection and Product Option C should be specified.

10.6. How can an IncOder be calibrated?

Calibration is only relevant for some ultra high accuracy applications such as astronomical telescopes. Readings from an IncOder are stored and compared to a reference in a look-up table in the host system. Such an arrangement will negate any inaccuracy due to inherent non-linearity or installation tolerances. Resolution & repeatability are unaffected by calibration.

10.7. At what Baud rate can the data interface operate at and does this effect cable length?.

The longer the transmission distance (Cable Length), the slower the recommended Baud Rate. This table shows recommended Baud Rates vs. Cable Length.

Baud Rates For Data Transmission				
Cable Length (m)	<30	<60	<120	<250
Baud Rate	<400 kHz	<300 kHz	<200kHz	<100 kHz

10.8. Are IncOders affected by magnets?

No. Magnets produce DC fields. IncOders use AC electro-magnetic fields at a highly specific frequency.

10.9. Are IncOders suitable for use in harsh electromagnetic fields?
Yes. Many IncOders are used near powerful sources of electromagnetic noise such as motors or transformers. IncOder's aluminium housing produces a Faraday cage effect around the internal electronics and the technology is designed so that incoming, far-field radiation is self cancelling or filtered out.

10.10. Do IncOders produce electromagnetic emissions?
Radiated emissions are tiny and limited to the IncOder's internal sensor faces. The IncOder housing has a Faraday cage effect. IncOders are often used in proximity to sensitive devices such as navigation aids.

10.11. What if we need to earth the IncOder casing?
Some applications such as fighting vehicles and aircraft require the IncOder casework to be electrically earthed. Some IncOder housing finishes are hard-anodized which is non-conductive. A connection can be made using an earth strap with a crinkle washer which penetrates the anodized surface. Alternatively, remove the anodized surface in the immediate vicinity of the strap (usually located using one of the attaching screws) using a file or abrasive. Alternatively, conductive finishes such as Alocrom or Surtec650 may be specified from the Extended Product Range (standard for 37 and 58mm products).

10.12. Does the Rotor need electrical earthing?
No. Some capacitive devices require the rotating shaft to be electrically connected to earth so as to avoid electrostatic interference. There is no such requirement with IncOder.

10.13. Does measurement performance vary with Rotor to Stator gap?
Resolution, repeatability & linearity will be as specified, provided gap is to specified tolerances. Within limits, the IncOder's measurement resolution & repeatability are independent of gap. If gap tolerance is increased from ±0.35mm to ±0.50mm the *guaranteed* measurement non-linearity will double. For example, if a 250mm IncOder has a gap tolerance of ±0.50mm (rather than the specified +0.35mm) the *guaranteed* linearity will increase from +/-40 arc-secs to +/-80 arc-secs. Gap tolerances are most easily achieved using Set Screw or Shaft Clamp Rotors. Alternatively the required gap may be maintained by the use of a shim – see IncOder Accessories – Section 9.4.

10.14. Do IncOders carry out self checks or Built-In-Test (BIT)?
Yes. If BIT shows an internal error then an error signal is generated. The BITs include continuity/damage, presence of Rotor, in-range Rotor, gross electromagnetic malfunction, window watchdog timer, power on reset, power brownout reset, timeouts for clock input, read/write and internal flash data memory value checks.

10.15. Do IncOders outgas?
IncOder housings are hard-anodized, Surtec or Alocrom finished aluminium which produce no outgassing. The epoxies and other materials used inside the devices comply with NASA's classification of low outgassing materials for spacecraft with TML of <1% and CVM of <0,1% measured at 125ºC over 24 hours in vacuum according to ASTM E-595-90. IncOders are successfully used with sensitive optical devices without residues from the IncOder affecting the lenses.

10.16. How can we specify a custom IncOder variant?
Use this document as a basis and specify any differences. Preferably, a standard outer diameter 'A' dimension (i.e. 75, 90, 100, 125mm etc.) and a proportionate inner diameter should be used – see Section 5.11. This enables us to use regular sensor components with an alternative mechanical format.

10.17. What's the largest IncOder you can build?
595mm outer diameter. Contact Zettlex or your local representative (see Section 11) for larger sizes.

10.18. Do IncOders require an Export License?
Not usually. IncOders are exempt from Annex I to Council Regulation (EC) No. 428/2009, as amended [EU Dual-Use List] and only require an export license if the diameter is greater than or equal to 1000mm or accuracy is <1arc-second. No standard products are in this class.

10.19. How does Zettlex manage the obsolescence of electronic components?
Zettlex has detailed obsolescence policies and procedures as part of our Quality Management System. Generally, our policy is only to use electronic components which are widely used; available from a variety of sources and have low likelihood of obsolescence. In the event of an electronic component becoming obsolete we typically select, specify and, if necessary, qualify a suitable form, fit & functional alternative.

10.20. Can IncOders be used submerged in oil or water?
Yes. All units can be used in mineral oil. Use integral axial cable connections for submersion in water together with Extended Range Product Option C. If submersion is at depth then also specify Extended Range Product Option C. If necessary, contact Zettlex for further information.

10.21. Does the accuracy of IncOders improve if the range is reduced?
Yes. Repeatability is unaffected but accuracy – in other words, linearity - improves as the range reduces. This can be advantageous in some applications where the range of motion is restricted, such as elevation controls in pointing devices which are often <90°. The following table shows the effect on quoted accuracy as scale reduces for all devices with a digital output:-

IncOder Size mm	Static accuracy. Ranges up to 360° arc-seconds	Static accuracy. Ranges up to 90° arc-seconds	Static accuracy. Ranges up to 60° arc-seconds	Static accuracy. Ranges up to 30° arc-seconds
75	125	95	65	50
90	98	86	61	50
100	80	70	50	50
125	65	65	50	30
150	50	40	40	30
175	50	40	40	30
200	50	40	30	20
225	45	40	30	20
250	40	40	30	20

The rate of improvement of static accuracy vs. range is not a simple linear function. This means that if your application's range is say 120° the quoted accuracy should be taken from the column 'up to 360°'. Similarly if your range is 45° the quoted accuracy should be taken from the column 'up to 60°'. For clarity, the above applies to all IncOders not just customised products with reduced scale.

10.22. Can we accurately calculate speed using an IncOder?
Yes. There are various approaches and the optimal approach depends on the nature of your application and how accurately speed is to be measured. Generally, 0-10V output IncOders are not suitable for speed calculation because they are typically only suitable for <1 revolution operation rather than continuous rotation. The first option is to use an IncOder with A/B pulses. The second option is to use a Duplex IncOder (INC-10) with an A/B pulse inner and an absolute angle outer. The third option is to use a device with an absolute angle output such as SPI or SSI, and where SPI1 or SSI4 product options are particularly advantageous. The approach for this third option is detailed in a separate document - please refer to Zettlex IncOder App Note – Calculating Speed. You can find this in the IncOder section of our web-site (www.zettlex.com) or ask your local Zettlex representative for a copy.

10.23. Does current consumption depend on supply voltage?
No - because we use linear voltage regulators in the IncOder stator.

11. Contact

Australia	Zettlex Ltd., UK, www.zettlex.com +44 (0) 1223 874444
Austria	Zettlex Hamburg Office, www.zettlex.com +49 (0) 40 82217 8935
Belarus	Aviton, Russia www.aviton.spb.ru +7 812 702 1001
Belgium	Zettlex Ltd., UK, www.zettlex.com +44 (0) 1223 874444
Brazil	Zettlex East Coast Office, Boston, USA, www.zettlex.com +1 (0) 857 203 8519
Canada	Zettlex Chicago Office, Chicago, www.zettlex.com +1 (0) 857 203 8519
China (NE & E)	Shanghai Mingcheng Control Technology Ltd. www.shmcct.com
China (SW)	Chongqing Fuleji www.fuleji.net +86 (0) 23 8890 6991
Czech Republic	Z.M.Systems, Slovakia, www.zettlex.com +44 1223 852452
Denmark	Zettlex Hamburg Office, www.zettlex.com +49 (0) 40 82217 8935
Finland	Zettlex Ltd., UK, www.zettlex.com +44 (0) 1223 874444
France	Zettlex Ltd., UK, www.zettlex.com +44 (0) 1223 874444
Germany	Zettlex Hamburg Office, www.zettlex.com +49 (0) 40 82217 8935
Romania	Z.M.Systems, Slovakia, www.zettlex.com +44 1223 852452
India	Zettlex Ltd., UK, www.zettlex.com +44 (0) 1223 874444
Indonesia	OptoCom, Malaysia, www.optocom.com.my +603 (0) 8706 6806
Israel	Zettlex Ltd., UK, www.zettlex.com +44 (0) 1223 874444
Italy	Servotecnica SpA, www.servotecnica.com, +39 (0) 362 4921
Japan	Midori Precision Ltd., Japan www.midori.co.jp +81 42 554 5650
Luxembourg	Zettlex Hamburg Office, www.zettlex.com +49 (0) 40 82217 8935
Malaysia	OptoCom, Malaysia, www.optocom.com.my +603 (0) 8706 6806
Mexico	Zettlex West Coast Office, San Mateo, www.zettlex.com +1 (0) 650 378 1257
Netherlands	Zettlex Ltd., UK, www.zettlex.com +44 (0) 1223 874444
New Zealand	Zettlex Ltd., UK, www.zettlex.com +44 (0) 1223 874444
Norway	Zettlex Ltd., UK, www.zettlex.com +44 (0) 1223 874444
Poland	Zettlex Ltd., UK, www.zettlex.com +44 (0) 1223 874444
Portugal	Milexia Ibérica, S.A.U, Spain, www.milexia.es, +34 (0) 917 216 630
Romania	Z.M.Systems, Slovakia, www.zettlex.com +44 1223 852452
Russia	Aviton, Russia www.aviton.spb.ru +7 812 702 1001
Singapore	OptoCom, Malaysia, www.optocom.com.my +603 (0) 8706 6806
Slovakia	Z.M.Systems, Slovakia, www.zettlex.com +44 1223 852452
South Africa	Zettlex Ltd., UK, www.zettlex.com +44 (0) 1223 874444
South Korea	SamJeong Automation www.sjautomation.com +82 (0) 31 469 3090
Spain	Milexia Ibérica, S.A.U, Spain, www.milexia.es, +34 (0) 917 216 630
Sweden	Zettlex Ltd., UK, www.zettlex.com +44 (0) 1223 874444
Switzerland	Zettlex Hamburg Office, www.zettlex.com +49 (0) 40 82217 8935
Thailand	OptoCom, Malaysia, www.optocom.com.my +603 (0) 8706 6806
USA (East)	Zettlex East Coast Office, Boston, USA, www.zettlex.com +1 (0) 857 203 8519
USA (Mid)	Zettlex Chicago Office, Chicago, www.zettlex.com +1 (0) 847 563 2314
USA (West)	Zettlex West Coast Office, San Mateo, www.zettlex.com +1 (0) 650 378 1257

All products available via your local reseller or from the Zettlex web-site at
http://www.zettlex.com

Message from Mark Howard, Zettlex General Manager:
Ours is a simple business ethic: hard work, honesty & great customer service. I hope you will find our products useful.

Zettlex UK Ltd.
Newton Court
Newton
Cambridge
CB22 7ZE
United Kingdom
Tel [+44] 01223 874444
Fax [+44] 01223 874111
Email info@zettlex.com
www.zettlex.com

Revision History - 4.11.3 to 4.11.4

- Note that changes are referenced to the original sections or pages in Rev 4.11.3
- Front page - revision & date updated
- Page 17 – typo corrected on drawing dimensions
- Page 25 – reference to axial connection added to dimensions
- Page 27 – Alocrom surface finish deleted
- Page 28 – Cold Temperature Option moved to page 27
- Page 31 – typo corrected on shock rating
- Page 45 – Alocrom surface finished deleted from Product Ordering Examples and Extended Range
- Page 53 – FAQ 10.20 answer edited
- Page 54 – list of partners updated
- This table updated. Also note that Price Lists and 2 page IncOder Product Guide updated.

While Zettlex provides application assistance personally, through our literature, web-site and partners, it is the customer's responsibility to determine the suitability of the product in the application.

Specifications may change without notice. Quoted data is derived from test, analysis or design similarity. The information provided by Zettlex in this Product Guide is believed to be accurate and reliable as of this printing, however, Zettlex assumes no responsibility for its use.

WARRANTY/REMEDY

Zettlex warrants goods of its manufacture as being free of defective materials and faulty workmanship for 1 year from date of purchase. Zettlex standard product warranty applies unless agreed otherwise by Zettlex in writing. Please refer to Zettlex or local representative for warranty details. If warranted goods are returned to Zettlex during the warranty period then Zettlex will repair or replace, at its option, without charge those items that it finds defective. The foregoing is the buyer's sole remedy and is in lieu of all other warranties, expressed or implied, including those of merchantability and fitness for a particular purpose. In no event shall Zettlex be liable for consequential, special or indirect damages.

WARNING. PERSONAL INJURY.

Do not use these products as safety or emergency stop devices or in any application where failure of the product could result in personal injury. Failure to comply to these instructions could result in death or serious injury.

WARNING. PERSONAL INJURY.

Do not use these products in any application where there is the potential for combustion or explosion with flammable gases, dust or liquids. Failure to comply to these instructions could result in death or serious injury.