Zettlex
Precision in the Extreme

LINTRAN™ Linear Position Transducers
Product Guide



No contacts, no bearings, no bushes, no fine wires…..just reliable measurements all day, every day.

Zettlex LINTRAN™ transducers are **non-contacting, absolute**, linear position measuring devices. They utilise a unique inductive technique and comprise two main components – a Target and a Stator. The Stator is longer than the Target and is powered with a DC electrical supply. An electrical output from the Stator shows the position of the Target relative to the Stator. The Target has no electrical connections and is arranged for displacement relative to the Stator.

Zettlex LINTRAN™ encoders are **sealed to IP67** and are ideally suited to harsh environments where electrical contacts or optical transducers would prove unreliable. The LINTRAN™ range offers a cost effective alternative to LVDTs, magnetostrictive devices or precision potentiometers. LINTRAN™ units **do not require precision mounting** and are **field programmable without a PC.**

Custom versions are available for OEMs with alternative temperature ranges, mechanical mounts, finer linearity etc. - simply contact Zettlex for further details.

Specification

Output type	Analogue
Full scale*	200, 300, 400, 500, 600, 700, 800mm *– other options for OEM quantities of >100units/year*
Measurement type	Absolute
Resolution	0.025% full scale (12 bit resolution)
Repeatability	0.050% full scale (±1 LSB)
Linearity	+/- 0.250% full scale *(finer linearity available as an option)*
Operating temp.	-40 to +85 Celsius
Output signal	4 - 20mA or 0 - 10VDC – *other options for OEM volumes*
Power supply	24VDC +/-20% with <50mA max.
Measurement update rate	1000Hz
Storage temperature	-40 to 100°C
EMC	Complies with EN61326 emissions & immunity
Temperature coefficient	<70ppm/K for 0-10V Output, <100ppm/K for 4-20milliamp
Ingress protection	IP67
Reverse polarity protection	Yes
Connector	Integral cable - multi-strand PVC sheathed cable 2m long

* Actual scale selectable down to 10% of full scale.

Dimensions *(Target shown in factory set zero position)*

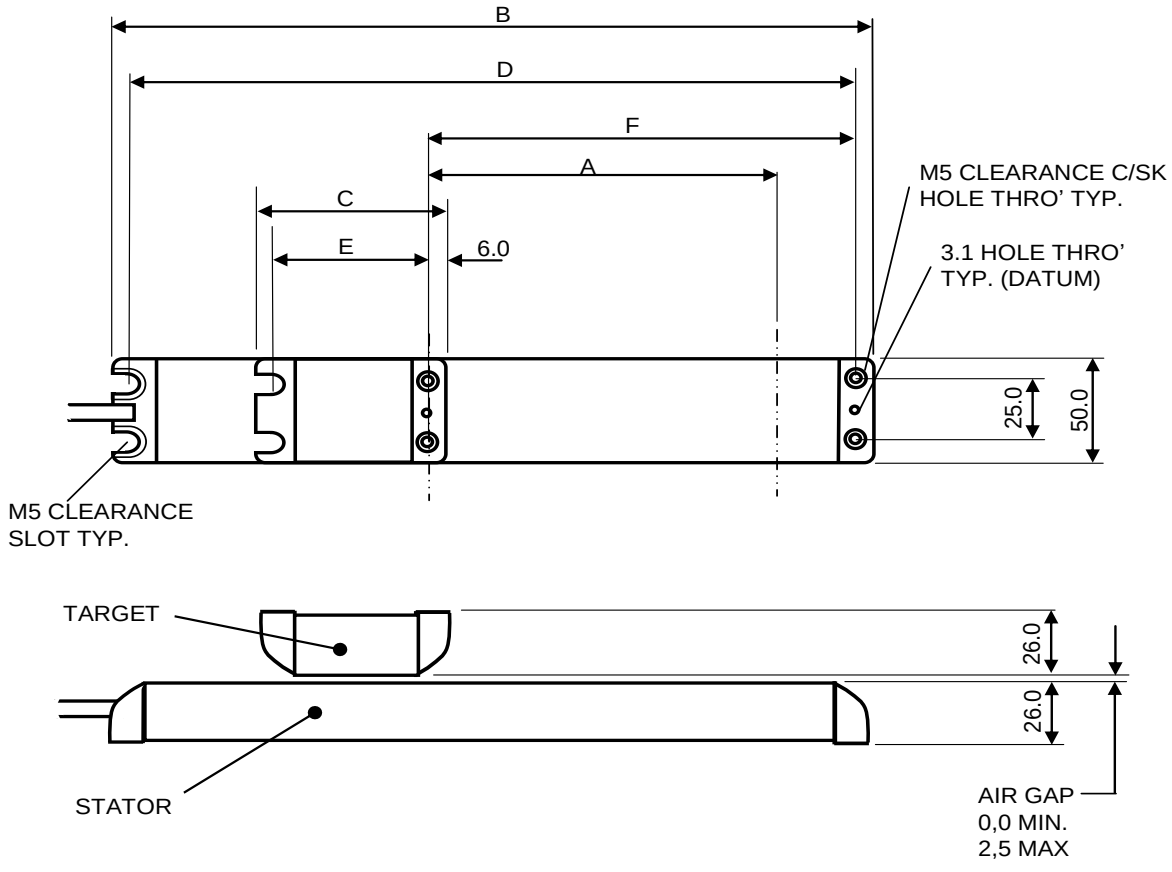

Model	A (Full Scale) mm	B±2 mm	C±2 mm	D±2 mm	E±2 mm	F±1 mm
ST-LINT-200	200	398.1	83.7	386.1	71.7	209.7
ST-LINT-300	300	530.1	102.5	518.1	90.5	316.5
ST-LINT-400	400	662.0	121.3	650.0	109.3	423.0
ST-LINT-500	500	794.2	138.6	782.2	126.6	530.5
ST-LINT-600	600	926.0	162.0	914.0	150.0	634.5
ST-LINT-700	700	1058.6	182.3	1046.6	170.3	740.9
ST-LINT-800	800	1190.4	202.6	1178.4	190.6	846.5

Electrical Interface

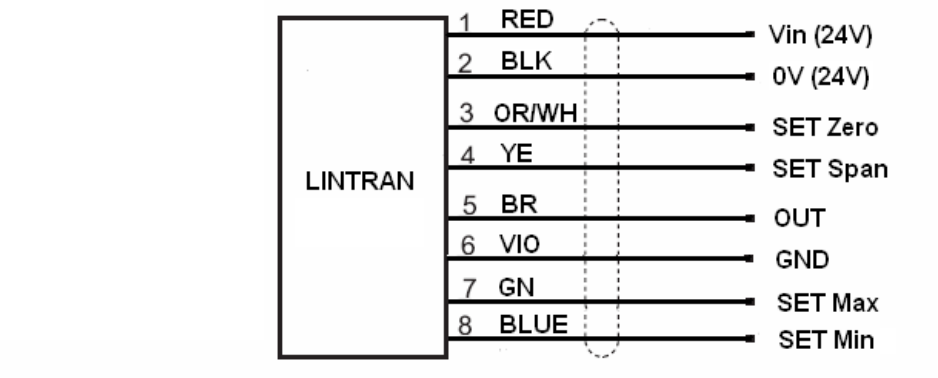

'Set Max' and 'Set Min' are factory settings and should not be connected without prior consultation with Zettlex LINTRAN factory settings are with 0% and 100% at the extremes of the measurement range.

NOTE - 0% or 100% can be at either end of actual stroke. Actual stroke can be any portion (>10%) of full-scale

To set an alternative 0% (0V or 4milliamp) of scale, power up the LINTRAN, then move the Target to the desired 0% position and connect Orange/White wire to 0V wire for >1 second.

To set an alternative 100% (10V or 20milliamp) of scale, power up the LINTRAN, then move the Target to the desired 100% position and connect Yellow wire to 0V wire for >1 second.

Once 0% and 100% are set, we recommend that the relevant wires are terminated and insulated.

Ordering code

ST-LINT-AAA-XXX-V1.0

AAA = Range – choose from 200, 300, 400, 500, 600, 700, 800 [mm]
XXX = Output – choose 010 for 0-10VDC or 420 for 4…20mA

Zettlex UK Ltd.
Newton Court
Newton
Cambridge
CB22 7PE
United Kingdom
Web www.zettlex.com
Email info@zettlex.com
Telephone +44 (0) 1223 874444
Fax +44 (0) 1223 874111

Change Record:
4.2 to 4.3 minor typographical changes only.

代理商：北京慧摩森电子系统技术有限公司
地址：北京市朝阳区幺家店路甲1号玲珑文创园106
电话：010-62311872
传真：010-62316782
邮箱：sales@bjsm.com.cn