IGBT
1200V 100A
IGBT PIM3 Module
QX100FS12P3

General Description

KunSemi QX100FS12P3 is a 1200V 100A IGBT Power Module, provides ultra low conduction loss as well as short circuit ruggedness. They are designed for the applications such as motor drive and solar energy.

Features

- Low $V_{CE(sat)}$ Trench IGBT technology
- 10μs short circuit capability
- $V_{CE(sat)}$ with positive temperature coefficient
- Maximum junction temperature 175℃
- Low inductance case
- Isolated copper baseplate using DBC technology

Applications

- Solar energy application
- Inverter for motor drive
- Uninterruptible power supply
- Hybrid and electric vehicle

Package



PIM3

QX100FS12P3 Summary

Symbol	Value
V_{CES}	1200V
I_C@T_C = 100℃	100A

Equivalent Schematic

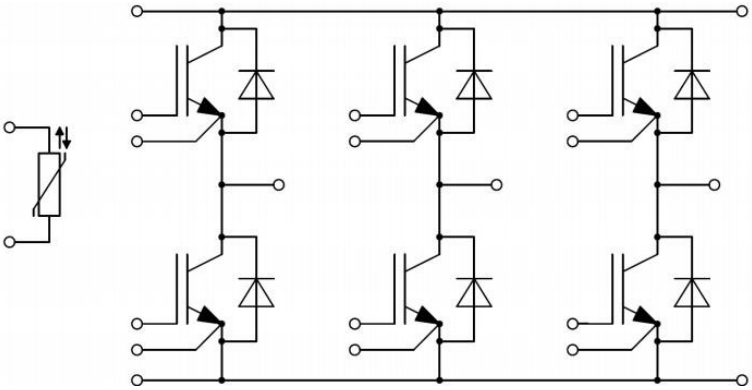

Maximum Ratings (T_C = 25℃ unless otherwise specified)

Symbol	Description		Value	Unit
IGBT				
V_{CES}	Collector-Emitter Voltage		1200	V
V_{GES}	Gate-Emitter Voltage		±20	V
I_C	Collector Current	@ T_C = 25℃	200	A
		@ T_C = 100℃	100	A
I_{CM}	Pulsed Collector Current t_p = 1ms		200	A
P_D	Maximum Power Dissipation @ T_j = 175℃		843	W
Diode				
V_{RRM}	Repetitive Peak Reverse Voltage		1200	V
I_F	Diode Continuous Forward Current		100	A
I_{FM}	Diode Maximum Forward Current t_p = 1ms		200	A
Module				
T_{jmax}	Maximum Junction Temperature		175	℃
T_{jop}	Operating Junction Temperature		-40 to +150	℃
T_{STG}	Storage Temperature Range		-40 to +125	℃
V_{ISO}	Isolation Voltage RMS, f = 50Hz, t = 1min		4000	V

Electrical Characteristics（T_C = 25℃ unless otherwise specified）

Symbol	Description	Conditions	Min	Typ	Max	Unit
IGBT						
$V_{CE(sat)}$	Collector to Emitter Saturation Voltage	I_C = 100A, V_{GE} = 15V, T_j = 25℃		1.92	2.33	V
		I_C = 100A, V_{GE} = 15V, T_j = 125℃		2.16		
		I_C = 100A, V_{GE} = 15V, T_j = 150℃		2.21		
$V_{GE(th)}$	Gate-Emitter Threshold Voltage	I_C = 2.5mA, V_{CE} = V_{GE}, T_j = 25℃	5.2	5.8	6.8	V
I_{CES}	Collector Cut-Off Current	V_{CE} = V_{CES}, V_{GE} = 0V, T_j = 25℃			1	mA
I_{GES}	Gate-Emitter Leakage Current	V_{GE} = V_{GES}, V_{CE} = 0V, T_j = 25℃			100	nA
R_{Gint}	Internal Gate Resistance			0.78		Ω
C_{ies}	Input Capacitance	V_{CE} = 30V, f = 1MHz, V_{GE} = 0V		10.4		nF
C_{res}	Reverse Transfer Capacitance			0.5		nF
Q_G	Gate Charge	V_{GE} = -15…+15V		2.33		μC
$t_{d(on)}$	Turn-On Delay Time	V_{CC} = 600V, I_C = 100A, R_G = 2.2Ω, V_{GE} = ±15V, L_S = 16μH, T_j = 25℃		17.3		ns
t_r	Rise Time			13.4		ns
$t_{d(off)}$	Turn-Off Delay Time			153.3		ns
t_f	Fall Time			90.2		ns
E_{on}	Turn-On Switching Loss			7.7		mJ
E_{off}	Turn-Off Switching Loss			3.4		mJ
$t_{d(on)}$	Turn-On Delay Time	V_{CC} = 600V, I_C = 100A, R_G = 2.2Ω, V_{GE} = ±15V, L_S = 16μH, T_j = 125℃		21.1		ns
t_r	Rise Time			15.1		ns
$t_{d(off)}$	Turn-Off Delay Time			176.6		ns
t_f	Fall Time			160.3		ns
E_{on}	Turn-On Switching Loss			12.2		mJ
E_{off}	Turn-Off Switching Loss			4.8		mJ
$t_{d(on)}$	Turn-On Delay Time	V_{CC} = 600V, I_C = 100A, R_G = 2.2Ω, V_{GE} = ±15V, L_S = 16μH, T_j = 150℃		20.8		ns
t_r	Rise Time			15.4		ns
$t_{d(off)}$	Turn-Off Delay Time			185.3		ns
t_f	Fall Time			310.4		ns
E_{on}	Turn-On Switching Loss			12.7		mJ
E_{off}	Turn-Off Switching Loss			7.3		mJ
I_{SC}	SC Data	$t_P \leq 10\mu s$, V_{GE} = 15V, T_j = 150℃, V_{CC} = 900V, $V_{CEM} \leq 1200V$		400		A

Symbol	Description	Conditions	Min	Typ	Max	Unit
Diode						
V_F	Diode Forward Voltage	I_F = 100A, V_{GE} = 0V, T_j = 25℃		2.23	2.35	V
		I_F = 100A, V_{GE} = 0V, T_j = 125℃		2.25		
		I_F = 100A, V_{GE} = 0V, T_j = 150℃		2.22		
Q_r	Recovered Charge	V_{CC} = 600V, I_F = 100A, -di/dt = 5700A/μs, L_S = 16μH, V_{GE} = -15V, T_j = 25℃		7.5		μC
I_{RM}	Peak Reverse Recovery Current			55.9		A
E_{rec}	Reverse Recovery Energy			2.3		mJ
Q_r	Recovered Charge	V_{CC} = 600V, I_F = 100A, -di/dt = 5090A/μs, L_S = 16μH, V_{GE} = -15V, T_j = 125℃		16.3		μC
I_{RM}	Peak Reverse Recovery Current			68.5		A
E_{rec}	Reverse Recovery Energy			5.6		mJ
Q_r	Recovered Charge	V_{CC} = 600V, I_F = 100A, -di/dt = 5110A/μs, L_S = 16μH, V_{GE} = -15V, T_j = 150℃		18.8		μC
I_{RM}	Peak Reverse Recovery Current			73.5		A
E_{rec}	Reverse Recovery Energy			6.5		mJ
NTC						
R_{25}	Rated Resistance			5.0		kΩ
ΔR/R	Deviation of R_{100}	T_C = 100℃, R_{100} = 493.3Ω	-5		5	%
P_{25}	Power Dissipation				20.0	mW
$B_{25/50}$	B-value	$R_2 = R_{25}\exp[B_{25/50}(1/T_2-1/(298.15K))]$		3375		K
$B_{25/80}$	B-value	$R_2 = R_{25}\exp[B_{25/80}(1/T_2-1/(298.15K))]$		3411		K
$B_{25/100}$	B-value	$R_2 = R_{25}\exp[B_{25/100}(1/T_2-1/(298.15K))]$		3433		K
Module						
L_{CE}	Stray Inductance			21		nH
$R_{CC'+EE'}$	Module Lead Resistance, Terminal to Chip			1.80		mΩ
R_{thJC}	Junction-to-Case (per IGBT)				0.178	K/W
	Junction-to-Case (per Diode)				0.203	
R_{thCH}	Case-to-Heatsink (per IGBT)			0.152		K/W
	Case-to-Heatsink (per Diode)			0.271		
	Case-to-Heatsink (per Module)			0.016		
M	Mounting Torque:Screw M5		3.0		6.0	N.m
G	Weight of Module			310		g

Typical Performance

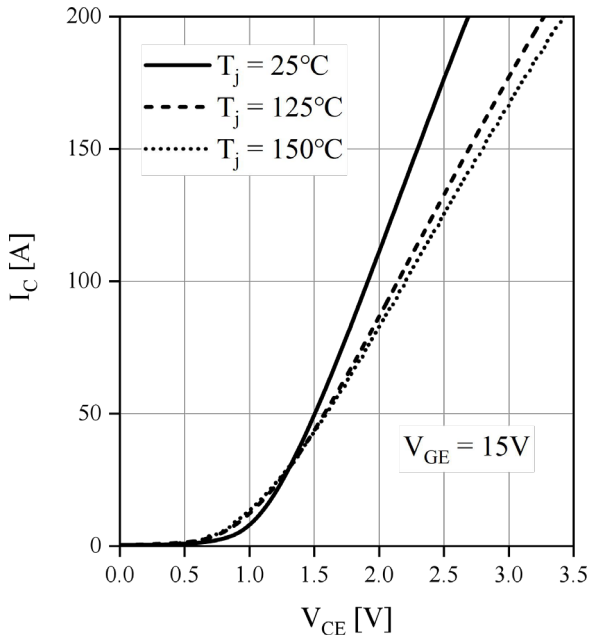

Figure 1: IGBT Output Characteristics

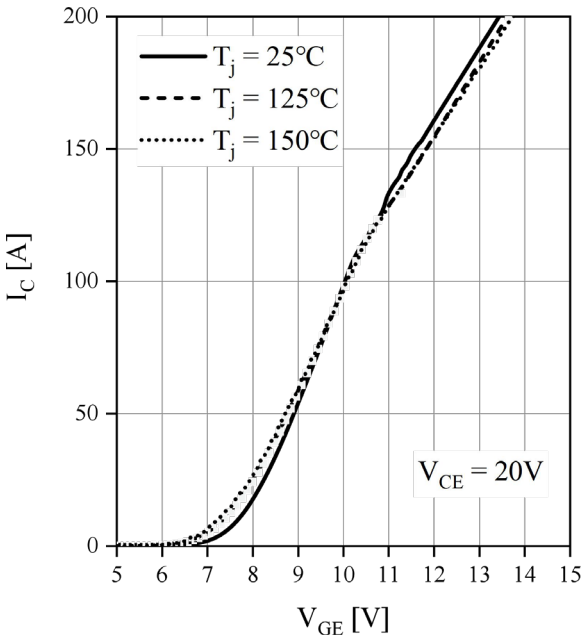

Figure 2: IGBT Transfer Characteristics

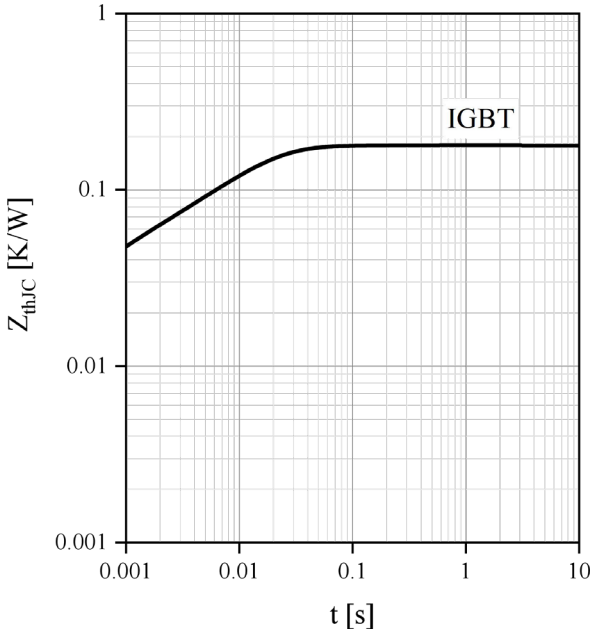

Figure 3: IGBT Transient Thermal Impedance

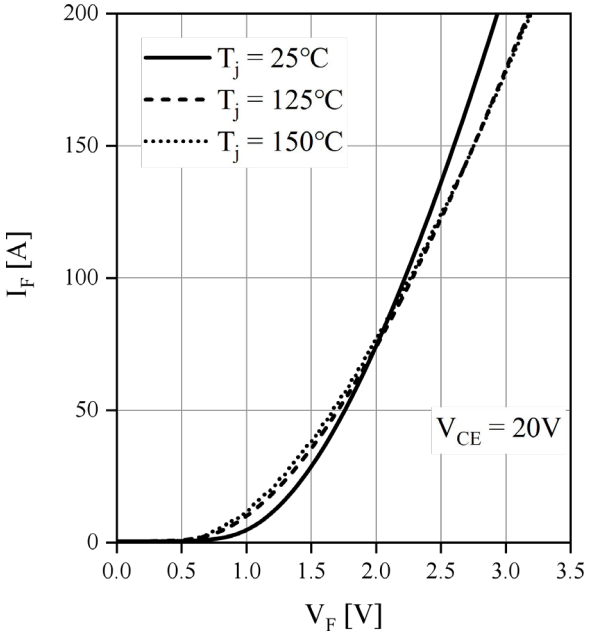

Figure 4: Diode Forward Characteristics

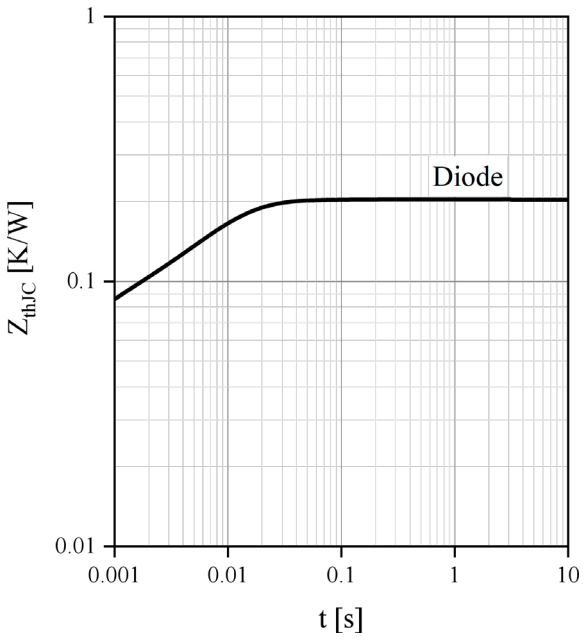

Figure 5: Diode Transient Thermal Impedance

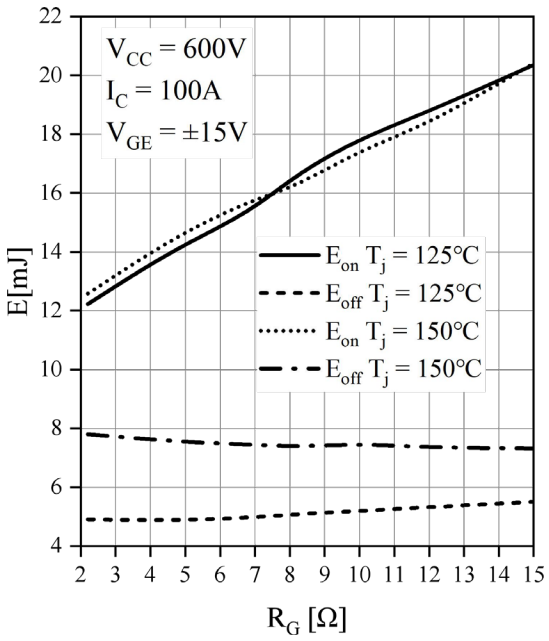

Figure 6: IGBT Switching Loss vs. R_G

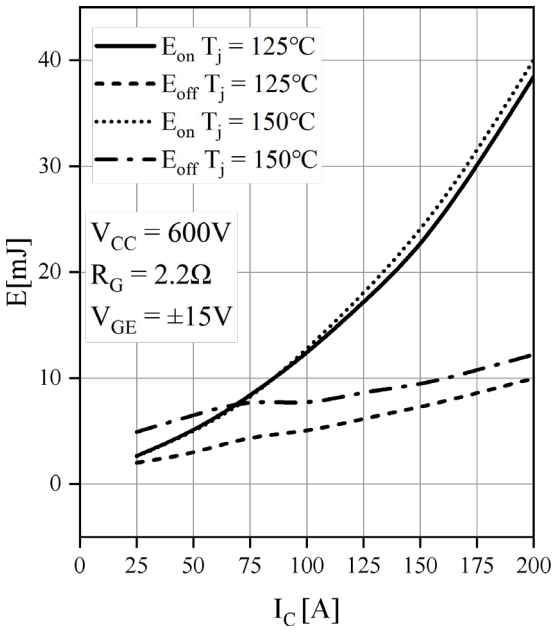

Figure 7: IGBT Switching Loss vs. I_C

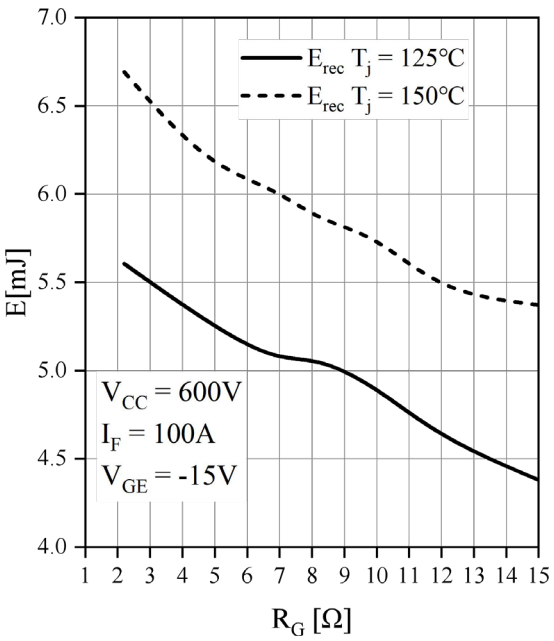

Figure 8: Diode Switching Loss vs. R_G

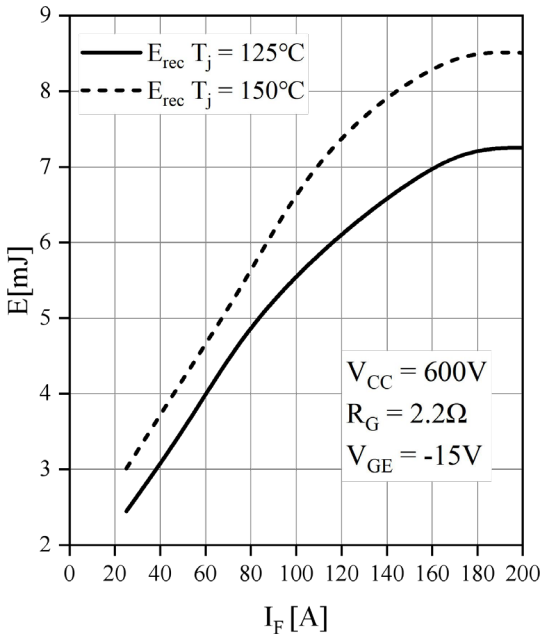

Figure 9: Diode Switching Loss vs. I_F

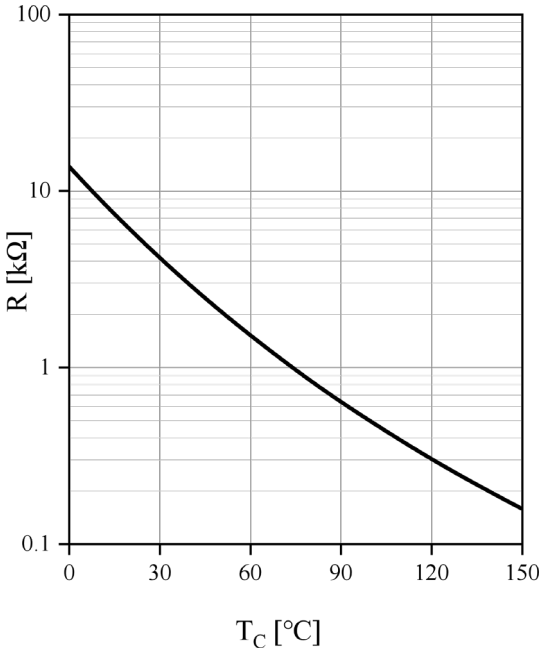

Figure 10: NTC Temperature Characteristic

Circuit Schematic

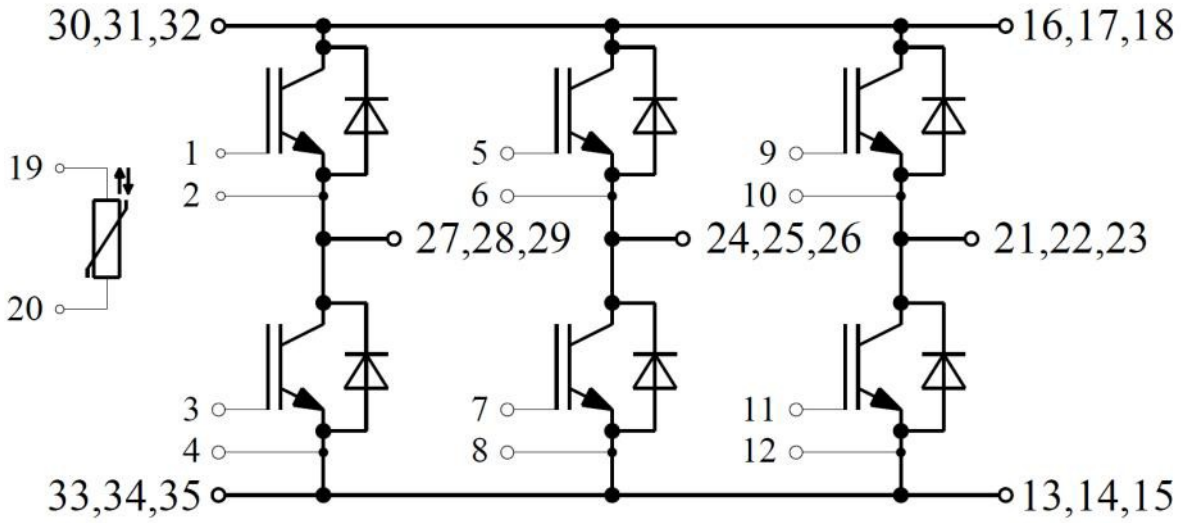

Package Dimensions

Dimensions in Millimeters

