USER MANUAL

ILI-SA02-6C (2021-12)

300W □□□□□□



Read this manual before installation or operation. Keep it with the fixture for future reference.

Document generated from the supplied ILI instruction manual and specification sources.

1. Introduction

Thank you for purchasing our product. Before carrying out any operations with the product, carefully read this instruction manual and keep it with cure for future reference. It contains important information about the installation, usage and maintenance of the unit. Please strictly follow it.

The product conforms to the international standard DMX512 agreement. The products can be controlled in signal use and also can be controlled in many units. Sleek and stylish, precise and accurate optical system design, bring and clear light effects. All above makes our products applicable to be used within the scope of film and television, theater, live events, trade show exhibits, educational facilities, retail environments, and corporate shows, etc.

* The product is compliance with the CE & ROHS Standard.

* The product belongs to our company. The intellectual property is exclusively reserved. We will file a lawsuit on condition that it is illegally copied and imitated.

Safety instructions

WARNING

Do not open this device, there is no user-serviceable parts inside. Risk of electric shock.

Do not look at the light source when the device is on.

CAUTION: This unit's housing may be hot during and after operation.

Install this device in a location with adequate ventilation, at least 20 inch (50 cm) from adjacent surfaces.

Do not leave any flammable material within 50 cm of this unit while operating or connected to power.

Use a safety chain when mounting this device overhead.

Do not operate this device outdoors or in any location where dust, excessive heat, water, or humidity may affect it.

Do not operate this device if the housing, lenses, or cables appear damaged.

Do not connect this device to a dimmer or rheostat.

ONLY connect this device to a grounded and protected circuit.

ONLY use the hanging bracket to carry this device.

In case of a serious operating problem, stop using immediately.

The maximum ambient temperature is 104° F (40° C). Do not operate this device at higher temperatures.

3. Description

Product features

Made by Aluminum which makes the lamp solid

Good performance of cooling system with the quiet fan

DMX controlled operation, possible work with any commercial DMX512 controller

Rail-type hanging bracket, bracket position can be adjusted

Different dimmer curves and dimmer speed adjustable

Flicker free projection

Rotatable barn doors, color filter optional

Ready for connection with power cord with safety-plug

Overview

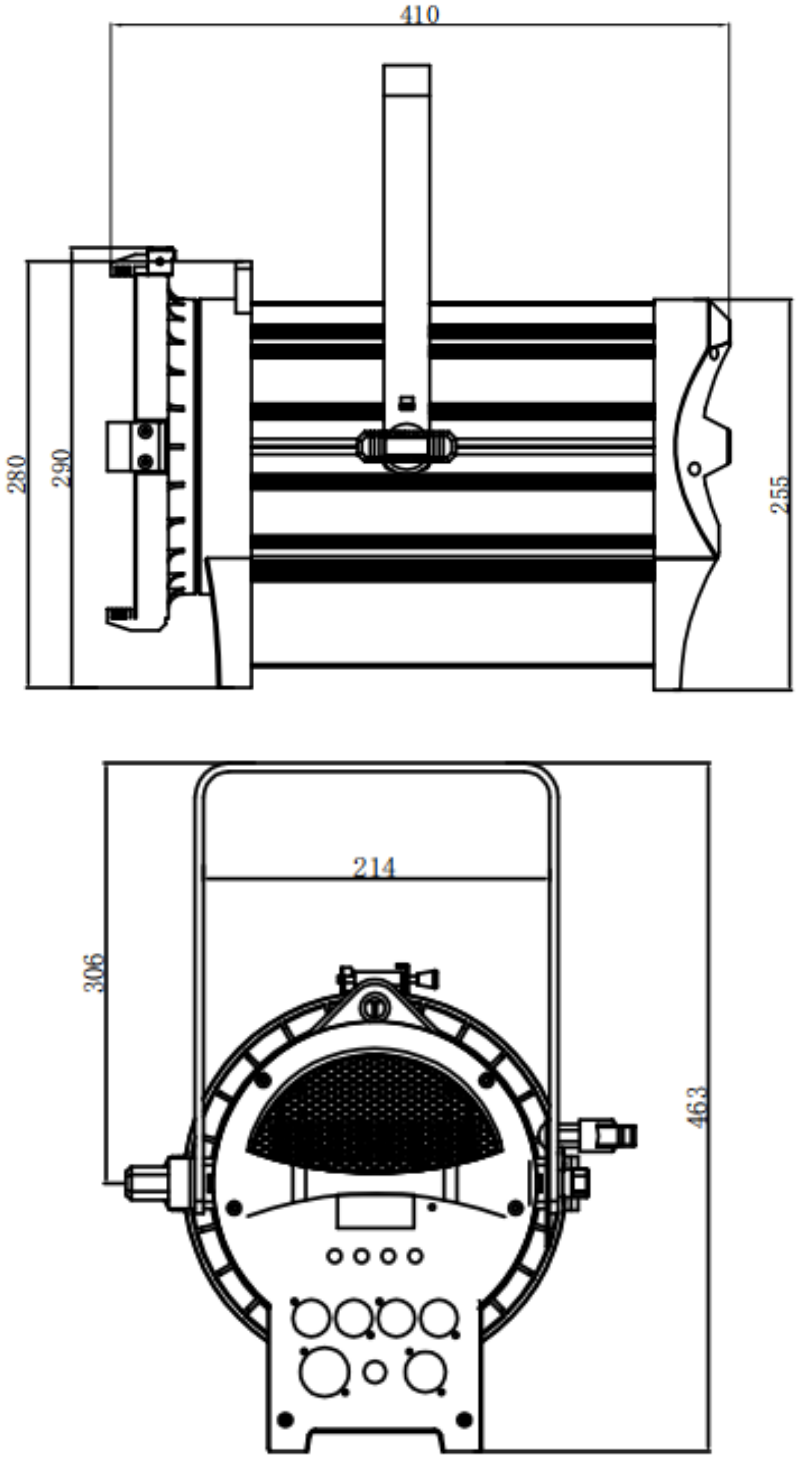

Installation

This device can be mounted in many orientations provided each individual device is secured by the use of correct mounting bracket.

Overhead rigging

The installation of the device has to be built and constructed in a way that it can hold 10 times the weight for 1hour without any harming deformation.

The installation must always be secured with a secondary safety attachment. This secondary safety attachment must be constructed in a way that no part of the installation can fall down if the main attachment fails.

The operator has to make sure that safety-relating and machine-technical installations are approved by an expert and before taking into operation for the first time and after changes .

Please note: for overhead rigging in public or industrial areas, a series of safety instructions have to be followed that this manual can only give in part.

DMX512 connection

Please use XLR-XLR signal cable connect the DMX output of the controller with the DMX input of the first device, and connect the DMX output of the first device with the DMX input of the second device, always connect one output with the input of the next device until all devices are connected.

For better signal receival, a signal amplifier suggest to be used for each 20 fixtures.

Power input

This device has an auto-switching power supply work with input voltage range of 100-240V AC, 50/60Hz. Link up to the maximum 8A, Do not exceed this.

Operation

Control board

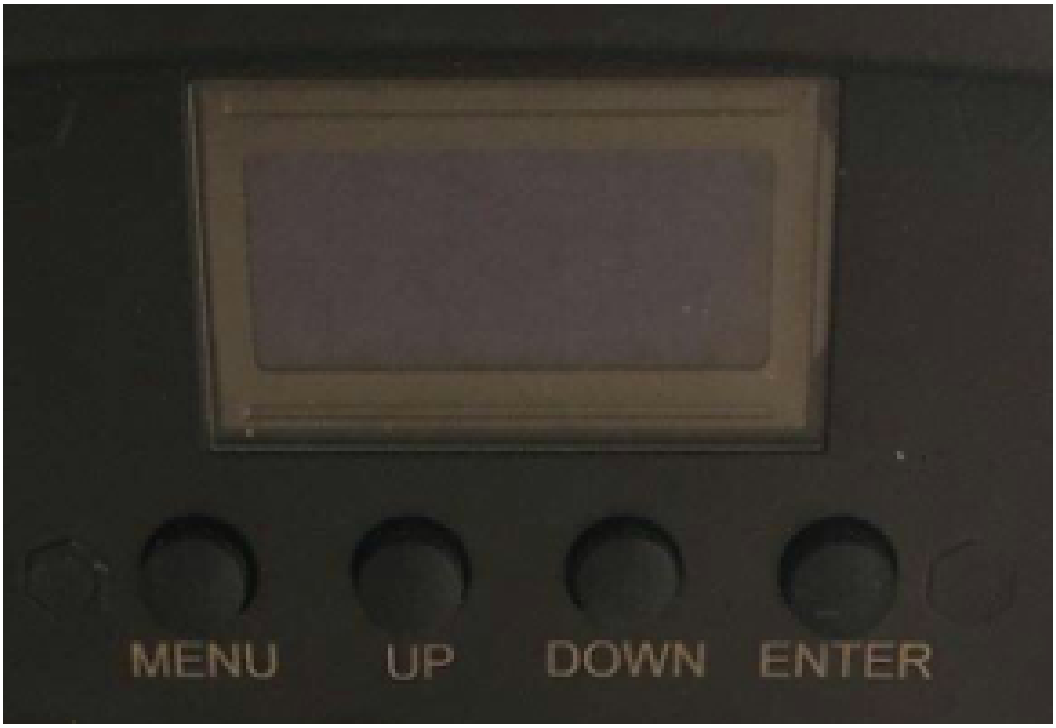

Press the Menu until one of the following had been displayed:

MENU	MENU	MENU	MENU	MENU
1st menu	2nd menu	3rd Menu	Value	Note
DMX	ADDRESS	addr:	1-512	DMX512 address
DMX	CONTROL MODE	10-CH		10 channels
DMX	CONTROL MODE	11-CH		11 channels
DMX	CONTROL MODE	8H-CH		8 channels HSIC mode
DMX	CONTROL MODE	9H-CH		9 channels HSIC mode
DMX	CONTROL MODE	18-CH		18 channels
STATIC	RED	RED	0 - 255	Red dimmer
STATIC	GREEN	GREEN	0 - 255	Green dimmer
STATIC	BLUE	BLUE	0 - 255	Blue dimmer
STATIC	AMBER	AMBER	0 - 255	Amber dimmer
STATIC	CYAN	CYAN	0 - 255	Cyan dimmer
STATIC	LIME	LIME	0 - 255	Lime dimmer
STATIC	STROBE	STROBE	0 - 255	Strobe
STATIC	ZOOM	ZOOM	0 - 255	Zoom

MENU	MENU	MENU	MENU	MENU
PERSONALITY	CURVE	LINEAR		
PERSONALITY	CURVE	SQUARE LAW		
PERSONALITY	CURVE	INV SQUARE LAW		
PERSONALITY	CURVE	S-CURVE		
PERSONALITY	SPEED	OFF		Fade off
PERSONALITY	SPEED	LOW		Low
PERSONALITY	SPEED	MEDIUM		Medium
PERSONALITY	SPEED	HIGH		High
PERSONALITY	FREQUENCY	1000Hz		
PERSONALITY	FREQUENCY	1200Hz		
PERSONALITY	FREQUENCY	1500Hz		
PERSONALITY	FREQUENCY	2000Hz		
PERSONALITY	FREQUENCY	4000Hz		
PERSONALITY	FREQUENCY	8000Hz		
PERSONALITY	FAN MODE	FULL		Fans max
PERSONALITY	FAN MODE	AUTO		Fan control by temperature
PERSONALITY	FAN MODE	SILENT		
PERSONALITY	DMX HOLD	Hold		
PERSONALITY	DMX HOLD	Blackout		
INFO	VERSION		V102.1	version
INFO	RDM UID		xxxxxxxxxxx	RDM Uniquer Id
INFO	USAGE TIME	POWER ON	xxxxxH	
INFO	USAGE TIME	LED TOTAL	xxxxxH	
INFO	TEMPERATURE	CELSIUS		
INFO	TEMPERATURE	FAHRENHEIT		Temperature
RESET	YES/NO			Reset

Use 'Up' and 'Down' button to select your desired operation, press 'Enter' to set all function

Notes:

When there's a flickering '!' sign appeared, means no signal input for the fixture.

No operation within 30seconds, LCD display will enter into Screen protection mode automatic.

When the current temperature is higher than the protecting setting temperature, 30% of power consumption will be deducted slowly; Power consumption will be coming to normal when the temperature gets to normal.

DMX Modes

DMX512 Channel table

CHANNEL MODES	CHANNEL MODES	CHANNEL MODES	CHANNEL MODES	CHANNEL MODES	VALUE	FUNCTION
10-CH	11-CH	8H-CH	9H-CH	18-CH	VALUE	FUNCTION
1	1	1	1	1	000 - 255	Master Dimmer
			2	2	000 - 255	Master Dimmer fine
2	2			3	000 - 255	Red
				4	000 - 255	Red fine
3	3			5	000 - 255	Green
				6	000 - 255	Green fine
4	4			7	000 - 255	Blue
				8	000 - 255	Blue fine
5	5			9	000 - 255	Amber
				10	000 - 255	Amber fine
6	6			11	000 - 255	Cyan

CHANNEL MODES	CHANNEL MODES	CHANNEL MODES	CHANNEL MODES	CHANNEL MODES	VALUE	FUNCTION
				12	000 - 255	Cyan fine
7	7			13	000 - 255	Lime
				14	000 - 255	Lime fine
		2	3		000 - 255	Hue
		3	4		000 - 255	Hue fine
		4	5		000 - 255	Saturation
8	8	5	6	15	000 - 096	2000K - 2800K
8	8	5	6	15	097 - 098	2800K
8	8	5	6	15	099 - 112	2800K - 3000K
8	8	5	6	15	113 - 114	3000K
8	8	5	6	15	115 - 126	3000K - 3200K
8	8	5	6	15	127 - 129	3200K
8	8	5	6	15	130 - 169	3200K - 4000K
8	8	5	6	15	170 - 171	4000K
8	8	5	6	15	172 - 218	4000K - 5600K
8	8	5	6	15	219 - 220	5600K
8	8	5	6	15	221 - 226	5600K - 6000K
8	8	5	6	15	227 - 228	6000K
8	8	5	6	15	229 - 254	6000K - 10000K
8	8	5	6	15	255	10000K
9	9	6	7	16	000 - 255	Zoom
10	10	7	8	17		Strobe
10	10	7	8	17	000 - 005	No function
10	10	7	8	17	006 - 255	Strobe slow to fast
	11	8	9	18	000 - 030	Fade off
	11	8	9	18	031 - 060	Low
	11	8	9	18	061 - 090	Medium
	11	8	9	18	091 - 255	High

6. Fuse Replacement

If the fine-wire fuse of the device fuses, only replace the fuse by a fuse of same type and rating. Before replacing the fuse, unplug mains lead.

Procedure:

Step1: Unscrew the fuse holder on the rear panel with a fitting screwdriver from the housing (anticlockwise).

Step 2: Remove the old fuse from the fuse holder.

Step 3: Install the new fuse in the fuse holder.

Step 4: Replace the fuse holder in the housing and fix it.

Technical specifications

Product name.:	Led Spotlight
Power Consumption:	300W
Voltage:	100 - 240V AC
Frequency:	50/60Hz
Light Source:	RGBACL led module
Lens:	175mm Fresnel lens
Color temperature:	2700K-10000K
CRI:	>90
Beam Angle:	14°-55°

Product name.:	Led Spotlight
Dimming Range:	16 bit smooth dimming 0-100%
DMX Channel:	10 CH/11 CH/8 CH/9 CH/18 CH Optional
Control system:	DMX512 signal
Display Screen:	4-Button LCD Screen
IP Rating:	IP20
Min. Distance to Illuminated object:	1M
Ambient Temp.:	-15°C-35°C
Product size:	410x463x214mm
Weight:	10kg