PROFESSIONAL LIGHTING

ILI-SA02-6C (2021-12)

300W □□□□□□



Key specification	Value
Power	300W full on
Light source	Red,Green,Blue,Amber,Lime,Cyan LED module
Color temperature	2700K-10000K CCT adjustable
CRI	Up to 97
Beam angle	14°~55°
DMX modes	10-CH,11-CH,8H-CH,9H-CH,18-CH optional

Technical specifications

Specification	Value
Product information	Product information
Product model	ILI-SA02-6C (2021-12)
Power voltage	100 - 240V AC, 50/60Hz
Rated power	300W full on
LED light source	Red,Green,Blue,Amber,Lime,Cyan LED module
LED lifespan	50000 Hours
Color temperature	2700K-10000K CCT adjustable
CRI	Up to 97
Optical system	Glass lens set+ 175 mm Fresnel lens
Dimming	16 bits 0-100%, 4 dimmer curves optional, dimmer speed optional
Color control	HSIC colour control of the led array for easy access to any desired colour
FREQUENCY	PWM dimming frequency 1K-8K optional
Beam angle	14°~55°
Focus	Motor focus
Control system	DMX512, RDM, Manual
Signal input&output	XLR3+XLR5
Channels	10-CH,11-CH,8H-CH,9H-CH,18-CH optional
Display Screen	4-Button OLED display
Cooling system	Silent fan, intelligent automatic temperature regulation system, 3 fan modes optional
Ambient environment	-10°C-40°C
Tilt angle	±90°
Protection class	IP23
Certification	CE,ROHS
Accessories optional	Four-leaf barndoor, safety cable, C-clamp
Body material	Die-cast aluminum
Body color	Black
Fixture weight	10kg

Fixture dimensions

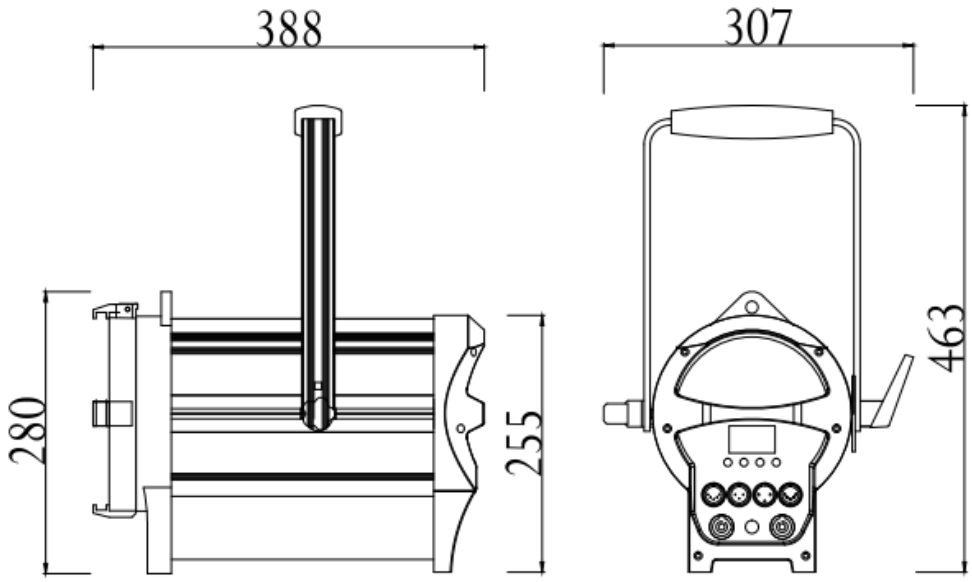

Dimensions reproduced from the supplied product documentation. All units follow the source drawing.

Specifications are subject to production configuration and should be verified against the fixture label before installation.